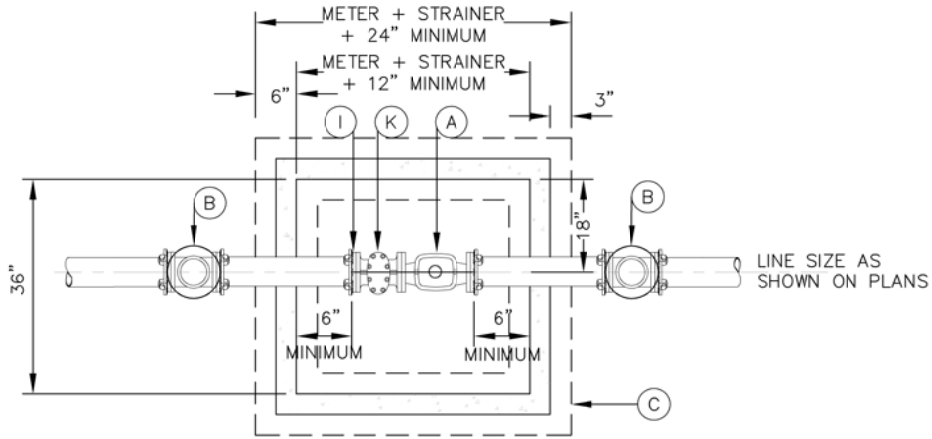

PLAN

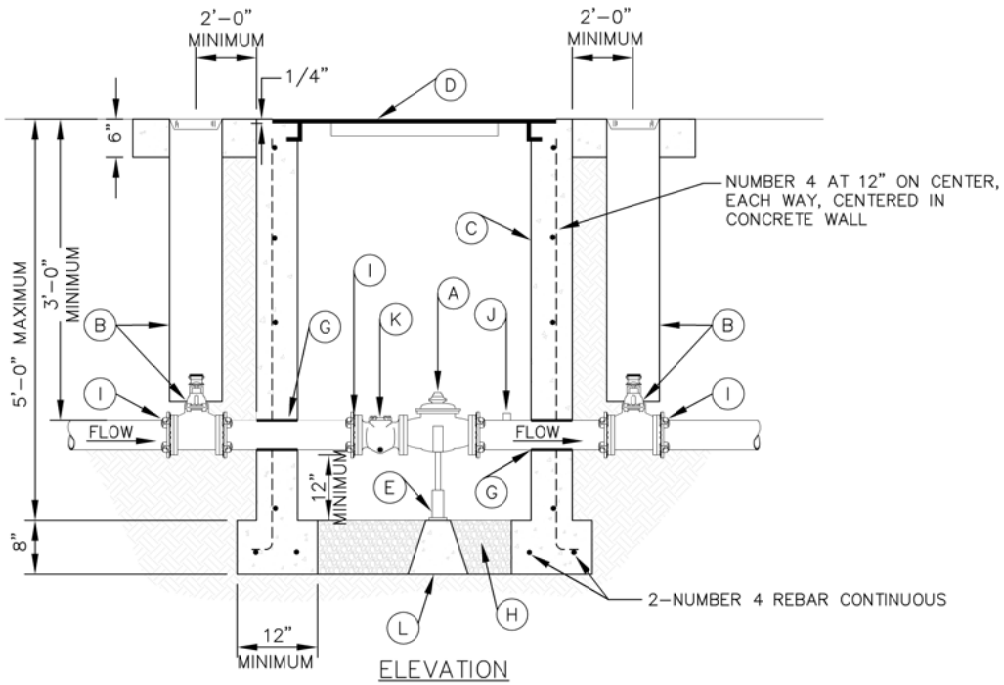

ELEVATION

GENERAL CONSTRUCTION NOTES:

1. DETAIL IS FOR METERS FROM 3" TO 6". FOR LARGER METERS SEE THE CITY OF RIO RANCHO UTILITIES OPERATION DIVISION.
2. BYPASS SHALL BE PROVIDED ONLY IF DIRECTED BY THE CITY OF RIO RANCHO.

KEYED NOTES:

A. WATER METER.
B. GATE VALVE (FLANGE BY FLANGE) WITH 6" DIMENSION RATIO-18 POLYVINYL CHLORIDE PIPE AND COVER PER DWG. W-05.
C. PRECAST CONCRETE OR POURED IN PLACE CONCRETE VAULT, f'c=3,000 POUNDS PER SQUARE INCH.
D. ALUMINUM ACCESS DOOR, FRAME CAST IN CONCRETE, HINGED AND LOCKABLE WITH SAFETY CATCH.
E. ADJUSTABLE PIPE SADDLE STAND AND FOUNDATION OR
F. BLOCKING AT METER CONNECTIONS.
G. NON-SHRINK GROUT.
H. CLEAN PEA GRAVEL.
I. FLANGE ADAPTER (TYPICAL OF 6).
J. 2" OUTLET, CAPPED OR PLUGGED (TEST PORT).
K. STRAINER MATCHING METER SIZE.
L. CONCRETE SUPPORT BLOCK.

DATE MODIFIED: OCTOBER 2017

City of Rio Rancho
Department of Public Works

METER INSTALLATIONS
SIZES 3" THROUGH 6"

DWG. NO. W-09 APRIL 22, 2016