BID DOCUMENTS
FOR

IFB 20-PR-029
Construction of a New Senior Center

CORR Project – PR1885

CITY OF RIO RANCHO, NEW MEXICO

April 2020

PREPARED BY:

City of Rio Rancho
Department of Finance/Purchasing Division
3200 Civic Center Circle, NE
Rio Rancho, New Mexico 87144
Telephone: (505) 891-5044

TABLE OF CONTENTS

DESCRIPTION	PAGE(S)
Advertisement for Bid	3
Instructions to Bidders	4 to 20
Acknowledgment Form	21
Notice to Contractors	22 to 26
Supplementary Conditions	27 to 35

Bid Submission Packet

Bid submission packet must include the following items:

• Bid Submission Cover Page	36
• Bid Form	37 to 40
• Bidder's Listing of Subcontractors for Compliance with Subcontractor's Fair Practices Act	41
• Bid Bond	42 to 43
• Local/Area/Resident/Resident Veteran/Recycled Content Goods Preference Certification Form	44 to 46
• Resident Veteran Preference Certification	47
• EEOC Form	48
• Non-Collusion Affidavit	49

Project Specifications and Attachments

Wage Rate Determination	(As Attached)
Exhibit 1 – Executed Ground Lease between UNM and City of Rio Rancho	(As Attached)
Project Manual, Specifications, Geo-Technical Report and Drawings/Plan Set	(As Attached)
Draft AIA Document A101 – 2007 – Standard Form Agreement	(As Attached)
2007 AIA Document A201 General Conditions for the Contract for Construction	(As Attached)

CITY OF RIO RANCHO
IFB 20-PR-029
Construction of a New Senior Center

Due to the current health concerns and the changing environment in respect to COVID-19 the City is requesting all bid submissions be submitted via email to sybarra@rrnm.gov on May 14, 2020 no later than 10:00 AM Local Time. The City will conduct the public bid opening and reading of bids received via the GoToMeeting service. A link will be provided on the City's website. Bidders must submit their original bid in a sealed envelope or container via USPS or other mailing service no later than May 19, 2020 to the address specified in the bid document.

Project Description:
The City of Rio Rancho is soliciting formal bids for the construction of a 7,500 square foot new Senior Center on approximately 3.85 acres of land located at 3241 Broadmoor Boulevard NE in Rio Rancho. Work shall include site grading and drainage improvements, building and parking lot construction with associated landscaping, utility line construction and extension per plan.

A pre-bid meeting will be held online through the GoToMeeting service at 10:30 a.m., Local Time, April 27, 2020. A link for the meeting will be provided on the City's website at: https://rrnm.gov/bids

Plans, Specifications and other Contract Documents, including instructions to Bidders and Bid Forms Files are available on the City of Rio Rancho's IFB/RFP Postings web page via the following link in electronic format only: https://rrnm.gov/bids. Bidders are asked to be patient while downloading these files from the website.

In addition, hardcopies of printed plan sets may be obtained at the Contractors own expense through Albuquerque Reprographics, 4716 McLeod NE, Albuquerque, NM 87109, (505) 884-0862 or Academy Reprographics, 8900-N San Mateo Blvd. NE, Albuquerque, NM 87113 (505) 821-6666.

This IFB is issued on behalf of the City of Rio Rancho by the Purchasing Division, which is the **SOLE POINT OF CONTACT** DURING THE PROCUREMENT PROCESS. Any inquires or requests during the procurement process shall be directed to the following point of contact:

Issuing Office:	City of Rio Rancho Purchasing and Contracts Division 3200 Civic Center Circle NE, Suite 300 Rio Rancho, NM 87144 Telephone: (505) 891-5044
Advertised:	April 21, 2020 – Albuquerque Journal

INSTRUCTIONS TO BIDDERS

1. **Defined Terms.**

Terms used in these Instructions to Bidders which are defined in the AIA Document A201™ General Conditions of the Contract for Construction ("General Conditions") have the meanings assigned to them in the General Conditions.

Certain additional terms used in these Instructions to Bidders have the meanings indicated below which are applicable to both the singular and plural thereof.

1.1 BIDDER — one who submits a Bid directly to OWNER as distinct from a sub–bidder, who submits a bid to a BIDDER.

1.2 Issuing Office –the office on behalf of which this IFB is issued by the City. The Issuing office is the **SOLE POINT OF CONTACT** during the procurement process. Any inquires or requests during the procurement process shall be directed to the issuing office.

1.3 Distribution Office — the office from which the Bidding Documents are to be distributed as indicated in the Advertisement for Bids or Invitation to Bid.

1.4 Successful Bidder — the responsible BIDDER offering the lowest, responsive bid to whom OWNER (on the basis of OWNER's evaluation as hereinafter provided) makes an award.

2. **Copies of Bidding Documents.**

2.1 Complete copies of Bidding Documents, except for the Standard Specifications, may be obtained from the Distribution Office as indicated in the Advertisement for Bids.

2.2 The Standard Specifications for this project are the State of New Mexico currently adopted Building Code and all City of Rio Rancho current standards. The City shall make such determinations as necessary as to which Standard Specifications govern and control in the event of a conflict, discrepancy, or request for clarification from the Contractor.

2.3 Complete sets of Bidding Documents must be used in preparing Bids; neither OWNER nor ARCHITECT assume any responsibility for errors or misinterpretations resulting from the use of incomplete sets of Bidding Documents.

2.4 OWNER and ARCHITECT in making copies of Bidding Documents available on the above terms do so only for the purpose of obtaining Bids for the Work and do not confer a license or grant for any other use.

3. **Qualifications of BIDDERS.**

3.1 OWNER may make such investigations it deems necessary to determine the ability of the BIDDER to perform the Work, and the BIDDER shall within seven (7) calendar days furnish to the OWNER all such information and data for this purpose as the OWNER may request. OWNER reserves the right to reject any bid if the evidence submitted by, or investigation of, such BIDDER fails to satisfy the OWNER that such BIDDER is properly qualified to carry out the obligations of the Agreement and to complete the Work contemplated herein.

3.2 BIDDER shall have a New Mexico Contractor's License and all classifications required to perform the Work, and shall provide such information in the space provided in the Bid Form.

3.3 In order to submit a bid valued at more than sixty thousand dollars ($60,000) in order to respond to a request for proposals or to be considered for award of any portion of a public works project greater than sixty thousand dollars ($60,000) for a public works project that is subject to the Public Works Minimum Wage Act [Section 13-4-10 NMSA 1978, *et seq.*], the CONTRACTOR, serving as a prime contractor or not, shall be registered with the Labor and Industrial Division of the New Mexico Department of Worforce Solutions. Each CONTRACTOR, prime contractor or subcontractor is required to be registered pursuant to this subsection.

4. **Examination of Contract Documents and Site.**

4.1 It is the responsibility of each BIDDER before submitting a Bid:

4.1.1 To examine thoroughly the Contract Documents and other related data identified in the Bidding Documents (including “technical data” referred to below);

4.1.2 To visit the site(s) to become familiar with and satisfy BIDDER as to the general, local and site conditions that may affect cost, progress, performance or furnishing of the Work;

4.1.3 To consider federal, state and local Laws and Regulations that may affect cost, progress, performance or furnishing of the Work;

4.1.4 To study and carefully correlate BIDDER's knowledge and observations with the Contract Documents and such other related data; and

4.1.5 To promptly notify OWNER of any and all conflicts, errors, ambiguities or discrepancies which BIDDER may discover in or between the Contract Documents and such other related documents.

4.2 Information and data shown or indicated in the Contract Documents with respect to existing Underground Facilities at or contiguous to the site is based upon information and data furnished to OWNER and ARCHITECT by owners of such Underground Facilities or others, and OWNER and ARCHITECT make no guarantees as to the accuracy or completeness thereof unless it is expressly provided otherwise in the Supplementary Conditions.

4.3 Before submitting a Bid each BIDDER will be responsible to obtain such additional or supplementary examinations, investigations, explorations, tests, studies and data concerning conditions (surface, subsurface and Underground Facilities) at or contiguous to the site or otherwise, which may affect cost, progress, performance or furnishing of the Work or which relate to any aspect of the means, methods, techniques, sequences or procedures of construction to be employed by BIDDER and safety precautions and programs incident thereto or which BIDDER deems necessary to determine its Bid for performing and furnishing the Work in accordance with the time, price and other terms and conditions of the Contract Documents.

4.4 On request, OWNER will provide each BIDDER access to the site to conduct such examinations, investigations, explorations, tests and studies as each BIDDER deems necessary for submission of a Bid. BIDDER must fill all holes and clean up and restore the site to its former conditions upon completion of such explorations, investigations, tests and studies.

4.5 Reference is made to the Supplementary Specifications for the identification of the general nature of any work that is to be performed at the site by OWNER or others (such as utilities and other prime contractors) that relates to the work for which a Bid is to be submitted. On request, OWNER will provide to each BIDDER for examination access to or copies of Contract Documents (other than portions thereof related to price) for such work.

4.6 The submission of a Bid will constitute an incontrovertible representation by BIDDER that BIDDER has complied with every requirement of this Article 4, that without exception the Bid is premised upon performing and

furnishing the Work required by the Contract Documents and applying the specific means, methods, techniques, sequences or procedures of construction (if any) that may be shown or indicated or expressly required by the Contract Documents, that BIDDER has given OWNER written notice of all conflicts, errors, ambiguities and discrepancies that BIDDER has discovered in the Contract Documents and the written resolutions thereof by OWNER is acceptable to BIDDER, and that the Contract Documents are generally sufficient to indicate and convey understanding of all terms and conditions for performing and furnishing the Work.

4.7 The provisions of the above items 4.1 through 4.7, inclusive, do not apply to Asbestos, Polychlorinated biphenyls (PCBs), Petroleum, Hazardous Waste or Radioactive Material covered by Subsection 10.3 of the General Conditions.

5. **Availability of Lands for Work, etc.**

The lands upon which the Work is to be performed, rights–of–way and easements for access thereto and other lands designated for use by CONTRACTOR in performing the Work are identified in the Contract Documents.

All additional lands and access thereto required for temporary construction facilities, construction equipment or storage of materials and equipment to be incorporated in the Work are to be obtained and paid for by CONTRACTOR. Easements for permanent structures or permanent changes in existing facilities are to be obtained and paid for by OWNER unless otherwise provided in the Contract Documents. Access to lands used for offsite disposal of excess soil will be obtained and paid for by CONTRACTOR.

6. **Interpretations and Addenda.**

6.1 All questions about the meaning or intent of the Bidding Documents shall be submitted to OWNER in writing. Interpretations or clarifications considered necessary by OWNER in response to such questions will be issued by Addenda mailed or delivered to all parties recorded by the Issuing Office as having received the Bidding Documents. Questions received less than ten (10) calendar days prior to the date for opening of Bids may not be answered. Only questions answered by formal written Addenda will be binding. Oral and other interpretations or clarifications will be without legal effect.

6.2 Addenda may also be issued to modify the Bidding Documents as deemed advisable by OWNER or ARCHITECT.

6.3 Each Addendum shall be a part of the Contract Documents to the same extent as though contained in the original documents and itemized listings

thereof and all BIDDERS shall be bound by such Addenda. Each BIDDER shall ascertain, prior to submitting the bid, that the BIDDER has received all Addenda issued, and shall acknowledge receipt of each Addendum on his Bid Form.

7. **Bid Security.**

7.1 Each Bid must be accompanied by Bid Security made payable to OWNER in an amount of at least five (5%) percent of BIDDER's total bid amount and in the form of a certified or bank check or a Bid Bond on a form acceptable to the OWNER issued by a surety meeting the requirements of Subsection 11.1 of the General Conditions.

7.2 The Bid Security is submitted as a guarantee that the BIDDER, if awarded the Contract, will promptly execute the Agreement in accordance with the Bid Form and in the manner and form required by the Contract Documents, will furnish good and sufficient bond for the faithful performance of the same and for the payment of all labor and materials, and furnish required certificates of insurance.

7.3 The Bid Securities of all BIDDERS except the three lowest will be returned promptly after the canvas of bids.

7.4 OWNER shall have the right to retain the Bid Security of the three apparent lowest BIDDERS until either (a) the Agreement has been executed and the Labor and Material Payment Bond and the Performance Bond and all required proof of insurance, including certificates of insurance, have been furnished to OWNER; (b) the time specified in the Bidding Documents has elapsed so that BIDDER may withdraw the Bid Proposal; or (c) all bids have been rejected, whichever occurs first.

7.5 If the Successful Bidder fails to execute and deliver the Agreement and furnish the required Performance Bond, Labor and Material Payment Bond and certificates of insurance within the required time period after receipt of the Notice of Recommendation to Award, OWNER may annul the Notice of Recommendation to Award and the Bid Security of that BIDDER shall be forfeited to OWNER as liquidated damages, not as a penalty.

7.6 Bids submitted without the required Bid Security will not be considered.

7.7 The Performance Bond and the Payment Bond will be equal to one hundred (100%) percent of the contract price.

8. **Contract Times.**

The number of days within which, or the dates by which, the Work is to be substantially complete are set forth in the Bid Form.

9. **Liquidated Damages.**

Provisions for liquidated damages, if any, are set forth in the Bid Form.

10. **Substitute and "Or–Equal" Items.**

The Contract, if awarded, will be on the basis of materials and equipment described in the Drawings or specified in the Specifications without consideration of possible substitute or "or–equal" items. Whenever it is indicated in the Drawings or specified in the Specifications that a substitute or "or–equal" item of material or equipment may be furnished or used by CONTRACTOR if acceptable to ARCHITECT, application for such acceptance will not be considered by ARCHITECT until after the Effective Date of the Agreement, unless noted in the Specifications. The procedure for submission of any such application by CONTRACTOR and consideration by ARCHITECT is set forth in Subsection 3.4.2 of the General Conditions and may be supplemented in the General Requirements.

11. **Subcontractors, Suppliers and Others.**

11.1 If the Supplementary Conditions require the identity of certain Subcontractors, Suppliers and other persons and organizations (including those who are to furnish the principal items of material and equipment) to be submitted to OWNER in advance of the Notice of Award, the apparent Successful Bidder, and any other BIDDER so requested, shall, within seven calendar (7) days request by OWNER, submit to OWNER a list of all such Subcontractors, Suppliers and other persons and organizations proposed for those portions of the Work for which such identification is required. Such list shall be accompanied by an experience statement with pertinent information regarding similar projects and other evidence of qualification for each such Subcontractor, Supplier, person or organization if requested by OWNER. An OWNER or ARCHITECT who after due investigation has reasonable objection to any proposed Subcontractor, Supplier, other person or organization, may before the Notice of Award is given request apparent Successful Bidder to submit an acceptable substitute, in which case apparent Successful Bidder may submit an acceptable substitute, that BIDDER's Bid price will be increased (or decreased) by the difference in cost occasioned by such substitution, and OWNER may consider such price adjustment in evaluating Bids and making the contract award. If the apparent Successful Bidder declines to make any such substitution, he will not thereby sacrifice his Bid Security.

Any Subcontractor, other person or organization so listed and to whom OWNER does not make written objection prior to the giving of the Notice of Award shall be deemed acceptable to OWNER. This subsection does not apply to the BIDDER'S listing of Subcontractors for Compliance with the Subcontractor's Fair Practices Act, which must be complete at the time the Bid is submitted to OWNER.

11.2 Some Public Works Projects may be subject to the provisions of the "Subcontractors Fair Practices Act" (Chapter 18, Laws 1988; Sections 13–4–31 through 13–4–43 NMSA 1978). When this Act is applicable, BIDDER shall comply with the requirements set forth in the Supplementary Conditions of these Bidding Documents.

11.3 No CONTRACTOR shall be required to employ any Subcontractor, Supplier, other person or organization against whom CONTRACTOR has reasonable objection.

12. **Bid Form.**

12.1 Prices shall be filled in for all items on the Bid Form, including alternates as may be required on the Bid Form. The price for each item shall include its pro–rata share of overhead, profit and insurance. Prices shall also include any and all license and royalty fees for products, materials and processes. Prices shall be shown in numerals in ink, printed or typed in the spaces provided. Any alterations to the bid amounts by erasures or by interlineations shall be initialed by the signer of the Bid Form.

12.2 BIDDER shall include all applicable taxes, except New Mexico Gross Receipts Tax, in all bid amounts, including Lump Sum, Unit Price and Alternate Bid amounts. The Bid Form shall contain a separate entry for New Mexico Gross Receipts Tax immediately preceding the Base Bid. All Alternates shall contain a separate entry for New Mexico Gross Receipts Tax immediately preceding the total amount of the Alternate. No Unit Prices nor Lump Sum Amounts contained within the bid shall include New Mexico Gross Receipts Tax.

12.3 Bids by corporations must be executed in the corporate name by the president or a vice–president (or other corporate officer accompanied by evidence of authority to sign) and the corporate seal must be affixed and attested by the secretary or an assistant secretary. The corporate address and state of incorporation must be shown below the signature.

12.4 Bids by partnerships must be executed in the partnership name and signed by a partner, whose title must appear under the signature and the official address of the partnership must be shown below the signature.

12.5 All names must be typed or printed in ink below the signature.

12.6 BIDDER shall acknowledge receipt of all Addenda by entering the number and date of each addendum in the space provided on the Bid Form.

12.7 The address and telephone number for communications regarding the Bid must be shown.

12.8 If BIDDER is an out–of–state corporation, evidence of authority to conduct business as an out–of–state corporation in New Mexico shall be provided in accordance with Paragraph 3 above.

12.9 BIDDER shall enter his New Mexico Contractor's License Number and Classifications in the space provided on the Bid Form.

13. **Submission of Bids.**

Bids shall be submitted at the time and place indicated in the Advertisement or Invitation to Bid and shall be enclosed in an opaque sealed envelope, marked with the Project title (and, if applicable, the designated portion of the Project for which the Bid is submitted) and name and address of BIDDER and accompanied by the Bid security and other required documents. If the Bid is sent through the mail or other delivery system the sealed envelope shall be enclosed in a separate envelope with the notation "BID ENCLOSED" on the face of it.

Delayed Opening or Closing of City Offices: In the event that City Hall is officially on a delayed opening for any reason (for example, inclement weather) and City Hall is not open at least two (2) hours prior to bid opening, the deadline for bid and proposal submissions will be delayed for exactly the amount of time indicated in the official City announcement. For example, if City Hall is on a two (2) hour delay, deadline for receipt of bids and proposals due prior to 12:00 p.m. will be delayed by two (2) hours and bids due after 12:00 p.m. will be due at their regularly scheduled time. Also, if City Hall is officially closed for any reason (such as inclement weather) for all or part of the day that submission of bids is due (other than an official, announced delayed opening), bids will be due at the same time on the following business day. Any delayed opening or closing of City Hall will be announced on the City's website, http://www.rrnm.gov.

14. **Application of Resident, Veteran, Local, Area, and Recycled Content Goods Preference.**

DEFINITIONS:

LOCAL BUSINESS means a Resident Business or Resident Contractor which:

(a) Is authorized to do and is doing business under the laws of the State of New Mexico;

(b) Possesses a current city business registration;

(c) Maintains its principal place of business within the corporate limits of the city; and
(d) Agrees to furnish evidence, in a form suitable to the city, of its payment of New Mexico Gross Receipts Tax.

AREA BUSINESS means a Resident Business or Resident Contractor which:
(a) Is authorized to do and is doing business under the laws of the State of New Mexico;
(b) Possesses a current city business registration;
(c) Maintains a bona fide place of business within the corporate limits of the city, and agrees to conduct its activities pursuant to the contract for which it is bidding or proposing, to the extent practicable, from that place of business; and
(d) Agrees to furnish evidence, in a form suitable to the city, of its payment of New Mexico Gross Receipts Tax.

RECYCLED CONTENT GOODS has the meaning set forth in NMSA 1978 § 13-1-21(A)(5), as amended from time to time.

RESIDENT BUSINESS has the meaning set forth in NMSA 1978 § 13-1-21(A)(6), as amended from time to time.

RESIDENT CONTRACTOR has the meaning set forth in NMSA 1978 § 13-4-2(A)(5), as amended from time to time.

RESIDENT VETERAN BUSINESS has the meaning set forth in NMSA 1978 § 13-1-22(A)(7), as amended from time to time.

RESIDENT VETERAN CONTRACTOR has the meaning set forth in NMSA 1978 § 13-4-2(A)(6), as amended from time to time.

STATUTORY PREFERENCE means the preference for Resident Businesses, Resident Contractors, Resident Veteran Businesses, Resident Veteran Contractors, and Recycled Content Goods provided in NMSA 1978 §§ 13-1-21 or 13-4-5, as amended from time to time.

QUALIFYING COMPANY means a company that qualifies for a Statutory Preference under NMSA 1978 §§ 13-1-21 or 13-4-5, as amended from time to time.

INSTRUCTIONS:

- In all invitations for bid and requests for proposals, the Statutory Preferences shall be applied in the manner set forth in NMSA 1978 §§ 13-1-21 or 13-4-5, as amended from time to time.
- A copy of a valid Resident Business, Resident Contractor, Resident Veteran Business, or Resident Veteran Contractor Certificate issued by the

New Mexico Taxation & Revenue Department. Information regarding resident preference can be obtained by contacting the Point of Contact as listed herein.

- In addition to the Statutory Preferences, a preference for Local Businesses and Area Businesses shall be administered in the same manner as the Statutory Preferences, as follows:
    1. in the event a Local Business submits a qualifying bid or proposal and one or more Qualifying Companies also submits a bid or proposal, the Local Business shall receive a two percent (2%) preference in addition to (and not in lieu of) the Statutory Preference; and
    2. in the event an Area Business submits a qualifying bid or proposal and one or more Qualifying Companies also submits a bid or proposal, the Area Business shall receive a one percent (1%) preference in addition to (and not in lieu of) the Statutory Preference.
- In addition to the definitions and criteria set forth in this section, the central purchasing office may impose additional requirements regarding the nature, size and/or location of offerors or bidders in any request for proposals or invitation for bids. As a result, companies responding to such solicitations should review the solicitation documents thoroughly.
- Information regarding the City's Procurement Code and the application of the local and resident preference can be obtained by contacting the Point of Contact as listed herein.
- For consideration for the Area, Local, and Recycled Content Goods preference, the Offeror must complete the Preference Certification Form, attached hereto, in accordance with the instructions and return the form with its Technical Proposal.
- In addition to the definitions and criteria set forth in the section, when a joint bid or joint proposal is submitted by both resident and non-resident businesses, the resident business preference provided pursuant to Subsection B or C of the NMSA 1978 §§ 13-1-21 or 13-4-5, as amended from time to time , shall be reduced in proportion to the percentage of the contract, based on the dollar amount of the goods or services provided under the contract, that will be performed by a non-resident business as specified in the join bid or proposal.

15. **Modification and Withdrawal of Bids.**

15.1 Bids may be modified or withdrawn by an appropriate document duly executed (in the manner that a Bid must be executed) and delivered to the place where Bids are to be submitted at any time prior to the scheduled closing time for receipt of Bids.

15.2 If, within twenty–four (24) hours after Bids are opened, any BIDDER files a duly signed, written notice with OWNER and promptly thereafter

demonstrates to the reasonable satisfaction of OWNER that there was a material and substantial mistake in the preparation of its Bid, that BIDDER may withdraw its Bid and the Bid security will be returned. Thereafter, that BIDDER will be disqualified from further bidding on the Work to be provided under the Contract Documents.

16. **Opening of Bids.**

BIDDERS are invited to be present at the Bid Opening. The person(s) reading the bids will adhere to the following procedure prior to reading the amount of the bid:

16.1 Read name of BIDDER, BIDDER's New Mexico contractor's license number and classification, and when applicable the BIDDER's Resident Contractor Number.

16.2 Read the amount of the Bid Security.

16.3 Verify BIDDER's acknowledgment of Addenda.

16.4 Determine whether the Bid Proposal is signed.

16.5 Verify submittal of BIDDER's Listing of Subcontractors for compliance with Subcontractors Fair Practices Act.

16.6 Determine whether other requirements are met.

If any of the above requirements have not been met, the bid shall be read after the deficiency or deficiencies have been announced and noted.

17. **Bids to Remain Subject to Acceptance.**

All Bids shall remain subject to acceptance for the period of time after the scheduled closing time for receipt of bids as indicated on the Bid Form, but OWNER may, in its sole discretion, release any Bid and return the Bid security prior to that date.

18. **Award of Contract.**

18.1 OWNER reserves the right to reject any or all Bids, including without limitation the rights to reject any or all nonconforming, non–responsive, unbalanced or conditional Bids and to reject the Bid of any BIDDER if OWNER believes that it would not be in the best interest of the Project to make an award to that BIDDER, whether because the Bid is not responsive or the BIDDER is unqualified or of doubtful financial ability or fails to meet any other pertinent standard or criteria established by OWNER. OWNER also reserves the right to waive all informalities not

involving price, time or changes in the Work and to negotiate contract terms with the Successful Bidder. OWNER reserves the right to cancel the opportunity for submission of bids. OWNER further reserves the right to reject for OWNER's convenience all bids submitted. BIDDERS shall not be entitled to recover damages of any nature against OWNER for OWNER's rejection of all bids, for cause or for convenience.

18.2 Discrepancies between the multiplication of units of Work and unit prices will be resolved in favor of the unit prices. Discrepancies between the indicated sum of any column of figures and the correct sum thereof will be resolved in favor of the correct sum. Discrepancies between words and figures will be resolved in favor of the words.

18.3 In evaluating Bids, OWNER may consider the qualifications of BIDDERS, whether or not the Bids comply with the prescribed requirements, and such alternates, unit prices and other data, as may be requested in the Bid Form or prior to the Notice of Award.

18.4 OWNER may consider the qualifications and experience of Subcontractors, Suppliers, and other persons and organizations proposed for those portions of the Work as to which the identity of Subcontractors, Suppliers, and other persons and organizations must be submitted as provided in the Supplementary Conditions. OWNER also may consider the operating costs, maintenance requirements, performance data and guarantees of major items of materials and equipment proposed for incorporation in the Work when such data is required to be submitted prior to the Notice of Award.

18.5 OWNER may conduct such investigations as OWNER deems necessary to assist in the evaluation of any Bid and to establish the responsibility, qualifications and financial ability of BIDDERS, proposed Subcontractors, Suppliers and other persons and organizations to perform and furnish the Work in accordance with the Contract Documents to OWNER's satisfaction within the prescribed time.

18.6 If a Contract is awarded, it will be awarded to the lowest responsive bid submitted from a responsible BIDDER on the Base Bid shown on the Bid Form; provided, however, that if the Bid Form is a Unit Price Bid Form and there is a discrepancy between the amount shown as the Base Bid and the actual total amount of the Base Bid determined by multiplying the Unit Price shown for each Bid Item by the Estimated Quantity shown for that Bid Item, adding each such amount to obtain a subtotal amount and then adding the New Mexico Gross Receipts Tax amount determined by multiplying the subtotal amount by the New Mexico Gross Receipts Tax percentage given on the Bid Form, it will be awarded to the lowest responsible BIDDER on the actual total amount of the Base Bid; provided

further, that when Alternates are to be accepted by OWNER, it will be awarded to the Responsible BIDDER who bids the lowest combined bid of the Base Bid and all accepted Alternates. For each Alternate, New Mexico Gross Receipts Tax shall be shown as a separate entry after the subtotal using the method described above, and shall be followed by a total derived by adding the subtotal and Gross Receipts Tax amounts. Alternates, if any, shall be accepted by the City, at its sole discretion, in any order or combination thereof.

18.7 In the event that two (2) or more of the bids submitted are identical in price and are the low bid, the OWNER may award by lottery to one of the identical low Bidders.

18.8 Preference: Various preferences will be afforded to an Offeror who qualifies as a resident Offeror in accordance with New Mexico State Law and City of Rio Rancho Ordinance. This section shall not apply when the expenditure includes federal funds for a specific purchase.

18.9 If the Contract is to be awarded, the OWNER will give the apparent Successful Bidder a Notice of Recommendation to Award within the period specified in the Bid Form unless the BIDDER and the OWNER agree to extend the period specified.

19. **Signing of Agreement.**

If and when OWNER gives a Notice of Recommendation to Award to the Successful Bidder, it will be accompanied by the required number of unsigned counterparts of the Agreement with all other written Contract Documents attached. Within ten (10) calendar days thereafter, BIDDER shall sign and deliver the required number of counterparts of the Agreement and attached documents to OWNER with the required Performance and Payment Bonds in accordance with Subsection 11.4 of the General Conditions and the Supplementary Conditions, and Certificates of Insurance in accordance with Arcticle 11 of the General Conditions and the Supplementary Conditions. Within ten (10) calendar days following the Award of Contract by OWNER, OWNER shall deliver one fully signed counterpart to CONTRACTOR. Each counterpart is to be accompanied by a complete set of the Drawings with appropriate identification.

20. **Non-Appropriations**

The terms of the awarded Agreement and all amounts payable are contingent upon sufficient appropriations therefor by the City's Governing Body. If sufficient appropriations are not made, the City shall notify the Contractor of the same, and the Agreement shall terminate forthwith.

21. **Pre–Bid Conference.**

When a pre–bid conference date is given in the Advertisement for Bid or by Addendum, the conference shall be conducted to explain the Project. Attendance at the pre–bid conference shall be mandatory only when so required in the Advertisement for Bids or Addendum. When attendance is mandatory, failure to attend shall disqualify the prospective BIDDER from submitting his Bid. Whenever attendance is not specified as mandatory, prospective BIDDERS are encouraged to attend and should be prepared to ask questions or request clarifications regarding the Project and Bidding Documents. Nothing stated at the pre–bid conference shall change the Bidding Documents unless a change is made by Addendum. When attendance is not mandatory, failure of a BIDDER to attend the pre–bid conference shall mean that the Bidding Documents are clear, unambiguous, and acceptable to all non–participants, with respect to all who submit bids.

22. **Guarantee Provisions.**

The CONTRACTOR shall guarantee the Work as provided in the General Conditions and Supplementary Conditions.

23. **Affirmative Action Program.**

The CONTRACTOR shall comply with the Affirmative Action/Equal Employment Opportunity and Nondiscrimination requirements in the Supplementary Conditions.

24. **Wage Rates.**

The BIDDER's attention is directed to the fact that wages to be paid on this Project shall not be less than the prevailing wage rates as listed by the New Mexico State Office of Labor Commissioner and, where applicable, the prevailing Federal Wage Rate Decision listed by the U.S. Department of Labor in effect at the scheduled closing time for receipt of bids.

In the event more than one (1) wage scale applies to the Project, the appropriate wages to be paid to the various classes of laborers and mechanics employed under the contract shall be the highest prevailing wages for each job classification for the particular type of construction being performed by the construction worker.

25. **Permits**

The CONTRACTOR shall bear the sole responsibility of securing and paying for permits, fees, and licenses required for execution of Work as applicable at the time of receipt of bids.

26. **Collusion**

All BIDDERS must submit an affidavit of non-collusion and certify that the bid submitted was arrived at without resorting to any collusive bidding practices. Collusion is defined as any activity that artificially affects prices when bidding on a contract or activity that restricts competition among bidders or potential bidders by exchanging or sharing information with firms presumed to be competing for the same contract.

Any person with knowledge of collusive bidding or other misconduct is encouraged to report possible violations to the City Purchasing Manager.

27. **Worker's Compensation Insurance/Non–Resident Contractors.**

Notice is given that in addition to the requirements of the General Conditions of the Contract, Non–Resident Contractors shall comply with the provisions of Sections 52–1–66; 59A–17–10.1; 59A–18–1; and 59A–18–12 NMSA 1978, pertaining to the worker's compensation insurance policy and rate for employers not domiciled in New Mexico.

28. **STATE OF NEW MEXICO SUBCONTRACTORS FAIR PRACTICES ACT.** This Public Works Project is subject to the provisions of the Subcontractors Fair Practices of the State of New Mexico.

28.1 General: This law requires that all work being performed by a Subcontractor in the amount exceeding the listing threshold be performed under the provisions of the Subcontractors Fair Practices Act.

28.2 Listing Threshold Amount: The listing threshold shall be five thousand dollars ($5,000) or ½ of 1% of the Architect's Estimate of the total project cost, not including alternates, whichever is greater.

28.3 List of Subcontractors Required: BIDDER shall define the categories of Subcontractors in his bid and shall list no more than one Subcontractor for each category. This listing shall only apply to those Subcontractors whose listing is required pursuant to the New Mexico Subcontractors Fair Practices Act and estimated work exceeds the threshold dollar amount given in Section 27.2 above. This list shall be completed on the form entitled "Bidder's Listing of Subcontractor for Compliance with the Subcontractors Fair Practices Act" immediately after the Bid Form. This sheet must be filled in if a Subcontractor whose work exceeds the threshold limit is to be used. The list shall include the name and business address of each Subcontractor under potential subcontract to the bidder, who will perform work or labor or render service, which exceeds the threshold amount. All Subcontractors whose listing is required pursuant to the New Mexico Subcontractors Fair Practices Act and whose estimated

work exceeds the threshold shall be listed at the time the Bid is submitted to OWNER. With respect to any category of work for which no subcontractor is listed in the above-referenced form and the BIDDER does not state that 'no bid was received' or that 'only one bid was received', BIDDER should be prepared to document (1) that it is licensed and prepared to do the work itself, and/or (2) that it has determined, at the time of submission of its bid, that the category of work does not exceed the threshold dollar amount given in Section 27.2 above. Failure to complete this form will result in a non-responsive bid that will be rejected.

28.4 Delays Attributable to Hearings Required by the Subcontractors Fair Practices Act: In the event a hearing is held pursuant to the provisions of the Subcontractors Fair Practices Act and a delay in the Work of the Project is caused as a result, the CONTRACTOR shall not be entitled to an increase in the contract amount or contract time.

28.5 Applicability of this Section: Any questions regarding this act should be referred to Legal Counsel.

29. The selected Contractor shall comply with all applicable Worker's Safety Requirements of the U.S. Occupational Health and Safety Administration.

30. **The City of Rio Rancho Procurement Code,** Section 36.37, Paragraph B, notes that New Mexico criminal statutes impose felony penalties for illegal bribes, gratuities and kickbacks.

31. **PURCHASING OFFICE**

This IFB is issued on behalf of the City of Rio Rancho by the Purchasing Office, which is **THE SOLE POINT OF CONTACT DURING THE PROCUREMENT PROCESS**. **Communications initiated by a bidder to this IFB with members of the Governing Body or City personnel, other than as coordinated by the Point of Contact noted below, shall be grounds for Offeror disqualification. Any inquiries or requests during this procurement shall be submitted to the following Point of Contact in writing:**

City of Rio Rancho
Department of FINANCIAL Services, Purchasing Division
Attention: Shonna Ybarra, Purchasing and Contracts Division Manager
3200 Civic Center Circle NE, STE 300
Rio Rancho, NM 87144
(505) 891-5044
sybarra@rrnm.gov

Return of Acknowledgement Form for Distribution List. Potential Bidders should return by email, facsimile, registered mail or in person the

Acknowledgement Form (see on next page) to have their firm placed on the procurement distribution list. Failure to return this form will prevent the potential Bidder's firm name from appearing on the procurement distribution list. The procurement distribution list will be used for distribution of important information regarding this solicitation. **A valid email address must be provided.**

CITY OF RIO RANCHO
DEPARTMENT OF FINANCIAL SERVICES
IFB 20-PR-029
Construction of a New Senior Center

ACKNOWLEDGMENT FORM

Please complete this form and return it to the City of Rio Rancho Financial Services Department. Failure to return this form will not exclude a firm from submitting a bid; however, only those prospective respondents who elect to return this form will receive addenda, if issued, and/or other information pertaining to this solicitation.

Name of Firm: _____

Firm Representative: _____ **Title:** _____

Phone: _____ **Fax:** _____

E-Mail: (required) _____

Address: _____

City: _____ **State:** _____ **Zip:** _____

When completed, please email, fax or mail this form to the following contact:

Shonna Ybarra, Purchasing and Contracts Division Manager
CITY OF RIO RANCHO
DEPARTMENT OF FINANCIAL SERVICES
3200 CIVIC CENTER CIRCLE
RIO RANCHO, NM 87144
Telephone: (505) 891-5044
Fax: (505) 891-5762
sybarra@rrnm.gov

NOTICE TO CONTRACTORS
IFB 20-PR-029
CONSTRUCTION OF A NEW SENIOR CENTER

1. Statement of Scope of Work

The City of Rio Rancho is soliciting formal bids for the construction of a 7,500 square foot new Senior Center on approximately 3.85 acres of land owned by UNM located at 3241 Broadmoor Boulevard NE in Rio Rancho. Work shall include site grading and drainage improvements, building and parking lot construction with associated landscaping, utility line construction and extension per plan. This project shall be permitted and inspected by the New Mexico Construction Industries Department.

The University of New Mexico (UNM) and the City of Rio Rancho (City) entered into a long term ground lease for the location the New Senior Center will be built. There are specific insurance requirements that the awarded Contractor will need to comply with and thus a copy of the fully executed ground lease is attached as Exhibit 1 to this bid. Both UNM and the City of Rio Rancho will be designated as Owners for this project.

2. Standard Specifications

The Standard Specifications for the Project also are the State of New Mexico currently adopted Building Code, the New Mexico State Department of Transportation Standard Specifications for Highway and Bridge Construction, 2014 Edition, as amended and published by the New Mexico State Department of Transportation; New Mexico Standard Specifications for Public Works Construction, Current Edition, as amended and published by the New Mexico Chapter of the American Public Works Association, as well as latest modifications to various NMAPWA Sections per City of Rio Rancho that can be accessed online at: https://rrnm.gov/530/WaterandWastewater-Standard-Details; and the City of Rio Rancho Standard Details for Streets & Drainage and Standard Specifications. Copies of the Standard Specifications for Highway and Bridge Construction may be obtained online at: http://dot.state.nm.us/content/nmdot/en/Standards.html. Copies of the City of Rio Rancho Standard Details and Specifications for Streets & Drainage and Standard Specifications may be obtained online at: http://www.rrnm.gov/DesignStandards. The order of precedent for dealing with conflicts will be as follows: Addenda, Required Documents for Bid Submittal, Notice to Contractors, Invitation for Bids, Special Provisions, Construction Plans (other than Standard Drawings), Supplemental Technical Specifications, State of New Mexico currently adopted Building Code , City or Rio Rancho Standard Specifications, New Mexico Department of Transportation Specifications, American Public Works Association Specifications, City of Rio Rancho Standard Drawings, New Mexico Department of Transportation Standard Drawings. The

City shall make such determinations as necessary as to which Standard Specifications govern and control in the event of a conflict, discrepancy, or request for clarification from the Contractor.

3. Project Schedule

- Legal Advertisement: April 21, 2020
- Pre-Bid: April 27, 2020 at 10:30 AM
- Submittal Deadline for Approved Equals/Substitutions: May 1, 2020 by 3:00 PM
- Written Question Deadline: May 4, 2020 by 5:00 PM
- Addendum Deadline: May 7, 2020
- Bid Submission Deadline: May 14, 2020 by 10:00 AM

4. Requirement of Vendor Registration with City of Rio Rancho Purchasing Office

The awarded vendor must have a current registration with the City of Rio Rancho for the Purchasing Office to issue a Purchase Order on any project. If the Bidder is not currently registered, a completed Vendor Registration Form and W9 must be filled out and submitted to the Purchasing Office. Contractors can find these forms and additional information regarding Vendor Registration at the following web address: http://www.rrnm.gov/bids. Contractors may also contact the Purchasing Office to check their vendor registration status.

5. Prior Approvals/Equals

Contractors/suppliers shall submit substitute and/or equal approval requests no later than 3:00 PM on May 1, 2020. Requests shall be submitted utilizing the form in the Project Manual to the Point of Contact listed in the IFB via email. It will be the responsibility of the Contractor to prove the products requested will comply with the minimum performance specifications.

6. Material Testing and Quality Control for New Mexico American Public Works Association (NMAPWA) Specification Items

All testing shall comply with the American Water Works Association Standards/American National Standards Institute Standards, New Mexico Standard Specifications for Public Works Construction, Current Edition, as amended and published by the New Mexico Chapter of the American Public Works Association. Testing shall be considered incidental to the project. A copy of all testing performed must be given to the designated Project Manager.

7. Permitting, Inspections and Quality Control

All inspections and testing shall be conducted and paid for in accordance with the State of New Mexico currently adopted codes and regulations. The awarded Contractor will be responsible for contacting NMCID to schedule all necessary inspections. All cost associated with the necessary inspections and testing specified in the plans and Project Manual shall be the responsibility of the Contractor.

Additional permitting, testing or approval through the City may be required and includes, but is not limited to: backflow preventers, grease interceptor, and fire suppression

system. All backflow assemblies shall be tested at installation, and registered in the city backflow program (fees apply). Backflow test reports shall be submitted to waterprograms@rrnm.gov.

8. **Determination of Notice to Proceed Date**

Determination of the Notice to Proceed date is at the City of Rio Rancho's sole discretion.

9. **Preliminary Schedule Submittal**

The following preliminary schedules shall be provided by the Contractor at the scheduled Pre-Construction meeting:

a. Preliminary progress schedule
b. Preliminary schedule of submittals
c. Preliminary schedule of values

10. Storm Water Pollution Prevention Plan (SWPPP)

The contractor shall prepare and submit to the City and Project Manager a Storm Water Pollution Prevention Plan (SWPPP) seven (7) days prior to the Pre-Construction Meeting. Once approved, the contractor shall submit their Notice of Intent (NOI) to the City and Project Manager. Work may begin fourteen (14) days after the City has submitted its NOI to the Environmental Protection Agency (EPA), and not before.

11. Traffic Control

The Contractor shall submit, a minimum of five (5) business days prior to the requested commencement of construction in the area affected, a detailed Traffic Control Plan to the City's Traffic Section, and a copy to the designated Project Manager for review and approval by the City. Traffic Control plans shall conform to the City ordinance. The City of Rio Rancho Capital Improvement Right-of-Way Permit can be obtained at: http://www.rrnm.gov/CIPROW.

For any roadway closures, the Contractor shall notify the designated Project Manager a minimum of three (3) weeks prior to any approved traffic control plan implementation on any roadway.

12. Construction Staking and Record/As-Built Construction Drawings

The Contractor shall furnish all construction staking and surveys required to construct the project in accordance with the bearings, distances, and coordinate points specified in the drawings. The Contractor shall be responsible for furnishing OWNER with as-built survey information/record documents for construction work performed per Chapter 2.7 of the City of Rio Rancho's Development Manual and the Supplementary Conditions 4.05.B. As-built survey information/record documents shall be considered incidental to the project and no separate payment shall be made thereof.

13. Construction Water Meter

Construction water meters shall be obtained by the Contractor from the City of Rio Rancho Utility – Customer Services. Acquisition of the water meter and cost of water will be incidental to the project.

14. Water Line and Sewer Line Connections

Contractor shall coordinate water line and sewer line extensions and connections with the City of Rio Rancho Utilities Department with 48 hours or less. The awarded Contractor will be provided contact information at the pre-construction meeting.

15. Utility Coordination

Contractor shall coordinate all other utility connections with the appropriate representatives for PNM, New Mexico Gas Company and the fiber/telecom company, who will be extending service lines to the site.

16. Access Coordination

Contractor shall coordinate construction activities with the City of Rio Rancho Department of Public Works Project Manager for the Broadmoor/No Name Road construction project, and their awarded contractor.

Contractor shall access the project site and work within the bounds of the Temporary Construction Easement as granted to the City by the University of New Mexico. If access needs or boundaries of work must deviate from the Easement or project site, the Contractor will notify the City Project Manager as soon as possible.

17. Construction Debris Containment and Removal

Contractors must contact Waste Management in Rio Rancho if a dumpster or roll off is necessary for proper containment, removal, and disposal of construction debris for any projects completed within Rio Rancho City Limits. This will be incidental to the project.

18. Project Closeout

The Contractor shall represent the faithful final completion of the work, including but not limited to correction of incomplete or deficient items identified in the final inspection; final cleaning and removal of temporary facilities and controls; preparation and delivery of operation and maintenance manuals, record drawings, and other project records and documents; completion of all required demonstrations and training; completion of all close-out submittals; and all other close-out procedures and requirements, if any, required for the Project. The construction close-out submittals shall be in accordance with the City of Rio Rancho Development Process Manual Volume II, Chapter 7, Section 2.

Final Payment Application shall contain the following: Evidence of Completed Operations Insurance, Consent of the Surety to Final Payment, Certificate of Payment of Claims, Release of Liens (General and Sub-Contractors), Affidavit of Wages Paid, Copy of Certification of Substantial Completion, and Copy of Certificate of Final Completion. Final payment may not be made if lacking the aforementioned required documents. The documents required to close-out the project shall be incidental to the project and shall not

be included in the schedule of values. The Contractor shall represent the faithful final completion of the work, including but not limited to correction of incomplete or deficient items identified in the final inspection; final cleaning and removal of temporary facilities and controls; preparation and delivery of operation and maintenance manuals, record drawings, and other project records and documents; completion of all required demonstrations and training; completion of all close-out submittals; and all other close-out procedures and requirements, if any, required for the Project.

CITY OF RIO RANCHO
SUPPLEMENTAL CONDITIONS TO
DOCUMENT A201™ - 2007

AIA Document A201™ - 2007 General Conditions of the Contract for Construction, between the City of Rio Rancho (the "Owner") and _____ (the "Contractor"), to which these Supplemental Conditions are attached, is hereby amended as follows:

1. The term "Architect" shall be construed to mean the professional service provider for the Project.

2. Delete the last sentence of Section 1.1.1 and replace with the following:

The Contract Documents shall include the bidding documents as listed in the Instructions to Bidders and any alterations made thereto by addenda. In case of conflict between the bidding documents and the other documents comprising the Contract Documents, the provisions of such other documents shall prevail.

3. Delete Section 1.5.1 and 1.5.2 in their entirety and replace with the following:

§ 1.5.1 The Drawings, Specifications and other documents, including those in electronic form, prepared by the Architect and the Architect's consultants are Instruments of Service through which the Work to be executed by the Contractor is described. The Contractor may retain one record set. Neither the Contractor nor any Subcontractor, Sub-subcontractor or material or equipment supplier shall own or claim a copyright in the Drawings, Specifications and other documents prepared by the Architect or the Architect's consultants, and unless otherwise indicated the Architect and the Architect's consultants shall be deemed the authors of them. All copies of Instruments of Service, except the Contractor's record set, shall be returned or suitably accounted for to the Owner or the Architect, on request, upon completion of the Work. The Drawings, Specifications and other documents prepared by the Architect and the Architect's consultants, and copies thereof furnished to the Contractor, are for use solely with respect to this Project. They are not to be used by the Contractor or any Subcontractor, Sub-subcontractor or material or equipment supplier on other projects or for additions to this Project outside the scope of the Work without the specific, written consent of the Owner. The Contractor, Subcontractors, Sub-subcontractors and material or equipment suppliers are authorized to use and reproduce applicable portions of the Drawings, Specifications and other documents

prepared by the Architect and the Architect's consultants appropriate to and for use in the execution of their Work under the Contract Documents. All copies made under this authorization shall bear the statutory copyright notice, if any, shown on the Drawings, Specifications and other documents prepared by the Architect and the Architect's consultants. Submittal or distribution to meet official regulatory requirements or for other purposes in connection with this Project is not to be construed as publication in derogation of any copyrights or other intellectual property rights.

4. Delete Section 2.1.2 in its entirety.

5. Delete Section 2.2.3 in its entirety and replace with the following:

§ 2.2.3 The Owner shall furnish such surveys describing physical characteristics, legal limitations and utility locations for the site of the Project as may be reasonably necessary for prosecution of the Work, and a legal description of the site. The Contractor shall be entitled to rely on the accuracy of information furnished by the Owner but shall exercise proper precautions relating to the safe performance of the Work.

6. Delete Section 2.4 in its entirety and replace with the following:

§ 2.4 OWNER'S RIGHT TO CARRY OUT THE WORK§ 2.4.1 If the Contractor defaults or neglects to carry out the Work in accordance with the Contract Documents and fails within a seven-day period after receipt of written notice from the Owner to commence and continue correction of such default or neglect with diligence and promptness, the Owner may after such seven-day period give the Contractor a second written notice to correct such deficiencies within a three-day period. If the Contractor within such three-day period after receipt of such second notice fails to commence and continue to correct any deficiencies, the Owner may, without prejudice to other remedies the Owner may have, correct such deficiencies. In such case an appropriate Change Order shall be issued deducting from payments then or thereafter due the Contractor the reasonable cost of correcting such deficiencies, including Owner's expenses and compensation for the Architect's additional services made necessary by such default, neglect or failure. If payments then or thereafter due the Contractor are not sufficient to cover such amounts, the Contractor shall pay the difference to the Owner.

7. Add a new Section 2.5, to read as follows:

§ 2.5 LIEN RELEASES
§ 2.5.1 The Owner reserves the right to require the Contractor and all subcontractors, of whatever tier, and material suppliers to provide lien releases at any time with respect to any part of the Work for which payment has been made. The Owner reserves the right to withhold

progress payments until such lien releases are received for all work for which prior progress payments have been made. Upon the Owner's demand, the Contractor, subcontractors and material suppliers shall provide such releases with every pay request until final completion of the Project and final payment.

8. Add the following at the end of Section 3.1.3:

Quality control (i.e. ensuring compliance with the Contract Documents) is the responsibility of the Contractor. Except as may otherwise be expressly provided herein, any testing, observations and/or inspections performed or provided by or for the Owner are for quality assurance (i.e. confirming compliance with the Contract Documents) purposes and are for the benefit of the Owner and shall not alter or limit the scope of the Contractor's obligations hereunder in any way.

9. Add a new section 3.4.4, to read as follows:

§ 3.4.4 Prior to the execution of the Contract, the Owner has provided the Contractor with current New Mexico Wage Rates and Wage Rate Determination Number for the Project. The Contractor and all subcontractors, of whatever tier, shall adhere to such New Mexico Prevailing Wage Rates and comply in all other respects with the provisions of the New Mexico Public Works Minimum Wage Act (NMSA 1978 §§ 13-4-11 through 13-4-17) throughout their performance of the Work.

10. Add a new section 3.6.1, to read as follows:

§ 3.6.1 If applicable, OWNER may elect to perform a cost segregation study for New Mexico gross receipts tax deduction purposes relative to gross receipts taxes paid on a facility construction project under this Contract. Cost segregation in general, is the process of identifying and classifying building property components as tangible personal property due to the ability to depreciate said components over a shorter life span when the identified assets are able to meet criteria established under federal case law and treasury regulations. A cost segregation analysis seeks a deduction for gross receipts taxes paid on the sale of certain assets identified through the study as tangible personal property. OWNER will notify CONTRACTOR if it has decided to perform a cost segregation analysis on this facility construction project and CONTRACTOR agrees to cooperate in providing the necessary information required for the cost segregation study. OWNER may hire a third party provider (hereafter "Provider") to perform this analysis (in whole or in part) on OWNER's behalf and CONTRACTOR agrees to cooperate with such Provider (to be named at an appropriate time).

11. Add the following at the end of Section 3.12.5:

Any and all submittals that, in the opinion of the Architect, have not been reviewed for compliance by the Contractor even if marked as such, may be returned by the Architect without action and shall not result in any claim for delay or cost by the Contractor. Any submittal that, in the opinion of the Architect, is insufficient, incorrect or incomplete in any area or detail may be rejected and returned to the Contractor.

12. Add the following at the end of Section 3.12.7:

Should the Contractor, Subcontractors or Sub-subcontractors install, construct, erect or perform any portion of the Work without approval of any requisite submittal, the Contractor shall bear responsibility for all additional costs and delay incurred by any necessary removal, replacement, and/or correction.

13. Add a new Section 5.2.5, to read as follows:

§ 5.2.5 All Subcontractors and Sub-subcontractors shall be required, in their respective contracts with the Contractor, to comply with prevailing wage rates referred to in section 3.4.4.

14. Add the following at the end of Section 7.2.1.3:

Any and all changes or adjustments to the Contract Time requested or claimed by the Contractor as a result of a Change Order shall require documentation and justification for the adjustment. Changes that affect or concern activities containing float or slack time, and which can be accomplished within such float or slack time, shall not result in an increase in the Contract Time.

15. Add a new Section 8.3.4, to read as follows:

§ 8.3.4 The Contract Time will not be extended due to delays within the control of the Contractor. Delays attributable to and within the control of a Subcontractor or Supplier shall be deemed to be delays within the control of the Contractor.

16. Add a new Section 8.3.5, to read as follows:

§ 8.3.5 Where the Contractor is prevented from completing any part of the Work within the Contract Time due to delay beyond the control of both the Owner and the Contractor, an extension of the Contract time in an

amount equal to the time lost due to such delay shall be the Contractor's sole and exclusive remedy for such delay.

17. Add a new Section 8.3.6, to read as follows:

§ 8.3.6 In no event shall the Owner or the Architect be liable to the Contractor, any Subcontractor, any Supplier, or any other person or organization, or to any surety for or employee or agent of any of them, for damages arising out of or resulting from:

1. Delays caused by or within the control of the Contractor; or

2. Delays beyond the control of both the Owner and the Contractor including but not limited to fires, floods, epidemics, abnormal weather conditions, acts of God, or acts or neglect by utility owners or other contractors.

Nothing in this paragraph bars a change in Contract Price to compensate the Contractor due to delay, interference, or disruption directly attributable to actions or inactions of the Owner or anyone for whom the Owner is responsible.

18. Add the following at the end of Section 9.8.3:

The Contractor shall use its best efforts to ensure the project is substantially complete prior to requesting an inspection by the Architect to determine Substantial Completion, so that, to the extent reasonably possible, no more than one (1) inspection is necessary to determine Substantial Completion. If the Contractor does not perform adequate inspections to develop a comprehensive list as required by Section 9.8.2, and/or does not complete or correct such items upon discovery or notification by the Architect, the Contractor shall be responsible and pay for the costs of the Architect's additional inspection(s) to determine Substantial Completion.

19. Add the following at the end of Section 9.8.4:

Unless otherwise provided in the Certificate of Substantial Completion, warranties for any item, system or portion of the Work required to be completed in the list attached thereto shall commence when the Architect certifies that such portions of the Work have been completed in accordance with the Contract Documents.

20. Delete Section 10.3.3 in its entirety and replace with the following:

§ 10.3.3 To the fullest extent permitted by law, the Owner shall indemnify and hold harmless the Contractor, Subcontractors, Architect, Architect's consultants and agents and employees of any of them from and against claims, damages, losses and expenses, including but not limited to attorneys' fees, arising out of or resulting from performance of the Work in the affected area if in fact the material or substance presents the risk of bodily injury or death as described in Section 10.3.1 and has not been rendered harmless, provided that such claim, damage, loss or expense is attributable to bodily injury, sickness, disease or death, or to injury to or destruction of tangible property (other than the Work itself)to the extent that such damage, loss or expense is not due to the fault of the party seeking indemnity. Nothing herein shall operate or be deemed to alter or expand the Owner's liability or responsibilities beyond those permitted under the applicable provisions of the New Mexico Tort Claims Act (NMSA 1978 §§ 41-4-1 *et seq.*), or to waive any limitations or required procedures thereunder.

21. Add the following at the end of Section 10.3.

The Contractor shall indemnify and defend the Owner, and hold it harmless, for and from all costs, damages, claims, loss and/or expenses, including but not limited to remediation costs and attorneys' fees, related to or arising from any hazardous materials or substances brought to the site by the Contractor unless such materials or substances were required by the Contract Documents.

22. Delete Section 11.1.2 in its entirety and replace with the following:

§ 11.1.2 The insurance required by paragraphs 1 and 2 of Section 11.1.1 shall be written for not less than limits of liability specified in the Contract Documents or required by law, whichever coverage is greater. The insurance required by the remaining paragraphs of Section 11.1.1 shall be written for not less than Five Hundred Thousand Dollars ($500,000.00) per occurrence and Five Hundred Thousand Dollars ($500,000.00) aggregate liability. Coverages, whether written on an occurrence or claims-made basis, shall be maintained without interruption from date of commencement of the Work until date of final payment and termination of any coverage required to be maintained after final payment. The Owner shall be named as an additional insured under all policies providing the coverage required by paragraphs 3 through 8 of Section 11.1.1.

23. Delete Section 11.3 in its entirety and replace with the following:

§ 11.3 PROJECT MANAGEMENT PROTECTIVE LIABILITY INSURANCE

§ 11.3.1 Contractor shall purchase and maintain, with a company lawfully authorized to do business in New Mexico, Project Management Protective Liability insurance as primary coverage for the Owner's, Contractor's and Architect's vicarious liability for construction operations under the Contract. The minimum limits of liability purchased with such coverage shall be equal to the aggregate of the limits required for Contractor's Liability Insurance under Sections 11.1.1.2 through 11.1.1.5.

24. Add a new Section 13.8, to read as follows:

§ 13.8 CONFLICTS OF INTEREST

§ 13.8.1 The Contractor warrants that it presently has no interest and shall not acquire any interest, direct or indirect, which would conflict in any manner or degree with the performance of the Contractor's services under the Contract. The Contractor shall comply with all statutory, regulatory or ordinance provisions that relate to conflict of interest and require disclosure of amounts received under contract when and if such provisions become applicable, including the provisions of NMSA 1978 §§ 10-16-8 and 10-16-9, as amended.

25. Add a new Section 13.9, to read as follows:

§ 13.9 LIQUIDATED DAMAGES

§ 13.9.1 The parties acknowledge and agree that time is of the essence in this Contract, and the Owner will suffer substantial damages if the Contractor does not complete the Work within the Contract Time, but that such damages may be difficult, if not impossible, to determine accurately. In consideration of the foregoing, the parties agree that if the Contractor fails to complete the Work within the Contract Time, as a result of the Contractor's fault and not due to other events beyond the Contractor's control, the Contractor shall pay to the Owner, as liquidated damages and not as a penalty, a sum equal to Two Thousand dollars ($2,000.00) for each consecutive calendar day that the Work remain incomplete beyond the Contract Time.

26. Add a new Section 13.10, to read as follows:

§ 13.10 EQUAL OPPORTUNITY

§ 13.10.1 In the performance of the Contractor's services and obligations under the Contract:

.1 The Contractor shall not discriminate against any employee or applicant for employment because of race, creed, sex, color or national origin. The Architect will take affirmative action to ensure that applicants are employed, and that employees are treated during

employment, without regard to their race, creed, sex, color or national origin. Such action shall include, but not be limited to, the following: employment, upgrading, demotion, or transfer; recruitment or recruitment advertising; layoff or termination; rates of pay or other forms of compensation; and selection for training, including apprenticeship. The Contractor agrees to post in conspicuous places, available to employees and applicants for employment, notices setting forth the provisions of this non-discrimination clause.

.2 The Contractor shall, in all solicitation or advertisements for employees placed by or on behalf of the Contractor, state that all qualified applicants will receive consideration for employment without regard to race, creed, color, sex, or national origin.

.3 The Contractor shall cause the foregoing provisions to be inserted in all subcontracts for any work covered by the Contract so that such provisions will be binding on each Subcontractor, and require that each Subcontractor include the foregoing provisions in all sub-subcontracts for any work covered by the Contract so that such provisions will be binding on each Sub-subcontractor.

27. Add the following at the end of Section 14.4.3:

The Contractor shall provide an itemized accounting of all such costs.

28. Delete Section 15.1.2 in its entirety and replace with the following:

§ 15.1.2 TIME LIMITS ON CLAIMS.
Claims by the Owner or Contractor must be initiated within 21 days after occurrence of the event giving rise to such Claim, by written notice, in separate and distinct correspondence, to the Architect and the other party. To reserve its rights under this paragraph, the Contractor must provide written notice concerning any event that may give rise to a claim within 21 days of the event, whether or not any impact in money or time has been determined. The written notice must delineate the specific event and outline the causes and reasons for a claim or potential claim.

29. Delete Section 15.1.3 in its entirety and replace with the following::

§ 15.1.3 CONTINUING CONTRACT PERFORMANCE.
Pending final resolution of a Claim, except as otherwise agreed in writing or as provided in Section 9.7 and Article 14, the Contractor shall proceed diligently with performance of the Contract and the Owner shall continue to make payments in accordance with the Contract Documents on those

portions of the Work not directly involved in such Claim (if made by the Owner).

30. Delete Section 15.3.2 in its entirety and replace with the following:

§ 15.3.2 The parties shall endeavor to resolve claims disputes and other matters in question between them by mediation. Any claim, dispute or other matter in question arising out of or related to the Contract shall be subject to mediation in accordance with the provisions of the New Mexico Public Works Mediation Act (NMSA 1978 §§ 13-4C-1, *et seq*.).

31. Delete Section 15.4 in its entirety.

CITY OF RIO RANCHO
STATE OF NEW MEXICO

PURCHASING DIVISION
3200 Civic Center Circle NE - Suite 300
Rio Rancho, NM 87144

INVITES YOUR FIRM TO OFFER A BID ON:

IFB 20-PR-029
Construction of a New Senior Center

AS SPECIFIED IN THE ATTACHED BID DOCUMENTS.

Sealed bids will be received until 10:00 AM Local Mountain Time on Thursday, May 14, 2020

By the
Email: sybarra@rrnm.gov
Mailed Originals: City of Rio Rancho
Office of the City Clerk
1st Floor, Room # 150
3200 Civic Center Circle NE
Rio Rancho, NM 87144

_____
FIRM NAME

_____
STREET ADDRESS / P.O. BOX

_____
CITY, STATE, ZIP CODE

_____	_____	_____
TELEPHONE NUMBER	E-MAIL ADDRESS	FAX NUMBER

Complete this form as well as the following forms in their entirety as specified in the Instruction to Bidders to ensure that your bid submission is complete.

BID FORM

This Bid is submitted to the City of Rio Rancho, New Mexico (hereinafter called "OWNER").

1. The undersigned (hereinafter called "BIDDER"), in compliance with your invitation for bids for the **Construction of a New Senior Center,** having examined the drawings and specifications, with related documents, and having examined the site of the proposed work, and being familiar with all of the conditions surrounding the construction of the proposed project, including the availability of labor, materials and supplies, hereby proposes to furnish all labor, materials and supplies, and to construct the project in accordance with the contract documents at the prices stated below. These prices are to cover all expenses incurred in performing the work required under the contract documents, of which this proposal is a part.

2. **BID SUBMISSION: The Bidder agrees to perform all of the following Base Work and any/all Additive Alternate Work for the amounts submitted for Construction of a New Senior Center determined as follows:**

CITY OF RIO RANCHO
CONSTRUCTION OF A NEW SENIOR CENTER

Base Bid: Site grading and drainage improvements, building and parking lot construction with associated landscaping, utility line construction and extension per plan.

Base Bid Subtotal:	$ _____
NMGRT on Submission @ 7.6875%:	$ _____
Total Base Bid Submission:	$ _____

Additive Alternate #1: Build Multi-Purpose Room

Additive Alternate #1 Bid Subtotal:	$ _____
NMGRT on Submission @ 7.6875%:	$ _____
Total Additive Alternate #1 Bid Submission:	$ _____

Additive Alternate #2: Movable partition in multi-purpose room

Additive Alternate #2 Bid Subtotal:	$ _____
NMGRT on Submission @ 7.6875%:	$ _____
Total Additive Alternate #2 Bid Submission:	$ _____

Additive Alternate #3: Moveable partition in classrooms

Additive Alternate #3 Bid Subtotal:	$ _____
NMGRT on Submission @ 7.6875%:	$ _____
Total Additive Alternate #3 Bid Submission:	$ _____

Additive Alternate #4: Kitchen equipment package

Additive Alternate #4 Bid Subtotal:	$ _____
NMGRT on Submission @ 7.6875%:	$ _____
Additive Alternate #4 Bid Submission:	$ _____

Additive Alternate #5: Bids are not required for items specified in plans and specifications as Additive Alternate #5.

Additive Alternate #6: Change of doors 107.1 and 109.1 from hinge to automatic sliding doors.

Additive Alternate #6 Bid Subtotal:	$ _____
NMGRT on Submission @ 7.6875%:	$ _____
Additive Alternate #6 Bid Submission:	$ _____

Base Bid Subtotal:	$ _____
Additive Alternate #1 Bid Subtotal:	$ _____
Additive Alternate #2 Bid Subtotal:	$ _____
Additive Alternate #3 Bid Subtotal:	$ _____
Additive Alternate #4 Bid Subtotal:	$ _____
Additive Alternate #5 Bid Subtotal:	**NO BID REQUIRED**
Additive Alternate #6 Bid Subtotal:	$ _____
NMGRT on Submission @ 7.6875%:	$ _____
Total Bid Submission Including Base Bid, All Additive Alternates and NMGRT:	$ _____

3. BIDDER acknowledges receipt of the following Addenda:

   Addendum No. _____ Date _____ Addendum No. _____ Date _____

   Addendum No. _____ Date _____ Addendum No. _____ Date _____

4. BIDDER agrees that this Bid Proposal may not be withdrawn for a period of sixty (60) calendar days after the scheduled closing time for receipt of bids.

5. If the Contract is to be awarded. OWNER will give the apparent Successful Bidder a Notice of Recommendation to Award within sixty (60) days after the scheduled closing time for receipt of bids.

6. Upon receipt of Notice of Recommendation to Award, BIDDER shall execute the formal Contract Documents within ten (10) days and deliver the Performance Bond, Labor and Material Payment Bond, and Certificates of Insurance as required herein.

7. The attached Bid Security is to become the property of the OWNER, in the event the Agreement and bonds are not executed within the time specified in this Bid Proposal, as liquidated damages for the delay and additional expenses caused to the OWNER.

8. BIDDER hereby agrees to commence Work under this Contract in accordance with the Notice to Proceed from the OWNER and to substantially complete the Project as provided in the Contract Documents within **Two Hundred Forty (240)** consecutive calendar days after the date Contract Time begins as provided in the Contract Documents.

   BIDDER further agrees to pay, as liquidated damages, the amount of **Two Thousand dollars ($2,000.00)** for each consecutive calendar day thereafter as provided in the Supplementary Conditions.

9. BIDDER hereby declares that the only persons or firms interested in the Bid Proposal as principal or principles is or are named herein and that no other persons or firms than herein mentioned have any interest in the Bid or in the Contract to be entered into; that this Bid is made without collusion with any person, company, or parties making a bid or proposal; and that it is in all respects fair and in good faith without collusion or fraud.

10. BIDDER hereby agrees if awarded the Contract, to comply with the Affirmative Action/Equal Employment Opportunity and Nondiscrimination requirements of the Supplementary Conditions and to submit all information and reports required therein.

11. If requested, BIDDER agrees to furnish to the OWNER all information and data necessary for the OWNER to determine the ability of BIDDER to perform the Work.

This Bid is hereby respectfully submitted by:

_____	_____
Name of BIDDER	Federal Tax ID Number

_____
By: Printed Name

_____
Authorized Signature

_____
Title

_____
Date

_____
Bidder's Mailing Address

_____
Bidder's NM Contractor's License Number(s) and Classifications(s)

_____
Additional Address Information

_____
City, State, Zip Code

_____
Contractor's Department of Labor Registration Number

_____
Bidder's Telephone Number

_____
Bidder's Fax Number

_____
New Mexico State Corporation Commission Number

_____
Bidder's E-Mail Address

_____
Bidder's Gross Receipts Tax Number

_____
Bidder's DUNS Number

CITY OF RIO RANCHO BIDDER'S LISTING of SUBCONTRACTORS for Compliance with SUBCONTRACTORS FAIR PRACTICES ACT AND PUBLIC WORKS MINIMUM WAGE ACT

BIDDER must list all Subcontractors whose listing is required pursuant to the New Mexico Subcontractors Fair Practices Act and estimated work exceeds the threshold amount of Five Thousand and no/100 Dollars ($5,000.00) or ½ of 1% of the engineer's estimate as well as those under this threshold pursuant to the Public Works Minimum Wage Act. Both the General Contractor and all tiers of subcontractors must be actively registered with NM Department of Workforce Solutions prior to submission of bid.

Subcontractor #1	Company Name:		FEIN:	
	Address:		License Number:	
	Email:		City:	
	Phone Number:		State:	
	Fax Number:		Zip:	
	Work to be performed:		Contract Amount:	$
Subcontractor #2	Company Name:		FEIN:	
	Address:		License Number:	
	Email:		City:	
	Phone Number:		State:	
	Fax Number:		Zip:	
	Work to be performed:		Contract Amount:	$
Subcontractor #3	Company Name:		FEIN:	
	Address:		License Number:	
	Email:		City:	
	Phone Number:		State:	
	Fax Number:		Zip:	
	Work to be performed:		Contract Amount:	$
Subcontractor #4	Company Name:		FEIN:	
	Address:		License Number:	
	Email:		City:	
	Phone Number:		State:	
	Fax Number:		Zip:	
	Work to be performed:		Contract Amount:	$
Subcontractor #5	Company Name:		FEIN:	
	Address:		License Number:	
	Email:		City:	
	Phone Number:		State:	
	Fax Number:		Zip:	
	Work to be performed:		Contract Amount:	$

NOTICE TO BIDDER

List only one subcontractor for each category of work. Additional sheets listing subcontractors may be attached if necessary. Failure to comply with these requirements will make the bid non–responsive and the bid will be rejected.

Name of Bidder/ Contractor:		**By:**	
Title:		**Date:**	

Bid Bond

BIDDER (Name and Address):

_____
_____
_____

SURETY (Name and Address of Principal Place of Business):

_____
_____
_____

OWNER (Name and Address):

_____
_____
_____

BID
BID DUE DATE: _____
PROJECT (Brief Description Including Location):

_____
_____
_____

BOND
BOND NUMBER: _____
Date (Not later than Bid due date): _____
Penal Sum: _____ _____
(Words) (Figures)

IN WITNESS WHEREOF, Surety and Bidder, intending to be legally bounded hereby, subject to the terms printed on the reverse side hereof, do each cause this Bid Bond to be duly executed on its behalf by its authorized officer, agent, or representative.

BIDDER

_____ (Seal)
Bidder's Name and Corporate Seal

By: _____
Signature and Title

Attest: _____
Signature and Title

SURETY

_____ (Seal)
Surety's Name and Corporate Seal

By: _____
Signature and Title
(Attached power of Attorney)

Attest: _____
Signature and Title

Note: (1) Above address are to be used for giving required notice.

(2) Any singular reference to Bidder, Surety, OWNER or other party shall be considered plural where applicable.

Bidder and Surety, jointly and severally, bind themselves, their heirs, executors, administrators, successors, and assigns to pay to OWNER upon default of Bidder the penal sum set forth on the face of this Bond.

2. Default of Bidder shall occur upon the failure of Bidder to deliver within the time required by the Bidding Documents (or any extension thereof agreed to in writing by OWNER) the executed Agreement required by the Bidding Documents and any performance and payment Bonds required by the Bidding Documents.

3. This obligation shall be null and void if:
3.1 OWNER accepts Bidder's Bid and Bidder delivers within the time required by the Bidding Documents (or any extension thereof agreed to in writing by OWNER) the executed Agreement required by the Bidding Documents and any performance and payment Bonds required by the Bidding Documents, or
3.2 All Bids are rejected by OWNER, or
3.3 OWNER fails to issue a Notice of Award to Bidder within the time specified in the Bidding Documents (or any extension thereof agreed to in writing by Bidder and, if applicable, consented to by Surety when required by paragraph 5 hereof).

4. Payment under this Bond will be due and payable upon default by Bidder and within thirty (30) calendar days after receipt by Bidder and Surety of written notice of default from OWNER, which notice will be given with reasonable promptness identifying this Bond and the Project and including a statement of the amount due.

5. Surety waives notice of and any and all defenses based on or arising out of any time extension to issue Notice of Award agreed to in writing by OWNER and Bidder, provided that the total time for issuing Notice of Award including extensions shall not in the aggregate exceed 120 days from Bid due date without Surety's written consent.

6. No suit or action shall be commenced under this Bond prior to thirty (30) calendar days after the notice of default required in paragraph 4 above is received by Bidder and Surety and in no case later than one year after Bid due date.

7. Any suit or action under this Bond shall be commenced only in a court of competent jurisdiction located in the state in which the Project is located.

8. Notices required hereunder shall be in writing and sent to Bidder and Surety at their respective addresses shown on the face of this Bond. Such notices may be sent by personal delivery, commercial courier or by United States Registered or Certified Mail, return receipt requested, postage pre-paid, and shall be deemed to be effective upon receipt by the party concerned.

9. Surety shall cause to be attached to this Bond a current and effective Power or Attorney evidencing the authority of the offer, agent or representative who executed this Bond on behalf of Surety to execute, seal and deliver such Bond and bind the Surety thereby.

10. This Bond is intended to conform to all applicable statutory requirements. Any applicable requirement of any applicable statute that has been omitted from this Bond shall be deemed to be included herein as if set forth at length. If any provision of this Bond conflicts with any applicable statute, then the provision of said statute shall govern and the remainder of this Bond that is not in conflict therewith shall continue in full force and effect.

11. The term "Bid" as used herein includes a Bid, offer or proposal as applicable.

LOCAL/AREA/RESIDENT/RESIDENT VETERAN/RECYCLED CONTENT GOODS PREFERENCE CERTIFICATION FORM

Business Name: _____

Principle Place of Business: _____

Address: _____

State: _____

Zip Code: _____

DEFINITIONS:

Recycled content goods has the meaning set forth in NMSA 1978 § 13-1-21(A)(6) , as amended from time to time.

RESIDENT BUSINESS has the meaning set forth in NMSA 1978 § 13-1-21(A)(5) , as amended from time to time.

RESIDENT CONTRACTOR has the meaning set forth in NMSA 1978 § 13-4-2(A)(5) , as amended from time to time.

RESIDENT VETERAN BUSINESS has the meaning set forth in NMSA 1978 § 13-1-21(A)(7), as amended from time to time.

RESIDENT VETERAN CONTRACTOR has the meaning set forth in NMSA 1978 § 13-4-2(A)(6), as amended from time to time.

STATUTORY PREFERENCE means the preference for Resident Businesses, Resident Contractors, Resident Veteran Businesses, Resident Veteran Contractors, and Recycled Content Goods provided in NMSA 1978 §§ 13-1-21 or 13-4-5, as amended from time to time.

Qualifying company means a company that qualifies for a Statutory Preference under NMSA 1978 §§ 13-1-21 or 13-4-5, as amended from time to time.

LOCAL BUSINESS means a Resident Business or Resident Contractor which:

(a) Is authorized to do and is doing business under the laws of the State of New Mexico;
(b) Possesses a current city business registration;
(c) Maintains its principal place of business within the corporate limits of the city; and
(d) Agrees to furnish evidence, in a form suitable to the city, of its payment of New Mexico Gross Receipts Tax.

AREA BUSINESS means a Resident Business or Resident Contractor which:

(a) Is authorized to do and is doing business under the laws of the State of New Mexico;
(b) Possesses a current city business registration;
(c) Maintains a bona fide place of business within the corporate limits of the city, and agrees to conduct its activities pursuant to the contract for which it is bidding or proposing, to the extent practicable, from that place of business; and
(d) Agrees to furnish evidence, in a form suitable to the city, of its payment of New Mexico Gross Receipts Tax.

No bid or proposal shall receive both the Local Business and Area Business preferences.

INSTRUCTIONS:

In all invitations for bid and requests for proposals, the Statutory Preferences shall be applied in the manner set forth in NMSA 1978 §§ 13-1-21 or 13-4-5, as amended from time to time.

In addition to the Statutory Preferences, a preference for Local Businesses and Area Businesses shall be administered in the same manner as the Statutory Preferences, as follows:

(1) in the event a Local Business submits a qualifying bid or proposal and one or more Qualifying Companies also submits a bid or proposal, the Local Business shall receive a two percent (2%) preference in addition to (and not in lieu of) the Statutory Preference; and
(2) in the event an Area Business submits a qualifying bid or proposal and one or more Qualifying Companies also submits a bid or proposal, the Area Business shall receive a one percent (1%) preference in addition to (and not in lieu of) the Statutory Preference.

No bid or proposal shall receive both the Local Business and Area Business preferences.

In addition to the definitions and criteria set forth in this section, the central purchasing office may impose additional requirements regarding the nature, size and/or location of offerors or bidders in any request for proposals or invitation for bids. As a result, companies responding to such solicitations should review the solicitation documents thoroughly.

A COPY OF A RESIDENT BUSINESS OR CONTRACTOR / VETERAN BUSINESS OR CONTRACTOR CERTIFICATE ISSUED BY THE NEW MEXICO TAXATION AND REVENUE DEPARTMENT IS REQUIRED TO BE SUBMITTED ALONG WITH YOUR BID / OFFER IN ORDER TO QUALIFY FOR THE STATUTORY RESIDENT / VETERAN PREFERENCE. In addition, the attached Resident Veterans Preference Certification form must accompany any bid/offer and any business wishing to receive a resident veteran's preference must complete and sign the form.

REQUESTS FOR RECYCLED CONTENT GOODS PREFERENCE MUST BE ACCOMPANIED BY OFFICIAL / VERIFIABLE EVIDENCE THAT THE MATERIAL BEING BID / OFFERED CONTAINS THE MINIMUM RECYCLED CONTENT REQUIRED BY STATE STATUE.

THIS FORM MUST BE SUBMITTED AT THE TIME BIDS / OFFERS IN ORDER TO CLAIM LOCAL, AREA, RESIDENT, VETERAN OR RECYCLED CONTENT GOODS PREFERENCE.

PLEASE INDICATE THE TYPE OF PREFERENCE CLAIMED:

If your firm is a Qualifying Company please circle the type of preference for which your firm qualifies and indicate your appropriate annual revenue threshold:
RECYCLED CONTENT GOODS
RESIDENT BUSINESS
RESIDENT CONTRACTOR

RECYCLED CONTENT GOODS RESIDENT VETERAN BUSINESS
☐ Annual revenue up to $3,000,000.00
☐ Annual revenue more than $3,000,000.00 or more

RESIDENT VETERAN BUSINESS
☐ Annual revenue up to $3,000,000.00

☐ Annual revenue more than $3,000,000.00 or more

RESIDENT VETERAN CONTRACTOR
☐ Annual revenue up to $3,000,000.00
☐ Annual revenue more than $3,000,000.00 or more

If your firm is applying for either a Local or Area Preference, please circle the type of preference for which your firm qualifies. (Select only one):

LOCAL BUSINESS AREA BUSINESS

CITY OF RIO RANCHO BUSINESS LICENSE REGISTRATION NUMBER: _____
(Must be provided if claiming Local Business or Area Business Preference)

If submitting a joint bid/proposal please indicated proportion of work to be completed by qualifying company:

_____%

CERTIFICATION: I hereby certify that the information which I have provided on this form is true and correct, that I am authorized to sign on behalf of the business set out above and if requested by the City will provide, within 10 days of notice, the necessary documents to substantiate the information provided on this form.

By: _____ Title: _____ Date: _____

RESIDENT VETERANS PREFERENCE CERTIFICATION

_____ (NAME OF CONTRACTOR) hereby certifies the following in regard to application of the resident veterans' preference to this procurement:

Please check one box only:

☐ I declare under penalty of perjury that my business prior year revenue starting January 1 ending December 31 is less than $3M allowing me the 10% preference discount on this solicitation. I understand that knowingly giving false or misleading information about this fact constitutes a crime.

"I agree to submit a report, or reports, to the State Purchasing Division of the General Services Department declaring under penalty of perjury that during the last calendar year starting January I and ending on December 31, the following to be true and accurate:

"In conjunction with this procurement and the requirements of this business' application for a Resident Veteran Business Preference/Resident Veteran Contractor Preference under Sections 13-1-21 or 13-1-22 NMSA 1978, when awarded a contract which was on the basis of having such veterans preference, I agree to report to the State Purchasing Division of the General Services Department the awarded amount involved. I will indicate in the report the award amount as a purchase from a public body or as a public works contract from a public body as the case may be.

"I understand that knowingly giving false or misleading information on this report constitutes a crime."

I declare under penalty of perjury that this statement is true to the best of my knowledge. I understand that giving false or misleading statements about material fact regarding this matter constitutes a crime.

_____ _____

Signature of Business Representative Date

*Must be an authorized signatory for the Business.

The representations made in checking the boxes constitutes a material representation by the business that is subject to protest and may result in denial of an award or unaward of the procurement involved if the statements are proven to be incorrect.

CERTIFICATION OF BIDDER REGARDING
AFFIRMATIVE ACTION / EQUAL EMPLOYMENT OPPORTUNITY
AND NONDISCRIMINATION

PROJECT: Construction of New Senior Center

The Bidder hereby acknowledges and agrees to abide by the Special provisions for Affirmative Action/Equal Employment Opportunity and Nondiscrimination and all other provisions, regulations, of the OWNER for Affirmative Action/Equal Employment Opportunity and Nondiscrimination.

The Bidder has participated with any agency in a previous contract or subcontract subject to any Equal Employment Opportunity and Nondiscrimination in Employment requirements?

Yes ( ) No ( )

Compliance reports were required to be filed in connection with such contract or subcontract?

Yes ( ) No ( )

The Bidder has filed all compliance reports due under applicable instructions? If answer to this statement is "No, explain in detail on the reverse side of this certification.

_____
Name of Bidder

_____
Address of Bidder

_____
Telephone Number

_____
By (Signature) (Date)

_____
Printed Name & Title of Bidder's Authorized Representative.

NON-COLLUSION AFFIDAVIT OF PRIME BIDDER

State of _____}

County of _____}

Being first duly sworn deposes and says that:

1. He/She is the _____ of, the Bidder that has submitted the attached bid;

2. He/She is fully informed respecting the preparation and contents of the attached Bid and of all pertinent circuLocal Timeances respecting such Bid;

3. Such Bid is genuine and is not a collusive or sham Bid;

4. Neither the said Bidder nor any of its officers, partners, owners, agents, representatives, employees or parties in interest including this affiant, has in any way colluded, conspired, connived or agreed, directly or indirectly with any other bidder, firm or person to submit a collusive or sham Bid in connection with the Contract for which the attached Bid has been submitted or to refrain from Bidding in connection with such Contract, or has in any manner, directly or indirectly, sought by agreement or collusion or communications or conference with any other Bidder firm or person to fix the price or prices in the attached Bid or of any other Bidder, or to fix any overhead, profit or cost element of the Bid price of any other Bidder, or to secure through collusion, conspiracy, connivance or unlawful agreement any advantage against the City of Rio Rancho or any person interested in the proposed Contract; and

5. The price or prices quoted in the attached Bid are fair and proper and are not tainted by any collusion, conspiracy, connivance or unlawful agreement on the part of the Bidder or any of its agents, representatives, owners, employees, or parties in interest, including this affiant.

Subscribed and sworn to before me this_____ day
of_____, 20___

Signed: _____ Title: _____

_____
Notary Public

My commission expires: _____

LABOR RELATIONS DIVISION
121 Tijeras Ave NE, Suite 3000
Albuquerque, NM 87102
Phone: 505-841-4400
Fax: 505-841-4424

PUBLIC WORKS PROJECT REQUIREMENTS

As a participant in a Public Works project valued at more than $60,000 in the state of New Mexico, the following list addresses many of the responsibilities that are defined by statute or regulation to each project stakeholder.

Contracting Agency

- Ensure that all contractors wishing to bid on a Public Works project when the project is $60,000 or more are actively registered with the Public Works and Apprenticeship Application (PWAA) website: http://www.dws.state.nm.us/pwaa (Contractor Registration) prior to bidding.
- Please submit Notice of Award (NOA) and Subcontractor List(s) to the PWAA website promptly after the project is awarded.
- Please update the Subcontractor List(s) on the PWAA website whenever changes occur.
- All sub-contractors and tiers (excluding professional services) regardless of contract amount must be listed on the Subcontractor List and must adhere to the Public Works Minimum Wage Act.
- Ninety days after project completion please go into the PWAA system and close the project. Only contracting agencies are allowed to close the project. Agents or contractors are not allowed to close projects.

General Contractor

- Provide a complete Subcontractor List and Statements of Intent (SOI) to Pay Prevailing Wages for all contractors, regardless of amount of work, to the contracting agency within 3 (three) days of award.
- Ensure that all subcontractors wishing to bid on a Public Works project have an active Contractor Registration with the Public Works and Apprenticeship Application (PWAA) website: http://www.dws.state.nm.us/pwaa prior to bidding when their bid will exceed $60,000.
- Make certain the Public Works Apprentice and Training Act contributions are paid either to an approved Apprenticeship Program or to the Public Works Apprentice and Training Fund.
- Confirm the Wage Rate poster, provided in PWAA, is displayed at the job site in an easily accessible place.
- When the project has been completed, make sure the Affidavits of Wages Paid (AWP) are sent to the contracting agency.
- All subcontractors and tiers (excluding professional services) regardless of contract amount must pay prevailing wages, be listed on the Subcontractor List, and adhere to the Public Works Minimum Wage Act.

Subcontractor

- Ensure that all subcontractors wishing to bid on a Public Works project have an active Contractor Registration with the Public Works and Apprenticeship Application (PWAA) website: http://www.dws.state.nm.us/pwaa prior to bidding when their bid will exceed $60,000.
- Make certain the Public Works Apprentice and Training Act contributions are paid either to an approved Apprenticeship Program or to the Public Works Apprentice and Training Fund.
- All subcontractors and tiers (excluding professional services) regardless of contract amount must pay prevailing wages, be listed on the Subcontractor List, and adhere to the Public Works Minimum Wage Act.

Additional Information

Reference material and forms may be found in the New Mexico Department of Workforce Solutions Public Works web pages at: https://www.dws.state.nm.us/Labor-Relations/Labor-Information/Public-Works.

CONTACT INFORMATION

Contact the Labor Relations Division for any questions relating to Public Works projects by email at public.works@state.nm.us or call (505) 841-4400.

LABOR RELATIONS DIVISION **WWW.DWS.STATE.NM.US**

401 Broadway NE
Albuquerque, NM 87102
Phone: 505-841-4400
Fax: 505-841-4424

226 South Alameda Blvd
Las Cruces, NM 88005
Phone: 575-524-6195
Fax: 575-524-6194

1596 Pacheco St, Suite 103
Santa Fe, NM 87505
Phone: 505-827-6817
Fax: 505-827-9676

Wage Decision Approval Summary

1) Project Title: Construction of New Senior Center
Requested Date: 04/06/2020
Approved Date: 04/06/2020
Approved Wage Decision Number: SA-20-0724-B

Wage Decision Expiration Date for Bids: 08/04/2020

2) Physical Location of Jobsite for Project:
Job Site Address: 3241 Broadmoor Blvd. NE
Job Site City: Rio Rancho
Job Site County: Sandoval

3) Contracting Agency Name (Department or Bureau): City of Rio Rancho
Contracting Agency Contact's Name: Shonna Ybarra
Contracting Agency Contact's Phone: (505) 891-5044 Ext.

4) Estimated Bid Opening Date: 05/14/2020

5) Estimated total project cost: $2,850,000.00
a. Are any federal funds involved?: No
b. Does this project involve a building?: Yes - Construct an approximate 7,500 square foot new Senior Center on approximately 3 acres of land located at 3241 Broadmoor Blvd. NE in Rio Rancho. Work shall include site grading and drainage improvements, building and parking lot construction with associated landscaping and all utility line extensions.
c. Is this part of a larger plan for construction on or appurtenant to the property that is subject to this project?: No
d. Are there any other Public Works Wage Decisions related to this project?: No
e. What is the ultimate purpose or functional use of the construction once it is completed?: Construct an approximate 7,500 square foot new Senior Center on approximately 3 acres of land located at 3241 Broadmoor Blvd. NE in Rio Rancho. Work shall include site grading and drainage improvements, building and parking lot construction with associated landscaping and all utility line extensions.

6) Classifications of Construction:

Classification Type and Cost Total	Description
General Building (B) **Cost:** $2,850,000.00	Construct an approximate 7,500 square foot new Senior Center on approximately 3 acres of land located at 3241 Broadmoor Blvd. NE in Rio Rancho. Work shall include site grading and drainage improvements, building and parking lot construction with associated landscaping and all utility line extensions.

TYPE "B" – GENERAL BUILDING

Effective January 1, 2020

Trade Classification	Base Rate	Fringe Rate	Apprenticeship
Asbestos Workers/Heat and Frost insulators	32.26	12.06	0.60
Asbestos Workers/Heat and Frost insulators-Los Alamos County	34.69	12.06	0.60
Boilermaker/ blacksmith	34.97	28.85	0.60
Bricklayer/Block layer/Stonemason	24.46	8.81	0.60
Carpenter/Lather	24.63	11.24	0.60
Carpenter-Los Alamos County	27.80	13.19	0.60
Millwright/ pile driver	33.16	25.24	0.60
Cement Mason	21.07	10.33	0.60
Electricians-Outside Classifications-Zone 1			
Ground man	23.27	12.67	0.60
Equipment Operator	33.39	15.35	0.60
Lineman/Tech	39.28	16.91	0.60
Cable Splicer	43.21	17.95	0.60
Electricians-Outside Classification: Zone 2			
Ground man	23.27	12.67	0.60
Equipment Operator	33.39	15.35	0.60
Lineman/ technician	39.28	16.91	0.60
Cable Splicer	43.21	17.95	0.60

Electricians-Outside Classifications: Los Alamos			
Ground man	23.94	12.85	0.60
Equipment Operator	34.35	15.60	0.60
Lineman/ Technician	40.41	17.21	0.60
Cable Splicer	44.45	18.28	0.60
Electricians-Inside Classifications: Zone 1			
Wireman/ low voltage technician	32.70	11.18	0.60
Cable Splicer	35.97	11.28	0.60
Electricians-Inside Classification: Zone 2			
Wireman/ low voltage technician	35.64	11.27	0.60
Cable Splicer	38.91	11.37	0.60
Electricians-Inside Classification: Zone 3			
Wireman/ low voltage technician	37.61	11.33	0.60
Cable Splicer	40.88	11.43	0.60
Electricians-Inside Classification: Zone 4			
Wireman/ low voltage technician	41.20	11.44	0.60
Cable Splicer	44.47	11.53	0.60
Electricians-Inside Classification: Los Alamos			
Wireman/ low voltage technician	37.61	13.21	0.60
Cable Splicer	40.88	13.47	0.60
Elevator Constructor	43.80	35.25	0.60
Elevator Constructor Helper	35.04	35.25	0.60
Glazier			
Journeyman/ Fabricator	20.25	5.35	0.60

Delivery Driver	9.00	5.35	0.60
Ironworker	27.00	15.75	0.60
Painter (Brush/Roller/Spray)	17.00	6.88	0.60
Paper Hanger	17.00	6.88	0.60
Drywall- Light Commercial & Residential			
Ames tool operator	25.08	7.10	0.60
Hand finisher/machine texture	24.08	7.10	0.60
Plasterer	23.17	8.99	0.60
Plumber/Pipefitter	30.76	11.62	0.60
Roofer	25.23	7.97	0.60
Sheet metal worker			
Zone 1	31.03	17.26	.60
Zone 2 – Industrial	32.03	17.26	.60
Zone 3 – Los Alamos	33.03	17.26	.60
Soft Floor Layer	19.94	17.26	0.60
Sprinkler Fitter	30.90	22.29	0.60
Tile Setter	24.46	8.81	0.60
Tile Setter Helper/Finisher	16.53	8.81	0.60
Laborers			
Group I- Unskilled and semi-skilled	17.50	6.27	0.60
Group II- Skilled	18.50	6.27	0.60
Group III- Specialty	20.75	6.27	0.60
Masonry Laborers			
Group I- Unskilled and Semi-Skilled	18.00	6.27	0.60
Group II- Skilled	19.75	6.27	0.60
Group III- Specialty	20.25	6.27	0.60
Reinforcing iron workers and post tension	24.00	6.27	0.60

Operators			
Group I	20.95	7.27	0.60
Group II	23.11	7.27	0.60
Group III	23.57	7.27	0.60
Group IV	24.01	7.27	0.60
Group V	24.20	7.27	0.60
Group VI	24.41	7.27	0.60
Group VII	24.52	7.27	0.60
Group VIII	27.56	7.27	0.60
Group IX	29.95	7.27	0.60
Group X	33.35	7.27	0.60
Truck Drivers			
Group I-VII	16.45	7.87	0.60
Group VIII	16.51	7.87	0.60
Group IX	18.45	7.87	0.60

NOTE: All contractors are required to pay SUBSISTENCE, ZONE AND INCENTIVE PAY according to the particular trade. Details are located in a PDF attachment at WWW.DWS.STATE.NM.US. Search Labor Relations/Labor Information/Public Works/Prevailing Wage Rates.

For more information about the Subsistence, Zone, and Incentive Pay rates, or to file a wage claim, contact the Labor Relations Division at (505) 841-4400 or visit us online at www.dws.state.nm.us.

FIRST AMENDED AND RESTATED MEMORANDUM OF UNDERSTANDING PERTAINING TO THE DEVELOPMENT OF THE UNIVERSITY OF NEW MEXICO HEALTH SCIENCES RIO RANCHO CAMPUS

This First Amended and Restated Memorandum of Understanding ("**First Amended MOU**") pertaining to the University of New Mexico Health Sciences Rio Rancho Campus is entered into by and between the City of Rio Rancho, a New Mexico municipal corporation (the "**City**") and the Regents of the University of New Mexico, a constitutionally created educational institution of the State of New Mexico (the "**University**" or "**UNM**") for its public-serving healthcare and educational facilities known as the UNM Health Sciences Center, and more specifically for the UNM Health Sciences Rio Rancho Campus (each of the City and UNM a "**Party**" and collectively, the "**Parties**") as of the Effective Date, as hereinafter defined.

RECITALS

WHEREAS, the Parties previously entered into a Memorandum of Understanding pertaining to what was then referred to as the University of New Mexico UNM West Campus[1], with an effective date of December 10, 2015 (the "**Initial MOU**") acknowledging the construction of an initial academic building on the UNM West Campus, and providing a funding plan for the construction of a second academic building and related campus infrastructure in order to expand educational opportunities for the citizens of Rio Rancho, including a health sciences curriculum, in a fashion complementary to the UNM Sandoval Regional Medical Center, and

WHEREAS, the completed building is a 33,000 sq. ft. facility ("**Building 1**") in which the Health Sciences Center is providing a Bachelor's of Science in Nursing degree with the UNM College of Nursing, a Medical Assistant Certification in collaboration with Central New Mexico Community College (CNM), a Behavioral Health Clinic and Training Center in partnership with the UNM Medical Group, and a Health Careers Academy for High School Students in partnership with the UNM Health Sciences Center ("**Health Sciences Center**" or "**HSC**") Office of Diversity, Equity and Inclusion, and

WHEREAS, the proposed funding plan for the second academic building and related campus infrastructure did not materialize as contemplated, and

WHEREAS, the Parties remain committed to the expansion of post-secondary health science education and related medical facilities and medical services on the UNM West Campus, and

WHEREAS, the Parties wish to plan for, accommodate, and implement an expanded vision for the HS Rio Rancho Campus, and in order to do so, wish to replace the 2015 Memorandum of

[1] The UNM Health Sciences Rio Rancho Campus, formerly known as UNM West Campus, consisting of approximately 203 acres, is more particularly shown on **Exhibit 1** attached hereto.

Understanding, with this First Amended and Restated Memorandum of Understanding (the "**First Amended MOU**") effective as of the Effective Date of this First Amended MOU, and

WHEREAS, in recognition of the expanded scope and nature of post-secondary health science education, services and facilities to be placed on the UNM West Campus, the UNM West Campus shall hereinafter be designated the UNM Health Sciences Rio Rancho Campus (for purpose of this document, the "**HS Rio Rancho Campus**" or "**Campus**"), and

WHEREAS, the Health Sciences Center wishes to incrementally expand its post-secondary public educational offerings at the HS Rio Rancho Campus, with a particular emphasis on health science educational programming, to eventually include a full range of Health Sciences Center baccalaureate and advanced degree programs (the "**Health Sciences Programs**"); and the City wishes to see the continued development of the HS Rio Rancho Campus and the expansion of post-secondary educational opportunities, especially the Health Sciences Programs, to residents of the City, and

WHEREAS, the expansion of the HS Rio Rancho Campus will complement current operations and planned expansions at the UNM Sandoval Regional Medical Center, owned and operated by UNM Sandoval Regional Medical Center, Inc., a New Mexico University Research Park and Economic Development Act non-profit corporation, providing additional post-secondary sciences related educational opportunities; and

WHEREAS, the City and citizens of Rio Rancho have provided and continue to offer financial assistance to the University for health sciences education and medically related facilities and infrastructure via use of the receipts from the City's municipal higher education facilities gross receipts tax (the "**Higher Education GRT Tax**"), which are collected and placed in a separate and segregated fund (the "**Higher Education GRT Fund**") for these purposes, and

WHEREAS, the University is now prepared to construct the second building ("**Building 2**") called for in the Initial MOU at the HS Rio Rancho Campus, and

WHEREAS, the City is willing to further assist the University in this initiative by providing the necessary funding for Building 2 in the maximum amount stated in Paragraph 10 hereof and for the planning, development and construction of additional educational facilities and related infrastructure, and

WHEREAS, the City wishes to make available to the University and its Health Sciences Center the necessary funds from the Higher Education GRT Fund as provided herein so that the University can bring about the development of Building 2, as well as additional educational medical and ancillary buildings, facilities and related on and off-site infrastructure, landscaping, and related site amenities to provide the Health Sciences Programs and other higher education offerings and to otherwise promote and assist the development of the HS Rio Rancho Campus for the purposes intended (the "**Additional Educational Facilities**"), and

WHEREAS, in implementing the new expanded vision for the HS Rio Rancho Campus, the Parties wish to provide for and undertake the following initiatives on the Campus: (1)

construction of a new senior center, (2) construction of a new building for orthopedic surgery and rehabilitation, (3) the extension of Broadmoor Boulevard and the construction of a portion of No Name Road, (4) construction of Phase I of a campus park system, (5) conceptual approval of a curvilinear park running from west to east through the Campus, and (6) resolution of present and future stormwater drainage considerations, therefore:

MEMORANDUM OF UNDERSTANDING

1. The parties agree to the following terms, provisions, and conditions.

2. The Parties agree to support and work collaboratively to achieve the construction of the following four initiatives on the HS Rio Rancho Campus: (1) a new senior center, (2) a new building for orthopedic surgery and rehabilitation, (3) the extension of Broadmoor Boulevard and the construction of a portion of No Name Road, and (4) Phase I of a campus park system. The Parties also agree to (1) conceptually approve a curvilinear park running from west to east through the Campus, and (2) research present and future storm drainage considerations and/or a process by which to do so. The location of each of the initiatives and the conceptual layout of the curvilinear park are indicated on **Exhibit 2**, attached hereto. Each is described more fully in the following paragraphs.

3. Senior Center. The City will, at its sole cost and expense, design and construct a senior center, consisting of approximately 7,500 square feet, to be used for educational and related uses on the Campus on approximately 3.85 acres of land leased from the University at, essentially, no cost to the City. The Senior Center's functions and operations must comply substantially with the New Mexico Aging and Long Term Services Department program and funding requirements. The approximate location of the senior center is shown on **Exhibit 2** and more particularly on **Exhibit 3**. The understandings on the development and implementation of the senior center, and necessary related infrastructure are more fully set forth in the proposed ground lease to be entered into by and between the City and UNM, a copy of which is available to each of the Parties. The senior center and related on and off-site improvements are expected to be constructed, in place and operational no later than December 31, 2021.

4. Center of Excellence for Orthopedic Surgery and Rehabilitation (Building 2). The University will construct an orthopedic surgery and rehabilitation center, estimated to cost approximately $20,802,411, consisting of (1) approximately 48,000 square feet, affording clinical services and post-secondary health sciences related educational opportunities with teaching, research, clinic, rehabilitation functions and learning opportunities more particularly described in **Exhibit 4**, consisting of four pages, attached hereto, and (2) related campus core infrastructure, including, but not limited to utility extensions and installation, internal roadways, parking areas, curb, gutter, lighting, pedestrian pathways, signage, landscaping, and other elements ancillary to the development of a campus setting (collectively, the "**Orthopedic Center**"),"), the location of which is indicated on the project site plan for the HS Rio Rancho Campus Building 2 – Orthopedic Surgery and Rehabilitation Center of Excellence, attached as **Exhibit 5**. The Orthopedic Center will be located on the Campus adjacent to and southeast of the Sandoval County Regional Medical Center at the location shown on **Exhibit 6**. The Orthopedic Center will be constructed, in place and operational no later than June 30, 2022, assuming the necessary funding is in place no later

than June 30, 2020. Otherwise, the Orthopedic Center will be constructed, in place and operational within 24 months after the necessary funding is made available for the Orthopedic Center.

5. Extension of Broadmoor Boulevard and Construction of a Portion of No Name Road. The City will, at its sole cost and expense, design, construct and extend (1) Broadmoor Boulevard from Paseo Volcan north to what is known as "No Name Road" within the 53 feet wide area presently reserved by the University for future road right of way (the "**Broadmoor Extension**"), and (2) No Name Road from the northernmost point of the Broadmoor Extension, west for a duration of approximately 650 feet within the entirety of a 68 foot right-of-way, both of which areas will be dedicated by and from the University to the City, at no cost to the City. The Broadmoor Extension and the No Name Road construction will be located as shown on **Exhibit 7** and will be constructed within the right-of-way shown thereon. The Broadmoor Extension and the No Name Road construction are expected to be in place and operational no later than December 31, 2021.

6. Campus Park (Phase I). The City will, at its sole cost and expense, plan, design and construct Phase I of a Campus Park system, which Campus Park system will include and extend from Campus Park Phase I, north to and through Campus Park Phase II, both of which are located west and slightly south of Rio Rancho City Hall, to and along a proposed curvilinear park area running from west to east through the HP Rio Rancho Campus, all as shown on **Exhibit 2** attached hereto. Campus Park Phase I, which is more particularly described as Lot 3F of City Centre subdivision, and Campus Park Phase II, which is more particularly described as Lot 3E of City Centre subdivision, will be combined as one parcel following the vacation of Commerce Street.

7. Curvilinear Park. The Parties agree to pursue, no later than the completion of the last of the four above-described projects now underway, the planning, design and construction of a curvilinear park running from west to east through the Campus. The proposed curvilinear park is shown conceptually on **Exhibit 2**.

8. Stormwater Drainage. The Parties agree to work cooperatively to address and resolve the existing and permanent stormwater situation created and exacerbated as a result of current and projected future development within the boundaries of the basin map attached as Figure 1 to the Jacobs City Centre Drainage Facility Plan 2018 Update, a copy of which basin map is attached hereto as **Exhibit 8**. Such efforts shall include, but not be limited to, a joint effort, with possible participation from other affected persons and entities, to prepare an updated drainage plan addressing current development, current planning efforts and historic, developed and future developed flows. This is with the understanding that the City will, in the interim, continue to enforce State statutory provisions pertaining to stormwater flow and the protection of downstream owners provided for therein.

9. The City transferred $2,000,000 of the then uncommitted fund balance of the Higher Education GRT Fund to the University on December 15, 2015 "Previously Transferred Higher Education GRT Funds", pursuant to the execution of the initial MOU, to enable the Health Sciences Center to renovate and improve Building 1, and initiate actions for necessary planning, design, and construction of infrastructure and other site improvements necessary to support the development of Building 2. Of the $2,000,000 advanced by the City, the University retains

$1,327,463 of the Previously Transferred Higher Education GRT Funds, which will be applied to the cost of development of Building 2, now known as the Orthopedic Center.

10. The remaining anticipated cost of the Orthopedic Center in the amount of $19,474,948 will be funded through the Higher Education GRT Fund with a combination of available Fund cash and revenue bond or loan proceeds obtained from bonds or other debt financing **"Debt Financing"** provided by the New Mexico Finance Authority ("**NMFA**"), with bond or other debt repayment funded solely by and from Higher Education GRT Fund gross receipts tax revenues pursuant to an arrangement between the City and NMFA. The Parties understand and agree that, because the Orthopedic Center will not be owned or operated by the City, if interest payable in connection with the borrowing is to be excludable for federal income tax purposes, an appropriate officer from UNM will be required to execute the loan agreement as to representations and covenants relating to compliance with the applicable federal tax requirements in connection with the use of the financed facility, or alternatively, a tax compliance agreement for the same purpose, and a tax compliance certificate to be delivered in connection with the closing of the financing.

11. Debt Financing obtained from NMFA will be delivered to UNM in accordance with the NMFA process for requisitioning loan proceeds, which process is set forth in Exhibit 9 attached hereto. The City will cooperate with the University so the University may submit requisitions directly to the NMFA to obtain Debt Financing proceeds. During construction of Building 2, funding shall be utilized in the following order: First, all Previously Transferred Higher Education GRT Funds; Second, proceeds from Debt Financing; Third, cash from the Higher Education GRT Fund. The City will disburse funds from the Higher Education GRT Fund only after all proceeds from Previously Transferred Higher Education GRT Funds and Debt Financing have been expended. Upon request, substantiated by invoices for actual project costs, and approval by the City, the City will disburse funds to the University from the Higher Education GRT Fund within ten (10) working days.

12. In the event the cost of the development of the Orthopedic Center is more than $20,802,411, the parties agree to work cooperatively to identify additional resources in order to complete construction, including from available balances in the Higher Education GRT Fund. In the event the cost of the development of the Orthopedic Center is less than the total estimated project cost of $20,802,411, the excess funds shall be reserved in the Higher Education GRT Fund.

13. All Higher Education GRT Funds generated by the Higher Education GRT Tax are to be used to pay for costs associated with Building 1, the Orthopedic Center, and Additional Educational Facilities, the construction, operation and use of which must be consistent with the intended purpose of the Higher Education GRT Tax.

14. The City maintains all revenues from the Higher Education GRT Tax in the Higher Education GRT Fund. Notwithstanding anything to the contrary contained herein, the City's financial obligations under this Memorandum of Understanding, and under any other agreement or instrument executed pursuant to the parties' understanding herein, shall be strictly limited to sums in the Higher Education GRT Fund, and no other funds of the City may be used to satisfy such obligations. Neither the University nor any affiliate or creditor of the University shall have any

claim to City property, funds or revenues other than the Higher Education GRT Fund to satisfy any financial obligation of the City hereunder.

15. Should the University cease to use Building 1, the Orthopedic Center, or the Additional Educational Facilities for an educational or health sciences related medical facility and/or uses related to the educational or institutional mission of the University, the University shall reimburse the City prorata, based on the period of use and the remaining functional life of the facility no longer in use for education or medical purposes, for funds advanced by the City from its Higher Education GRT Fund for Building 1, the Orthopedic Center, and/or the Additional Educational Facilities no longer in use. To the extent that the University's discontinuation of or change in use of the Orthopedic Center results in private business use which requires remedial action in connection with tax-exempt financing, the University shall, to the extent permitted by law, reimburse the City for the costs associated with such remedial action (e.g. defeasance of the tax-exempt bonds or debt obligation on a taxable basis), including costs of issuance of the defeasance obligations.

16. The City Manager or his designee, and a designated representative of the Health Sciences Center shall meet, at least, quarterly, starting with the calendar quarter beginning on January 1, 2020, to discuss items of mutual interest, including, but not limited to, the status of Building 1, the Orthopedic Center, and Additional Educational Facilities and the status of the Higher Education GRT Tax and the Higher Education GRT Fund. A designated representative of the Health Sciences Center, on an annual basis starting with the calendar year beginning on January 1, 2020, shall update the Rio Rancho Governing Body at one of their meetings on the status of Building 1, the Orthopedic Center, and Additional Educational Facilities.

17. All notices and other communications under this Memorandum of Understanding shall be in writing and shall be deemed duly given (i) when delivered personally or by prepaid overnight courier, with a record of receipt, (ii) the third day after mailing if mailed by certified mail, return receipt requested, or (iii) the day of transmission, if sent electronically, if there is proof of receipt on the day of transmission or the first day thereafter on which receipt can be verified, to the Parties at the following physical, mail, or e-mail addresses (or to such other address, telecopy number, or e-mail address as a Party may have specified by notice given to the other Party pursuant to this provision):

If to the City:
David S. Campbell, City Manager
City of Rio Rancho
3200 Civic Center Circle NE
Rio Rancho, NM 87144-4501
Telephone: (505) 891-5002
E-mail: dcampbell@rrnm.gov

With a copy to:
Office of the City Attorney
Attention: Gregory F. Lauer, Esq.
City of Rio Rancho
3200 Civic Center Circle NE
Rio Rancho, NM 87144
Telephone: (505) 896.8711
E-mail: glauer@rrnm.gov

If to the University:	Chancellor for Health Sciences MSC09 5300, 1 University of New Mexico Albuquerque, NM 87131-5001 Telephone: (505) 272-5849
With a copy to:	Executive Director Health Sciences Rio Rancho Campus UNM Health Sciences 3001 Broadmoor Boulevard NE Rio Rancho, NM 87144 Telephone: (505) 994-7430 E-mail: jsilva@srmc.unm.edu
and	
	HSC Office of University Counsel Attn: Deputy University Counsel for Health Sciences
Street Address:	1001 Stanford Drive NE, Suite 3010 Albuquerque, NM 87131
Mailing Address:	MSC09 5300, 1 University of New Mexico Albuquerque, NM 87131-0001 Telephone: (505) 272-2377 E-mail: counsel@unm.edu
and	
	Director of Real Estate University of New Mexico
Street Address:	2811 Campus Boulevard NE Albuquerque, NM 87106
Mailing Address:	MSC 06 3595, 1 University of New Mexico Albuquerque, NM 87131-0001 Telephone: (505) 277-4620 E-mail: tneale@unm.edu

18. This First Amended MOU may be executed in one or more counterparts, including electronic counterparts, each of which shall be a fully binding and enforceable contract and agreement against the Party signing such counterpart, but all such counterparts shall together constitute but one agreement.

19. This First Amended MOU may be amended, upon mutual agreement of the Parties, by written agreement executed by each of the Parties.

20. The Parties agree to hereafter negotiate and enter into such further and more definitive agreements, as may be necessary, to effectuate the transactions contemplated by this First Amended MOU.

21. The Parties agree to the terms and conditions of this First Amended MOU and shall endeavor in good faith to fulfill their respective obligations as set forth herein.

22. Force Majeure. If either Party cannot perform any of its obligations under the terms of this First Amended MOU due to event(s) beyond its control, the time provided for performance of such obligations shall be extended by a period of time equal to the duration of such event(s). If either Party desires to invoke the provisions of this section, it shall provide written notice to the other of the reasons for the delay and shall use best reasonable efforts to mitigate the effects of such occurrence. Event(s) beyond a Party's control include, but are not limited to, acts of God, war, civil commotion, labor disputes strikes, fire, flood, or other casualty, shortages of labor and materials, government regulation or restriction and weather conditions.

23. This First Amended MOU is signed, sealed, executed and delivered by the Parties as of the date indicated next to the respective signatures, with the Effective Date to be the date of the last signature affixed hereto.

CITY OF RIO RANCHO, a New Mexico municipal corporation

By: _____ Date: 2/3/2020
David S. Campbell, City Manager

APPROVED AS TO FORM:

By: _____ Date: 02.03.20
Gregory F. Lauer, City Attorney
City of Rio Rancho

REGENTS OF THE UNIVERSITY OF NEW MEXICO, a constitutionally created educational institution of the State of New Mexico

By: _____ Date: 2/14/2020
Teresa Costantinidis, Senior Vice President
for Finance and Administration
University of New Mexico

REVIEWED AND APPROVED:

UNM HEALTH SCIENCES CENTER

By: _____ Date: 2/10/20
Paul B. Roth, MD, MS
Executive Vice President and
Chancellor for Health Sciences CEO

By: _____ Date: 2/5/2020
Jamie Silva-Steele
Executive Director Health Sciences
Rio Rancho Campus

By: _____ Date: 2/14/2020
Thomas M. Neale, Director
UNM Real Estate Department

APPROVED AS TO FORM:

By: _____ Date: 2/7/2020
Scot Sauder
Deputy University Counsel
for Health Sciences

ACKNOWLEDGEMENT OF THE CITY OF RIO RANCHO

STATE OF NEW MEXICO)
) ss.
COUNTY OF SANDOVAL)

This instrument was acknowledged before me this 3rd day of February, 2020, by David S. Campbell, City Manager, City of Rio Rancho, a New Mexico municipal corporation.

Lacy John
Notary Public

My commission expires:
6-10-2023

OFFICIAL SEAL
Lacy John
NOTARY PUBLIC
STATE OF NEW MEXICO
My Commission Expires 6-10-23

ACKNOWLEDGEMENT OF THE UNIVERSITY

STATE OF NEW MEXICO)
) ss.
COUNTY OF BERNALILLO)

OFFICIAL SEAL
Virginia Brooks
NOTARY PUBLIC
STATE OF NEW MEXICO
My Commission Expires: 12/2/2022

This instrument was acknowledged before me this 14 day of February, 2020, by Teresa Costantinidis, Senior Vice President for Finance and Administration, University of New Mexico, on behalf of the Regents of the University of New Mexico.

Virginia Brooks
Notary Public

My commission expires:
12/2/2022

EXHIBIT 1

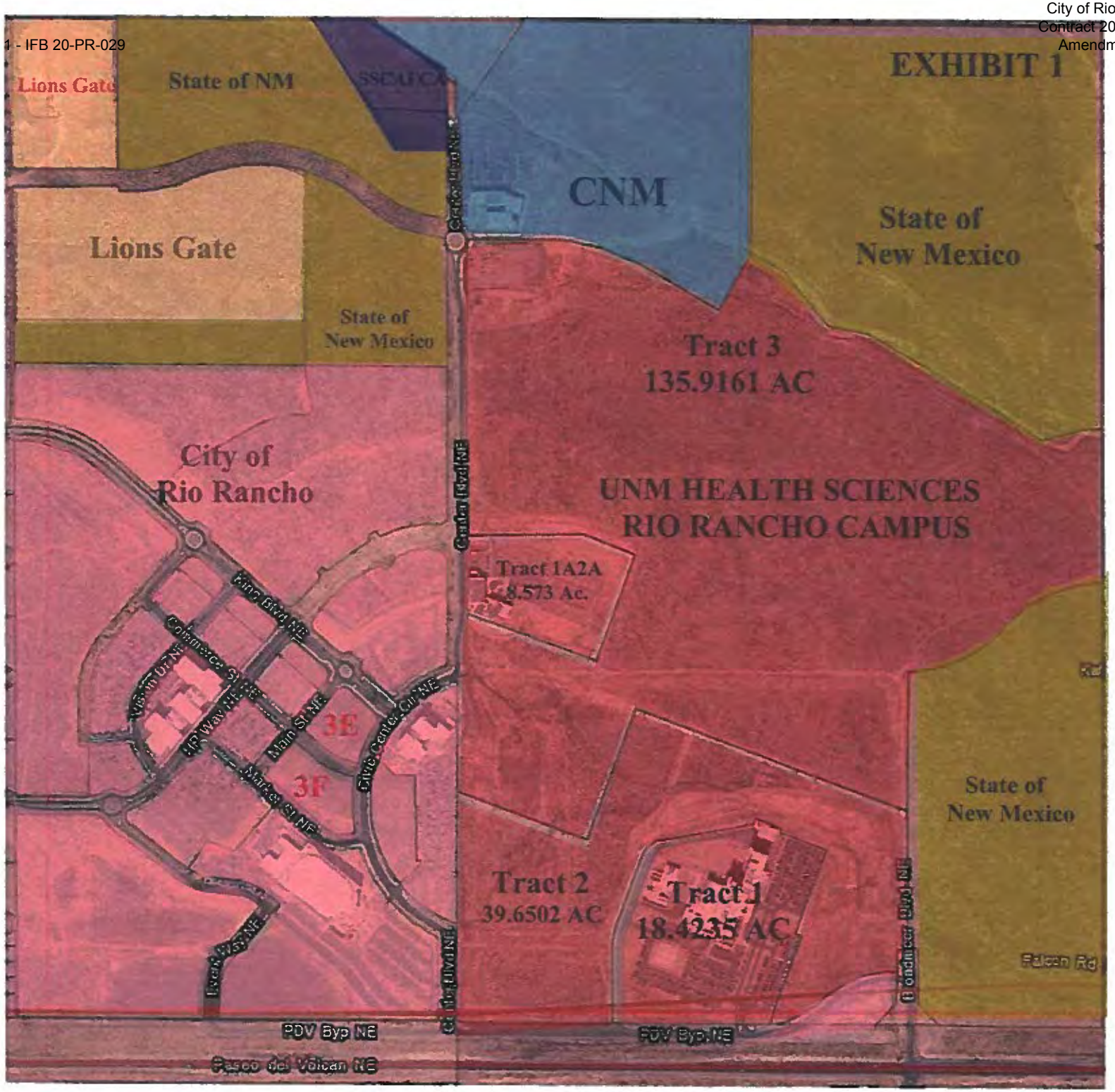
Lions Gate
State of NM
CNM
Lions Gate
State of New Mexico
State of New Mexico
Tract 3
135.9161 AC
City of Rio Rancho
UNM HEALTH SCIENCES
RIO RANCHO CAMPUS
Tract 1A2A
8.573 Ac.
Main Blvd NE
Main St NE
3E
3F
Civic Center Cir NE
State of New Mexico
Tract 2
39.6502 AC
Tract 1
18.4235 AC
Falcon Rd
PDV Byp NE
Paseo del Volcan NE

EXHIBIT 2

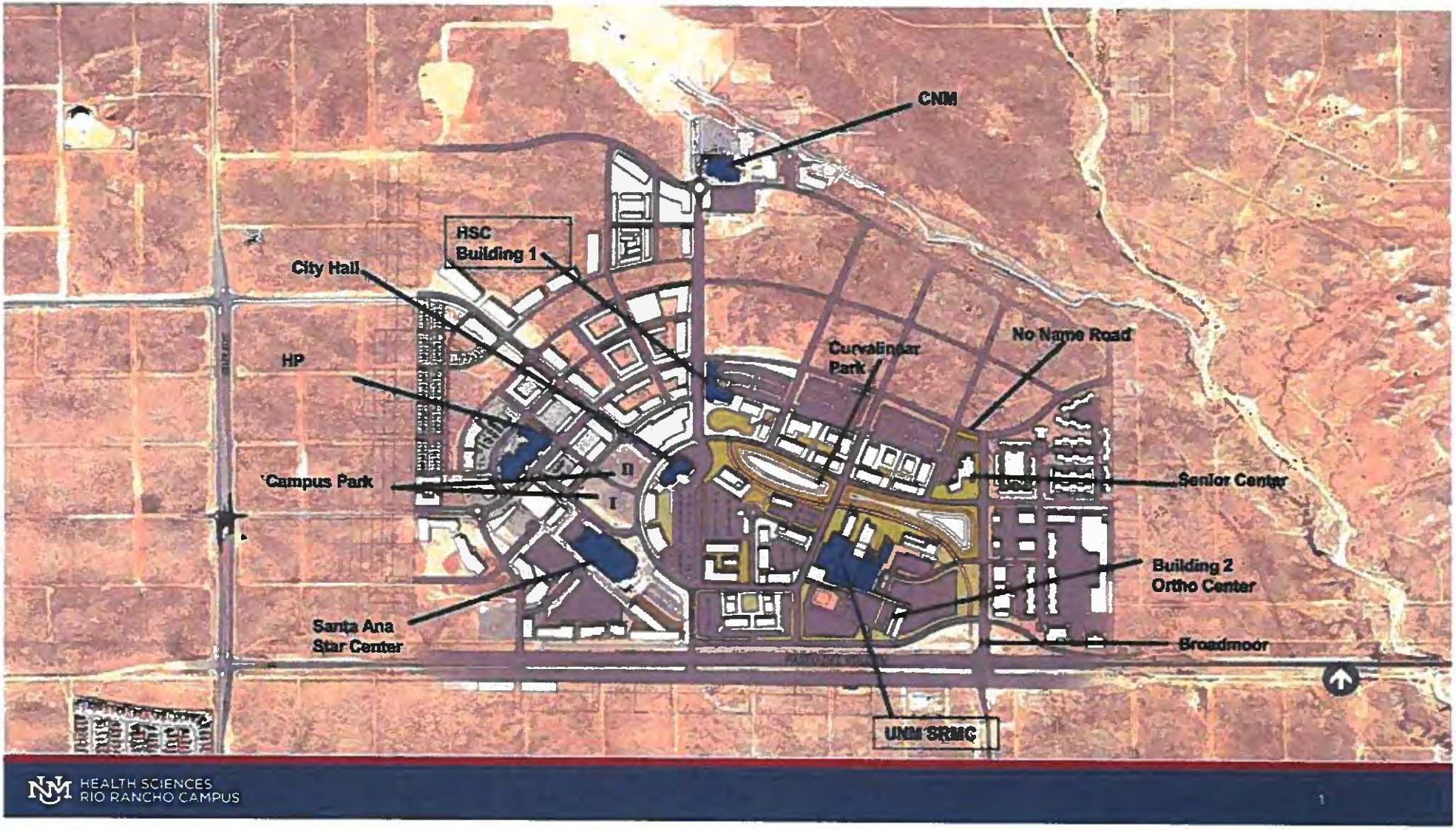
CNM
HSC
Building 1
City Hall
HP
Curvalinear
Park
No Name Road
Campus Park
II
I
Senior Center
Building 2
Ortho Center
Santa Ana
Star Center
Broadmoor
UNM SRMC
HEALTH SCIENCES
RIO RANCHO CAMPUS

EXHIBIT 3

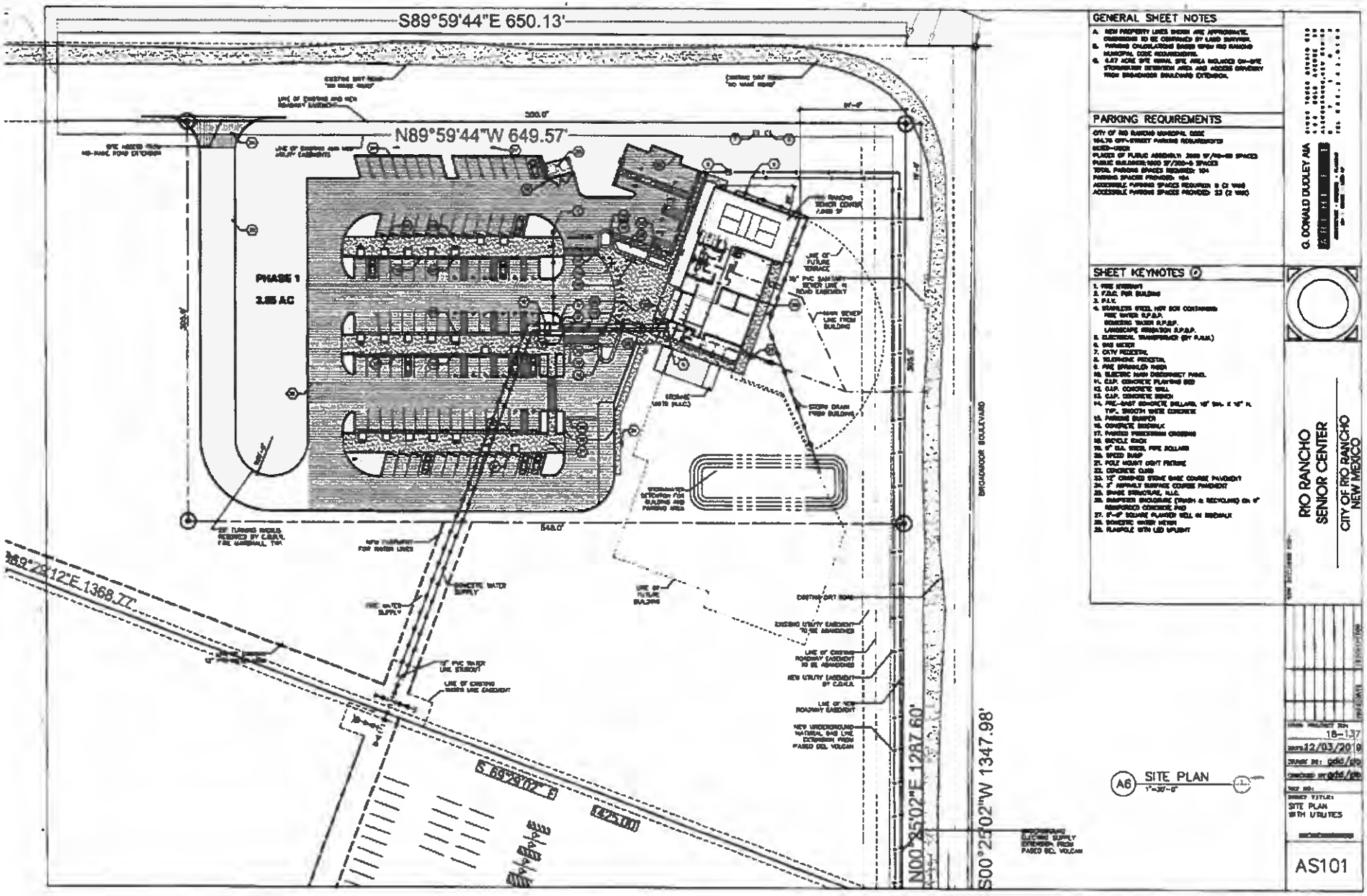
S89°59'44"E 650.13'
N89°59'44"W 649.57'
PHASE 1
2.85 AC
S89°28'12"E 1368.77'
S 69°28'02" E
N00°35'02"E 1287.60'
S00°25'02"W 1347.98'
BROADMOOR BOULEVARD
GENERAL SHEET NOTES
PARKING REQUIREMENTS
SHEET KEYNOTES
A6 SITE PLAN
1"=30'-0"
G. DONALD DUDLEY AIA
RIO RANCHO
SENIOR CENTER
CITY OF RIO RANCHO
NEW MEXICO
18-137
12/03/2019
SITE PLAN
WITH UTILITIES
AS101

EXHIBIT 4

Academic – Teaching

~6,572 NSF

Proposed 10.5 providers:

- 6 adult reconstruction, 1.5 Physical Medicine & Rehabilitation, 1 General Orthopedist, 1 Spine specialist, and 6 Advanced Practice Providers
- Spine and Sports Medicine as growth permits
- Internal Medicine on site

Learner Spaces:

- Dictation
- Shared conference/education
- Large Conference/education
- Innovation Center/Virtual Reality
- Learner Lockers/Lounge

Clinical and Research Faculty/Provider Offices, Staff, Reception

Summary of Learners Served in Proposed Facility:

Clinic: 5 Medical Assistants
8 Radiology Techs
5 Residents and Fellows

Research:
20 undergraduate, Masters, PhD, and post-doctoral Bioengineering students
20-25/year medical students, residents, and Fellows

Rehabilitation:
18 students in varying programs, including Physical Therapy and Occupational Therapy students, Physical Therapy Techs and Physical Therapy Assistants, Doctor of Physical Therapy, and Speech and Language students.

Academic – Research

~6,700 NSF

Orthopaedic Biomechanics & Biomaterials Laboratory (OBBL) and Orthopaedic Tissue Engineering with Additive Manufacturing (Ortho TEAM)

- Projects fall into the following five categories: computational finite element modeling, synthetic and cadaveric bone experimental testing, biomedical device development, materials characterization, and tissue engineering
- Research currently in multiple locations, with shared space and equipment
- Building infrastructure included in costs; Equipment supplied by research

Spaces:

- Wet Lab, Freezer, Prep, Storage
- Microvascular surgery, Gross Anatomy, Experimental Testing
- Machine Shop
- Break Area

Gait Lab to be used by research, education, as well as by the Rehab Center

Learners: 20 undergraduate, masters, PhD and post-doctoral Bioengineering students, and 20-25 per year of medical students, residents, and Fellows.

Academic Orthopaedic Clinic

~12,280 NSF

Multiple specialty orthopaedic providers from UNM School of Medicine manage patient care and provide teaching opportunities

Spaces:

- 40 exam rooms (5 pods of 8 exams) configured to accommodate patients, learners, as well as the providers
- Cast room
- Digital radiology with tech support area
- Procedure Rooms with accommodations for Ultrasound and C-arm use
- Waiting (Registration consolidated at the building entry)

Learners: 5 residents and Fellows, 5 medical Assistants, 8 Radiology Techs

Rehabilitation Center

6,614 NSF

Configured to accommodate pre-habilitation and rehabilitation in a teaching environment

Spaces:

- Gym with track
- Therapy Pool with treadmill
- Patient Exam and Treatment Rooms
- Occupational Therapy with Activity of Daily Living accommodations
- Greeting/Waiting
- Workspace
- Break area
- Conference space shared with academic offices

Learners: 18 students in varying programs, including Physical Therapy and Occupational Therapy students, Physical Therapy Technician and Physical Therapy Assistant students, Doctor of Physical Therapy and Speech and Language Students

Project Site Plan

Extent of Current Orthopaedic Project

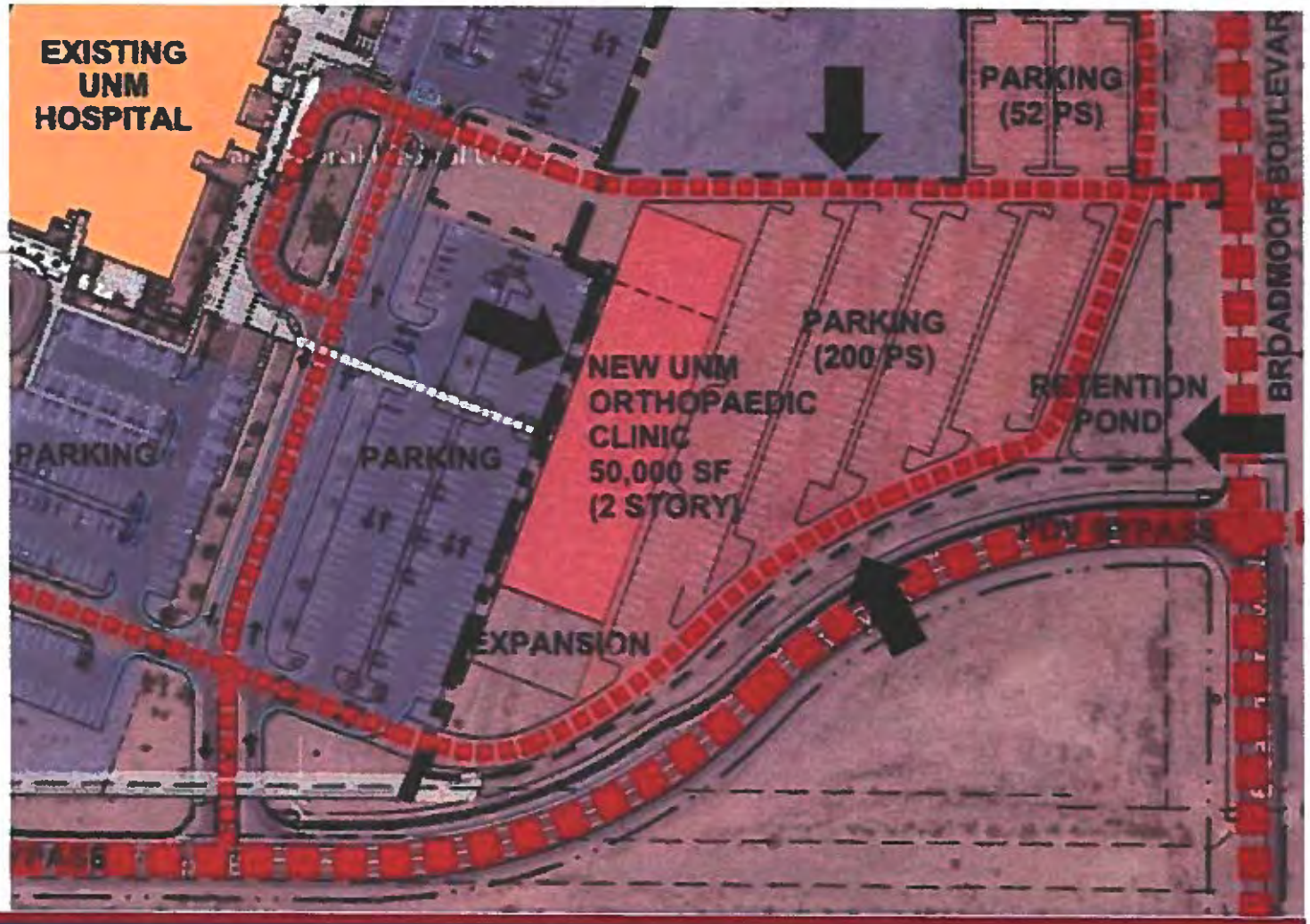

EXHIBIT 6

Campus Site Plan

ARCHITECTURAL SITE PLAN - SITE OPPORTUNITIES A-3f

SCALE: 1:200

H+M DESIGN GROUP

EXHIBIT 7

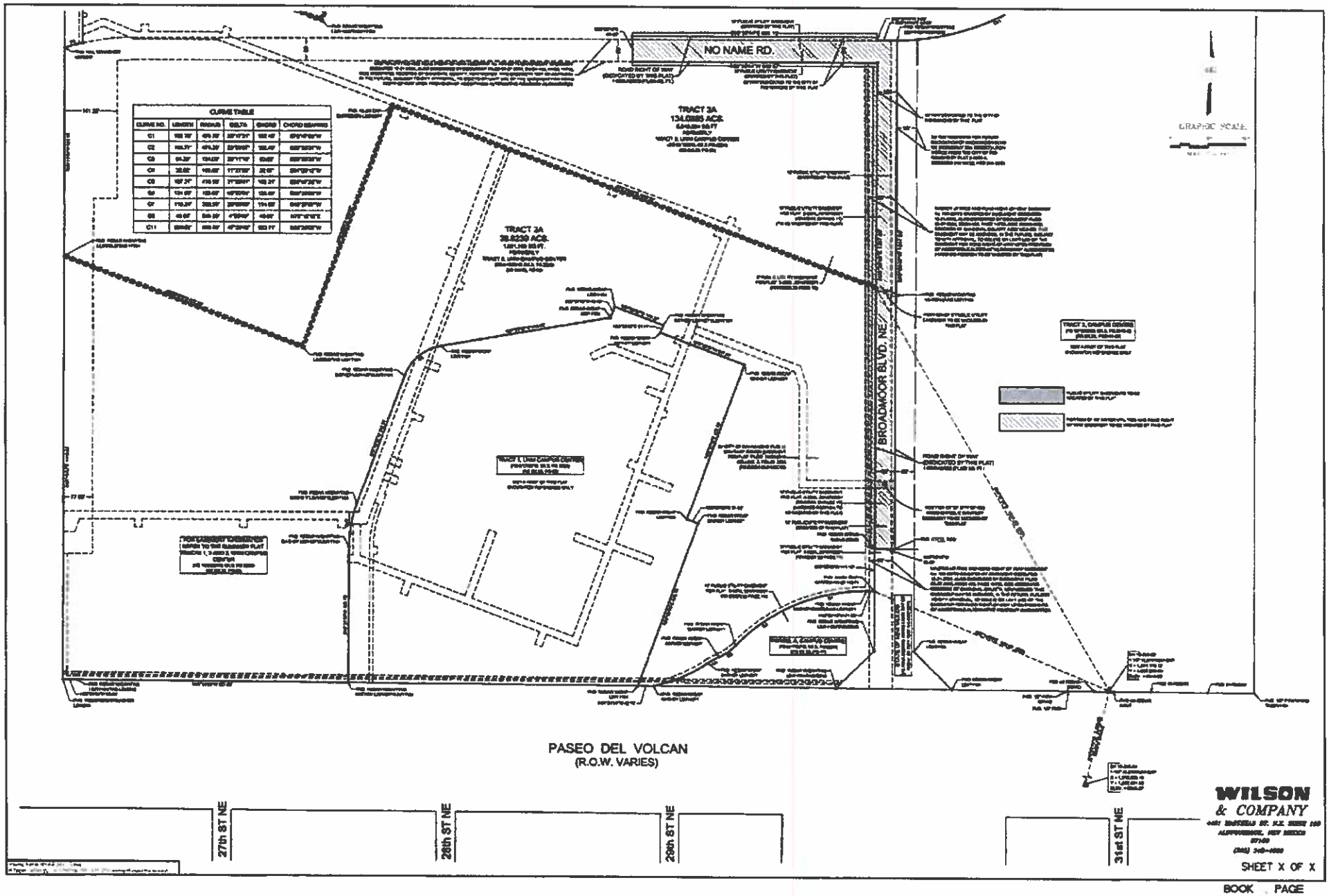
NO NAME RD.
TRACT 3A
134.0885 ACS.
TRACT 3A
39.8239 ACS.
BROADMOOR BLVD. NE
GRAPHIC SCALE
PASEO DEL VOLCAN
(R.O.W. VARIES)
27th ST NE
28th ST NE
29th ST NE
31st ST NE
WILSON
& COMPANY
SHEET X OF X
BOOK PAGE

EXHIBIT 8

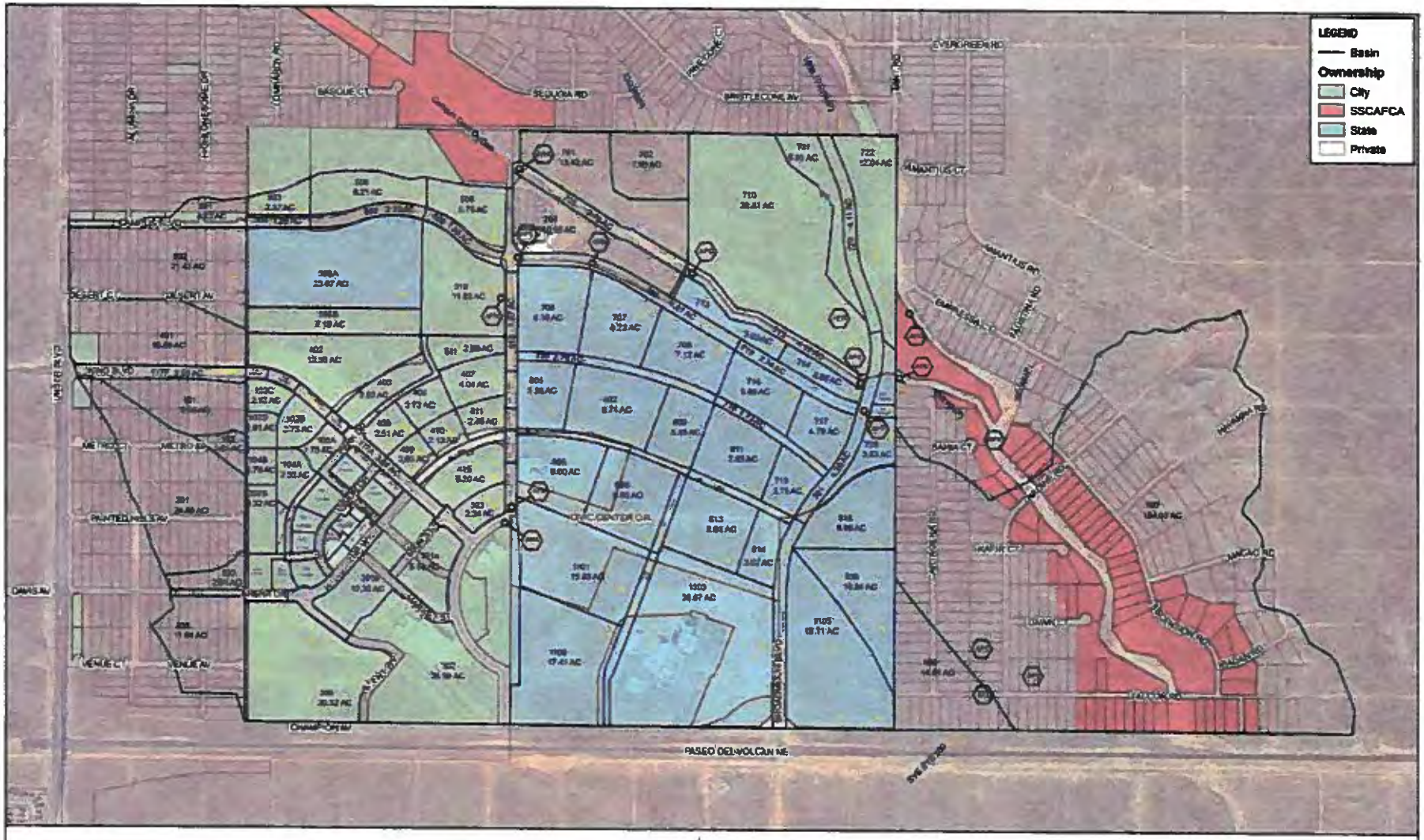

Figure 1
Basin Map
Rio Rancho

Source:
Aerial: ESRI World Imagery, 2/14/2016

ch2m

EXHIBIT 9

Upon closing of the Higher Education GRT bonds issued by the New Mexico Finance Authority, proceeds available for the Orthopedic Center (the "Project") will be on deposit at the Office of the Trustee, currently Bank of Albuquerque. The funds will be held and disbursed by the Trustee to ensure that proper record keeping is being maintained, that only authorized and allowable expenditures related to the Project are being paid, and that there is compliance with bond and tax requirements.

A signature(s) from an authorized officer(s) from UNM and the City of Rio Rancho shall be required for each funding request submitted. Funding requests shall be submitted to the Trustee, and will be processed as follows:

1) **Payment by UNM. If Project costs/invoices are paid directly by UNM, a requisition request for reimbursement shall be submitted, with proof of payment(s) and supporting documentation for reimbursement; or**
2) **Payment by Trustee. A requisition request accompanied by invoices may be submitted to be paid per each vendor's payment instructions, and wherein the Trustee will pay each vendor directly through check or wire, as specified in the requisition request.**

It is contemplated that fully completed and executed requisition requests will be paid by the Trustee within one to two business days of receipt. The approved requisition form, which shall be prepared in a user-friendly format, will be specified and included as one of the bond closing documents.

GROUND LEASE

This ground lease ("Lease") is dated for reference purposes as of February 1, 2020, and is made and entered into by and between The City of Rio Rancho, a Home Rule Municipal Corporation of the State of New Mexico ("City"), and The Regents of the University of New Mexico, a body corporate of the State of New Mexico ("UNM").

WHEREAS, UNM owns certain land which the City desires to Lease;

WHEREAS, upon said land, City seeks to construct a public senior center (the "Center") and related improvements consistent with the conceptual plan attached to this Lease as Exhibit B ("Conceptual Plan"); and,

WHEREAS, City plans to construct certain off-site improvements ("Off-Site Improvements") to accommodate the Center.

In consideration of the agreements contained in this Lease, and other good and valuable consideration, the receipt and sufficiency of which are acknowledged by the parties to this Lease, it is agreed as follows:

1. Lease. The Parties agree to enter this lease based upon the terms and conditions set forth herein.

2. Property. UNM leases to City and City leases from UNM, subject to the terms and conditions of this Lease, the land described on Exhibit A ("Property"). In the future, City and UNM may negotiate an amendment to this Lease to extend this Lease to cover property adjacent to the Property.

3. Term. The term of this Lease ("Term") shall begin on the date of this Lease, ("Lease Commencement Date") and, unless earlier terminated, end on the date that is fifty (50) years after the Lease Commencement Date.

4. Rent. City shall pay UNM annual rent ("Rent") in the amount of One Dollar ($1.00) per year beginning on the Lease Commencement Date and continuing on the same day of each year thereafter during the Term. Rent shall be paid by City to UNM at UNM's notice address (as set forth below), or such other address as is designated by UNM in a Notice (as defined below) to City. Rent shall be paid to UNM without further notice or demand. Rent shall be paid when due, without deduction or setoff.

5. Possession. Possession of the Property shall be considered delivered by UNM to City as of the Lease Commencement Date.

6. Use. City acknowledges that UNM's acquisition of the Property from the New Mexico State Land Office ("NMSLO") is subject to an agreement between UNM and NMSLO executed on or about October 6, 2006 (the "Exchange Agreement"). The Exchange Agreement provides, among other things, that the Property will be used for

educational and related purposes. City acknowledges that the Exchange Agreement Requires that the City shall only use the Property in a manner which: 1) is consistent with the Exchange Agreement; and, 2) does not result in a default by UNM pursuant to the Exchange Agreement. The term "use" regarding the Property in this lease means the City's use of the Property principally for the Center's construction, maintenance, functions, and operations and, the Center serving educational and related purposes consistent with the provisions of the Exchange Agreement and consistent with the City's Charter and Ordinances. City will not use the Property in any way that is inconsistent with the Center's purposes without UNM's prior written consent. Within ninety (90) days of receiving the City's request for a non-conforming use of the property, UNM agrees to approve or deny any such request. City shall obtain all permits, authorizations, certificates and approvals as are necessary to fulfill its Use of the Property. City, at its sole cost, shall comply with all laws, statutes, ordinances, rules, regulations and requirements of applicable governmental and quasi-governmental authorities (individually "Governmental Authority" and collectively "Governmental Authorities") now in force or which may be in force after the date of this Lease relating to the Property, or affecting the condition of the Property, or City's use or occupancy of the Property (collectively "Governmental Requirements"). City will not cause, maintain or permit any nuisance on, or at the Property. City will not permit any waste to occur at the Property.

7. Continuous Operation. Once City has begun operations at the Center, operations shall continue uninterrupted or abated.

8. Security Deposit. City shall not be required to deliver to UNM a security deposit ("Security Deposit") in conjunction with this Lease.

9. Condition of Property. City has had the opportunity to inspect and examine the Property, title to the Property and the zoning, access and other aspects and issues related to the Property prior to the execution of this Lease. By executing this Lease, City acknowledges that it accepts the "AS IS" condition of the Property. City acknowledges that no representation or warranty has been made to City by UNM and/or any other person as to the condition of the Property. By executing this Lease, City shall be deemed to have accepted the Property subject to all applicable municipal, county, state, federal and other laws, ordinances, rules, restrictions and regulations governing, regulating or applicable to the Property. By executing this Lease, City shall be deemed to have accepted the Property subject to, all easements, covenants, restrictions, development restrictions and requirements (if any), and other title matters affecting the Property. City acknowledges that UNM has not made any representation or warranty to City as to the present or future traffic counts, income, profitability, desirability, condition, compliance with laws, zoning, water, utilities, soil, access, size, marketability, value, future value, suitability and/or otherwise of the Property for any use, including the Use. City acknowledges that UNM has not made any representation or warranty to City as to current and/or future use, development and/or activity on other land owned by UNM in the vicinity of the Property. City accepts the topographic, drainage and soil conditions of the Property. City accepts the visibility, signage and access regarding the Property. City acknowledges that it has had an opportunity to review and investigate the environmental condition of the

Property. City accepts the Property subject to any and all environmental conditions above or below the surface of the Property. City waives all right to make any claim against UNM regarding any subsurface condition, including but not limited to issues related to soils, ground water, soil vapor and/or soil condition. ALL IMPLIED WARRANTIES, INCLUDING BUT NOT LIMITED TO ANY IMPLIED WARRANTY OF HABITABILITY, MERCHANTABILITY AND/OR FITNESS FOR A PARTICULAR PURPOSE ARE HEREBY DISCLAIMED.

10. Development. City shall develop the Property. City's development of the Property shall include, but is not limited to, the items set forth on Exhibit B. In addition, City, at City's expense, shall construct off-site road and drainage improvements set forth on Exhibit C, attached hereto and as updated by the parties from time to time (collectively "Off-Site Improvements"). As part of the development of the Property, City, at City's expense, shall develop and construct a building for a public senior center (the "Building") consistent with the Development Plan (as defined below). In addition to the Building, City, at City's expense, shall develop and construct all related improvements, including but not limited to signs, sidewalks, parking lots, driveways and landscaping at the Property and the Off-Site Improvements. The improvements (other than the Off-Site Improvements), including the Building are collectively referred to in this Lease as the "Improvements". The development of the Property and the construction of the Improvements and the Off-Site Improvements are collectively referred to in this Lease as the "Work". In conjunction with development of the Property, City must take action acceptable to UNM such that the Property will continue to accept all historic flows of surface water. In addition, City will take such action as is reasonably requested by UNM so that all surface waters at the Property will be retained or otherwise detained on the Property. City shall be responsible for all costs and expenses related to the Work, including but not limited to soft costs (including costs related to impact fees, planning, platting, developing and permitting), and hard costs (including construction costs).

11. Development Plan. City shall provide and deliver to UNM, for UNM's review and approval, a proposed development plan ("Development Plan") related to the Property. The Development Plan shall be in such form and detail as is reasonably required by UNM. No Work shall occur until UNM has approved the Development Plan in writing. The Development Plan shall include the following:

A. A site plan for the Property showing the proposed location of all improvements, including among other things all buildings, drives, signs, lighting, landscaping and other Improvements ("Site Plan").

B. Architectural design, architectural renderings and exterior elevations for the Improvements, including exterior finishes and colors ("Architectural Plan").

C. A utility plan establishing the location and capacity of utilities for the Property ("Utility Plan").

D. A transportation, traffic, access and parking plan ("Transportation Plan").

E. A drainage plan establishing: A. how all surface water generated at the Property shall be retained on the Property; and B. how historical surface water flows will be accommodated and transported across the Property ("Drainage Plan").

In conjunction with the Development Plan, City shall provide to UNM for UNM's review and approval the schedule to complete the Work prior to the Completion Date (as defined below) ("Schedule"). In conjunction with the Development Plan, City agrees to answer such questions, provide such information and make such modifications in the Development Plan as are reasonably requested by UNM.

12. City's Duties. City shall arrange, supervise, coordinate contract and pay for all development, planning, improvement, and construction at the Property in conjunction with the Work. The duties of City shall include, but are not limited to, the following:

A. Procure all necessary approvals, permits and licenses, including but not limited to building permits.

B. Negotiate, prepare and execute the contract with the general contractor ("General Contractor").

C. Supervise the contracts with General Contractor's subcontractors and suppliers.

D. Payment of all costs related to the Improvements.

13. Construction. City, at City's expense, as part of the Work, shall construct all of the Improvements, including the Building, at the Property. All of the Improvements shall be constructed consistent with the Development Plan. The Work shall be performed in a good and workmanlike manner and in a manner consistent with the requirements of this Lease and all Governmental Authorities. Only new and good quality materials shall be used in conjunction with the Work. Subject to force majeure, once the Work has been begun, it shall continue without interruption until Substantial Completion (as defined below) has occurred. Substantial Completion of the Work must occur in a prompt manner on or before December 31, 2021 ("Completion Date"). City shall promptly pay for the Work. All warranties related to the Work shall be in the name of and enforceable by both UNM and City.

14. Payment and Performance Bonds. When engaging construction contractors, the City shall ensure each contractor shall furnish UNM with payment and performance bonds ("Bonds") covering the Work. The Bonds shall be in a form, in an amount and from a surety reasonably acceptable to UNM. The City shall ensure payment and performance Bonds shall be provided by City to UNM prior to the start of any construction at the Property.

15. City's Construction Representations. City represents and warrants the following to UNM:

A. That City possesses sufficient authorized and available money to complete the Improvements and perform City's obligations under this Lease.

B. That City, along with its contractors, has sufficient experience and competence to complete the Improvements in a timely manner.

16. Changes. City shall not materially change the Work in a manner which is inconsistent with the Development Plan without UNM's prior written approval. Without limiting the foregoing, City shall not alter the size, shape or elevation of the Building without UNM's prior written approval.

17. Contractors' Contact Information. City shall provide a written Notice to UNM specifying for the General Contractor and each and every subcontractor and material supplier involved with the Work. The Notice shall specify contact information (including name of contact person, physical address, email address and cell phone number), and the scope of activity. City authorizes UNM to contact General Contractor and each such subcontractor and supplier. General Contractor and subcontractors performing any portion of the Work shall be licensed to perform the applicable portion of the Work. Prior to making any payment to General Contractor or any subcontractor or supplier, City shall obtain a full lien waiver from such party, in a recordable form acceptable to UNM. Upon UNM's request, City shall record any or all of the lien waivers obtained by City.

18. Completion of Construction. Substantial Completion (as defined below) of the Work shall occur on or before the Completion Date. Upon Substantial Completion of the Work, City, at its sole cost and expense, shall obtain all necessary permits, certificates, documents and approvals. Such requirements shall include, but are not limited to, procuring a final certificate of occupancy and all final inspections from Governmental Authorities. The term "Substantial Completion" means the completion of all of the Work, except minor items which will not interfere with City's complete and satisfactory use of the Building. City shall obtain a final, full lien waiver from General Contractor and each subcontractor and supplier involved with the Work. All lien waivers shall be in a recordable form acceptable to UNM.

19. As-Built Survey. Upon UNM's request, upon Substantial Completion of the Work, City shall obtain and deliver to UNM an "as-built" survey of the Property. The "as-built" survey shall be certified to both UNM and City and shall be an "ALTA" survey containing Table A Optional Items as are reasonably specified by UNM. Subject to appropriations by the City's Governing Body, City agrees to correct any problems identified by UNM following UNM's review of the "as built" survey.

20. UNM's Termination Right. Subject to force majeure, if City does not accomplish Substantial Completion of the Work on or before the Completion Date, it shall be an Event of Default.

21. Repairs, Maintenance, Replacements and Capital Improvements. After completion of the work, during the Term, City, at City's expense, shall be responsible for all repairs, maintenance, replacements, renovations, modifications, capital expenses and/or capital improvements at or in conjunction with the Improvements, including the Building, and/or the Property. All such repairs, maintenance, replacements, renovations, modifications, capital expenses and/or capital improvements shall be performed pursuant to all of the terms and provisions of this Lease. City shall keep the Property in good condition and repair, free from waste and deterioration at all times. City shall keep the Property, including all Improvements, in neat, clean and fully operating condition; free from dirt, rubbish, insects and pests. City shall store all trash, garbage and recyclables in appropriate receptacles. City shall be responsible for insuring that trash, garbage and recyclables are regularly and appropriately removed from the Property. UNM shall have no duty or obligation, and shall not incur any expense in conjunction with, repairs, maintenance, replacements, renovations, modifications, improvements, capital expenses and/or capital improvements at or in conjunction with the Property.

22. Alterations. After completion of the Work, City may make reasonable alterations, additions and/or improvements to the Property; provided, however, that all repairs, replacements, capital expenses and capital improvements to be undertaken by City at the Property in an amount of One Hundred Thousand ($100,000.00) Dollars or more are subject to the requirements set forth in this Lease regarding the Work, including UNM's right to review and approve such work. Notwithstanding the foregoing, all changes in the architectural design, exterior elevations, exterior colors, building footprint, building height, site plan and/or site layout, regardless of the cost of the change, is subject to the requirements set forth in this Lease regarding the Work, including UNM's right to review and approve the work. All such alterations by City shall be done at City's expense and in accordance with all Governmental Requirements.

23. Assignment and Subletting. City may not assign or sublease all or any portion of its interest pursuant to this Lease without the prior written consent of UNM. City may not assign all or any portion of its interest in the Property without the prior written consent of UNM. City may not sublet all or any portion of the Property without the prior written consent of UNM. In conjunction with any proposed assignment or subletting by City, UNM may withhold its consent in UNM's sole and absolute discretion, with or without reason.

24. Real Property Taxes. The parties acknowledge that the Property is currently exempt from Real Property Taxes (as defined below). If during the term real property taxes are imposed on the Property, City, at City's expense, shall timely pay all of the Real Property Taxes applicable to the Property and/or the Improvements. On or before ten (10) days prior to the date any payment of any of the Real Property Taxes is due, City shall provide proof of payment of such Real Property Taxes to UNM.

Notwithstanding the foregoing, City, in good faith, shall have the right to contest the Real Property Taxes, at City's expense. City agrees to keep UNM apprised of all contests filed by City regarding the Real Property Taxes. As used herein, the term "Real Property Taxes" shall include any form of real estate tax or assessment, general, special, ordinary or extraordinary, and any license fee, commercial rental tax, improvement bond or bonds (subject to the equitable special assessment allocation as set forth below), levy or tax (other than inheritance, personal income or estate taxes) imposed upon the Property by any authority having the direct or indirect power to tax, including any city, state or federal government, or any school, agricultural, sanitary, fire, street, drainage, or other improvement district thereof. The term "Real Property Taxes" shall also include any tax, fee, levy assessment or charge, or any increase therein, imposed by reason of events occurring, or changes in applicable law taking effect, during the Term, including, but not limited to, a change in the ownership of the Property, the execution of this Lease, or any modification, amendment or transfer thereof, and whether or not contemplated by the parties. For Real Property Taxes related to a partial tax year during the Term, the Real Property Taxes shall be prorated.

25. Fines and Penalties. After the date of this Lease, City shall be responsible for and shall pay all fines and penalties that are incurred by the City and/or that are related to the Property and/or the City's business at the Property.

26. Utilities. City shall be responsible for obtaining, metering and paying for all utilities and services supplied to the Property during the Term, including, but not limited to, water, sewer, electricity, telephone, security, cable television, internet, data communication and natural gas. Upon UNM's request, City will provide to UNM both copies of all utility bills and proof that all utility charges have been paid by City in full.

27. Parking. At all times, City shall have and maintain such parking at the Property as is required by the applicable building code, zoning code and other ordinances of the Governmental Authorities City, at City's expense, shall be responsible for operating, enforcing and regulating all parking at the Property.

28. City's Signs. City may install signs at the Property. Prior to installing any sign at the Property, however, City shall obtain UNM's prior written approval and consent regarding location and all other aspects of the proposed sign. All of City's signs at the Property must comply with all of UNM's requirements (as established from time to time) and all Governmental Requirements, if any. Upon UNM's request, at the end of the Term or earlier termination of this Lease, City, at City's expense, shall remove the City's signs as specified by UNM and repair all damage to the Property as a result of such sign removal.

29. Insurance. City, at City's expense, shall obtain and maintain the following insurance:

A. Builder's Risk Insurance. Until completion of construction of the Work, City or its General Contractor shall maintain or cause to be maintained builder's risk insurance covering the construction of the Work, in an amount not less than the

insurable value of the Work and materials supplied in connection with the Work. City shall furnish to UNM evidence of coverage and all renewals or replacements of this insurance. UNM shall be named as an additional insured under all builder's risk insurance policies.

B. Property Insurance. City, at City's sole expense, shall at all times obtain, pay for and maintain commercial property insurance covering all buildings, Improvements, tenant improvements, betterments, fixtures and alterations at the Property (including the Property) covering the perils insured under the ISO Special Causes of Loss Form (CP 10 30) ("Property Insurance"). The Property Insurance shall be in an amount equal to one hundred percent (100%) of the full insurable replacement cost of the Property, including the Improvements. City shall furnish to UNM evidence of coverage and all renewals or replacements of the Property Insurance. UNM shall be named an additional insured under the Property Insurance.

C. Contents Insurance. City, at City's sole expense, shall insure the contents, equipment and personal property kept by City at the Property. City agrees that UNM shall have no obligation whatsoever to insure any of City's personal property.

D. Liability Insurance. City, at City's expense, shall obtain and keep in force a Commercial General Liability policy of insurance covering City and City's operations and activities at the Property (including the Property) against claims and losses for bodily injury, personal injury, and property damage based upon or arising out of the ownership, use, occupancy or maintenance of the Property, and all appurtenant areas ("Liability Insurance"). The Liability Insurance shall have coverage limits acceptable to UNM, as reasonably adjusted from time to time. Initially, the Liability Insurance shall contain combined single limit coverage in an amount which is not less than $3,000,000 per occurrence. The Liability Insurance shall be on an "occurrence basis", not a "claims made" basis. The Liability Insurance shall include Contractual Liability Insurance coverage. The Liability Insurance shall contain a severability of interest clause. UNM shall be named as an additional insured under all of City's liability insurance policies related to the Property. The policy shall not contain any intra-insured exclusion as between insured persons or organizations but shall include coverage for liability assumed under this Lease as an "insured contract" for the performance of City's indemnity obligations under this Lease. The limits of the Liability Insurance shall not, however, limit the liability of City nor relieve City of any obligation under this Lease. City shall deliver to UNM an endorsement to the Liability Insurance which provides that City's insurance shall be primary to and not contributory with any similar insurance carried by UNM, whose insurance shall be considered excess insurance only.

E. Worker's Compensation. City shall obtain and pay for Worker's Compensation insurance policy in accordance with the law of the State of New Mexico. The Worker's Compensation insurance policy shall provide coverage in an amount which is not less than the amount required by applicable New Mexico law.

F. Notice to UNM and Insurance Companies. All insurance policies shall provide for at least thirty (30) days prior written notice to UNM before cancellation.

Insurance obtained in conjunction with this Lease shall be from companies maintaining during the policy term a general policyholders rating of at least A-VII, as set forth in the most current issue of Best's Insurance Guide.

G. Certificates. Prior to the Lease Commencement Date, City shall deliver to UNM the certificate of insurance evidencing all liability insurance required pursuant to this Lease. Prior to the commencement of construction of any Improvement, City shall deliver to UNM the certificates of the insurance evidencing all of the other insurance required by this Lease. Each certificate shall provide that the insurer will not cancel the policy without giving UNM at least fifteen (15) days prior written notice. At least ten (10) days prior to the expiration of each such insurance policy, City shall deliver to UNM a copy of a renewal policy or binder which shall comply with the foregoing provisions with respect to prior notice of cancellation thereof being given by the insurance company to UNM.

H. Deductibles and Premiums. All deductibles under City's insurance policies shall be in commercially reasonable amounts (not to exceed in the aggregate $10,000.00). All premiums and charges for all insurance policies shall be paid by City when due. If City fails to timely pay any premium or charge, UNM may, but shall not be obligated to, make such payment (or obtain an alternate policy), and the amount of any premium or charge paid by UNM shall be repaid by City promptly on UNM's demand.

30. Liability. No Party to this Agreement shall be responsible for the liability incurred as a result of the other Party's acts or omissions in connection with this Agreement or in performance under this Agreement. Any liability incurred in connection with this Agreement or the acts or omissions of a Party performing under the Agreement is specifically subject to the immunities and limitations of the New Mexico Tort Claims Act, NMSA 1978 §§ 41-4-1 through 41-4-30 (as amended).

31. Subrogation. To the extent that City's insurance is not invalidated, City releases UNM, and waives City's entire right of recovery against UNM for loss or damage arising out of or incident to the perils to be insured against under this Lease, which perils appear in, on or about the Property and/or the Building. City shall be responsible for giving notice to City's insurance carrier or carriers involved that the foregoing waiver of subrogation is contained in this Lease. Notwithstanding any other provision of this Lease, UNM and/or the State of New Mexico Risk Management Division shall retain all subrogation rights against City in the event of a loss which is the responsibility of or caused by City or City's agents, employees, contractors, guests, customers, visitors, licensees and/or invitees. This Section 31 shall at all times be subject to the immunities and limitations stated in Section 30, Liability.

32. Security. City shall be responsible for all security related to the Property and activities at the Property.

33. Hazardous Substances. The term "Hazardous Substance" as used in this Lease shall mean any product, substance, chemical, material or waste whose presence, nature, quantity and/or intensity of existence, use, manufacture, disposal, transportation,

spill, release or effect, either by itself or in combination with other materials expected to be at the Property, is either (i) potentially injurious to the public health, safety or welfare, the environment, or the Property; (ii) regulated or monitored by any governmental or quasi-governmental authority; or (iii) a basis for potential liability to any governmental or quasi-governmental authority or third party under any applicable ordinance, statute, rule, regulation or common law theory. Hazardous Substance shall include, but not be limited to, solvents, hydrocarbons, petroleum, gasoline, crude oil or any products or by-products thereof. City shall not engage in any activity in or about the Property which constitutes a Reportable Use (as hereinafter defined) of Hazardous Substances without the express prior written consent of UNM and compliance in a timely manner (at City's sole cost and expense) with all applicable requirements. "Reportable Use" shall mean: (i) the installation or use by City of any above or below ground storage tank; (ii) the generation, possession, storage, use, transportation, or disposal of a Hazardous Substance by City that requires a permit from, or with respect to which a report, notice, registration or business plan is required to be filed with, any governmental authority; and (iii) the presence in, on or about the Property of a Hazardous Substance occurring on or after the Delivery Date and known to City with respect to which any applicable laws require that a notice be given to persons entering or occupying the Property or neighboring properties. Notwithstanding the foregoing, City may, without UNM's prior consent, but upon notice to UNM and in compliance with all applicable requirements, use any ordinary and customary materials reasonably required to be used by City in the normal course of the permitted use pursuant to this Lease, so long as such use is not a Reportable Use and does not expose the Property or neighboring properties to any meaningful risk of contamination or damage or expose UNM to any liability therefor. In addition, UNM may (but without any obligation to do so) condition its consent to any Reportable Use of any Hazardous Substance by City upon City giving UNM such additional assurances as UNM, in its reasonable discretion, deems necessary to protect itself, the public, the Property and the environment against damage, contamination or injury and/or liability therefor.

34. Condemnation. If all of the Property is permanently condemned, this Lease shall terminate on the date of the taking. If a portion of the Property is permanently condemned, this Lease shall terminate as to the portion of the Property condemned upon the date of the taking. If a portion of the Property is condemned and the condemnation renders the remaining portion of the Property unsuitable for City's Use (as determined in good faith by City), City may terminate this Lease upon ninety (90) days' Notice to UNM. If a permanent condemnation of a portion the Property occurs which does not render the Property unsuitable for City Use, this Lease shall continue in full force and effect without any modification (other than the description of the Property). All condemnation proceeds received by City in conjunction with a condemnation of part of the Property which does not result in termination of this Lease shall be used by City to restore the Property to at least as good a condition as existed prior to the condemnation. City shall be responsible for and shall expend all monies in addition to condemnation proceeds necessary to restore the Property following a condemnation. If all or part of the Property is temporarily condemned, this Lease shall continue in full force and effect. In any condemnation proceeding, City shall be entitled to a condemnation award only for City's leasehold estate. All other condemnation awards shall be paid to and belong solely to UNM,

including but not limited to condemnation proceeds based on UNM's ownership of the Property, lessor's interest pursuant to this Lease and the residual value of the Improvements.

35. Damage or Destruction. If any part of the Property is damaged, the property insurance proceeds shall be delivered to City and used by City to promptly restore the Property to at least as good a condition as existed prior to the casualty. Rent shall not be abated. This Lease shall continue in full force and effect.

36. Estoppel Certificates. Upon the request of UNM or City, at any time, and from time to time, UNM and City will execute and deliver to the other, within thirty (30) days after such request, a written estoppel certificate, duly executed in a form reasonably requested by the other party. Upon the request of UNM, City shall obtain an Estoppel Certificate from every subtenant or occupant at the Property, within thirty (30) days after such request, covering such matters and in a form reasonably requested by UNM.

37. City's Default. The occurrence and continuation without cure for thirty (30) days after Notice from UNM to City of any of the following events (individually "Event of Default") shall constitute a default by City under this Lease:

A. The failure by City to pay any money or other amount due under this Lease in full when due.

B. The failure by City to timely perform any other duty or obligation contained in this Lease; provided, however, that if the default is such that it cannot be cured by City within thirty (30) days, UNM will not pursue any right or remedies so long as City initiates cure within the thirty (30) day period, diligently pursues completion of the cure without material interruption or delay and the cure is completed, in any event, within ninety (90) days.

C. Any material representation or warranty by City to UNM is or becomes false or untrue.

D. A bankruptcy, reorganization dissolution, termination is filed by or against City.

E. A receiver is appointed for City.

F. UNM in good faith deems itself insecure.

A notice pursuant to this paragraph shall constitute a notice under the New Mexico Forcible Entry and Detainer Statute. A notice under the New Mexico Forcible Entry and Detainer Statute shall constitute a notice of default for purposes of this Lease.

38. UNM's Remedies.

A. Upon the occurrence of any one or more Events of Default and continuation thereof beyond the applicable cure or grace period, without further notice or demand, and without limiting UNM from the exercise of any right or remedy which UNM may have by reason of such default, UNM, in UNM's discretion, may do all or any of the following:

(i) Terminate this Lease.

(ii) Terminate City's right to possession of the Property. In such event, City agrees to immediately surrender possession of the Property to UNM.

(iii) Recover from City all damages incurred by UNM by reason of City's default.

(iv) Maintain City's right to possession, in which case this Lease shall continue in effect, whether or not City shall have abandoned or surrendered, or attempted to abandon or surrender, the Property.

(v) Accelerate all amounts to be due from City to UNM pursuant to this Lease.

(vi) Initiate legal proceedings, as deemed appropriate by UNM.

(vii) Cure the default and collect from City the cost of such cure.

(viii) Pursue any other remedy now or hereafter available to UNM at law, in equity, pursuant to this Lease or otherwise.

Except when otherwise agreed to in writing by UNM, City shall remain liable to UNM following any surrender or attempted surrender of the Property. UNM can re-enter the Property without such action constituting a surrender of the Property or a termination of this Lease. The initiation of legal proceedings, by UNM against City including, but not limited to, a forcible entry and detainer action, shall not be deemed to terminate this Lease.

B. In addition to other remedies, if this Lease shall terminate for any reason whatsoever, UNM or UNM's agents and employees, without further notice, immediately or at any time thereafter, may enter upon and/or reenter the Property and possess or repossess it either by summary process proceedings, ejectment or by any suitable action or proceeding at law or by agreement, or by force or otherwise, and may dispossess and remove City and all other persons and property from the Property without being liable to City. The words "enter" or "reenter", "possess" or "repossess" as used herein; are not restricted to their technical legal meaning.

C. In the event of any breach or threatened breach by City of any agreement, term, covenant or condition contained in this Lease, UNM shall be entitled to enjoin such breach or threatened breach though reentry, summary proceedings, and/or other remedy.

D. All obligations and agreements to be performed by City as provided in this Lease will be performed by City at the sole cost of City. Even so, if City fails to pay any money required to be paid by City or fails to perform any act on the part of City required by this Lease, and the failure continues for thirty (30) days after Notice by UNM (and any default Notice shall be deemed to be Notice pursuant to this paragraph) UNM may, but will not be obligated to, without waiving or releasing City from any obligation of City, make the payment or perform the act on behalf of City. In such event, City shall remain liable for all such obligations.

E. All rights and remedies of UNM in this Lease shall be cumulative. The exercise by UNM of any one or more of the rights or remedies provided shall not preclude the simultaneous or later exercise by UNM of any or all other rights or remedies provided for in this Lease. The doctrine of "election of remedies" shall not apply to this Lease.

39. UNM's Default. In the event UNM defaults under this Lease, after thirty (30) days written Notice from City to UNM and UNM's failure to cure the default in such period, City shall have all rights and remedies available at law, in equity, pursuant to this Lease or otherwise. Notwithstanding the foregoing, if the default is such that it cannot be reasonably cured by UNM within thirty (30) days, City agrees it will not pursue any right or remedies so long as UNM initiates cure within the thirty (30) day period and diligently pursues completion of the cure without material interruption or delay. In no event shall UNM be liable to City for special damages, consequential damages, lost profits and/or punitive damages.

40. Waiver of Jury Trial. The parties to this Lease waive all right to a trial by a jury.

41. Recording. This Lease shall not be recorded. A memorandum of lease, in a form mutually acceptable to UNM and City, shall be executed and recorded by UNM and City upon the request of either party.

42. Time is of the Essence. Time is of the essence regarding this Lease and the performance by City of its obligations (including but not limited to payment of Rent) pursuant to this Lease.

43. No Offset. No offset or claim that City may have now or in the future against UNM shall relieve City from performing any of its obligations under this Lease, including but not limited to the payment of Rent.

44. Interest. Upon the occurrence of Event of Default, all amounts owed by City to UNM and not paid when due pursuant to this Lease shall accrue interest from the date of the default at the rate of ten (10%) percent.

45. Governing Law. This Lease shall be construed by and governed in accordance with the law of the State of New Mexico.

46. Subordination and Attornment. This Lease and all of the rights of City are and will in the future be subject to and subordinate to any and all liens of all mortgages, deeds of trust and security agreements, regardless of the amount of such liens, now existing and/or placed by UNM on the Property, or any part of the Property, after the date of this Lease. Such subordination extends to and includes all renewals, modifications, consolidations, replacements, extensions and/or substitutions of such liens. City agrees to execute within ten (10) days after request any and all additional documents requested by UNM to further evidence the above subordination. If the holder of any mortgage succeeds to the rights of UNM under this Lease, whether through foreclosure, trustee's sale or otherwise, City, upon the request of such person (or its successors and assigns), will attorn to and recognize such person as City's UNM under this Lease. No successor of UNM shall be responsible for any obligation of UNM which arose prior to the date title to the Property is acquired by the successor to UNM. In such event, City will execute and deliver all instruments that the successor UNM may reasonably request to further document such attornment. Upon such attornment, this Lease will continue in full force and effect as a direct lease between the successor UNM and City pursuant to the terms and provisions contained in this Lease. In such event, UNM shall be released from all further liability and obligation pursuant to this Lease.

47. Sale of the Property by UNM. If before the end of this Lease the Property is sold, traded, gifted, transferred or otherwise conveyed, the new owner of the Property will be deemed, without further agreement, to have assumed and agreed to carry out any and all of the obligations of UNM in this Lease. In conjunction with any such event, UNM shall be automatically released from all liability and obligation to City pursuant to this Lease arising or based on events occurring after the date of the conveyance.

48. Exculpation. The obligations of UNM under this Lease do not constitute personal obligations of UNM, and City shall look solely to UNM's interest in the Property and to no other assets of UNM for satisfaction of any liability of UNM to City arising under the terms of this Lease. City agrees to not seek recourse personally against UNM and/or any employee, agent or contractor of UNM, nor seek recovery from or against any of UNM's assets other than the Property for claims arising out of UNM's breach of this Lease.

49. Brokerage Commissions. UNM and City advise each other that they have no dealings with any broker or agent, and that no person or entity has any claim for a fee or commission in conjunction with this Lease. Each party shall be responsible for the other party regarding any and all costs, claims and liabilities arising from the foregoing.

50. Absolute Net Lease. The parties intend for this Lease to be an absolute, "net lease." Therefore, absolutely all costs and expenses related to the Property shall be paid by City. It is understood by City that UNM shall not pay any costs, expenses, fees or other charges related to the Property and/or in conjunction with this Lease.

51. Quiet Possession. Provided that no Event of Default has occurred and is continuing beyond any applicable grace or cure period, City shall have quiet possession of the Property during the Term, subject to the provisions of this Lease.

52. Return of Property. At the end of the Term or earlier termination of this Lease, City will deliver to UNM the Property, including the Building and the other Improvements, in good repair and condition, except for reasonable wear and tear. At that time, all such property and improvements will become the property of UNM. City agrees that it has no interest in the land comprising the Property other than that of a lessee pursuant to this Lease. At the end of the Term or earlier termination of this Lease, City shall execute in favor of UNM and deliver to UNM a Quitclaim Deed, in recordable form, covering the Property, including the Building and the other Improvements. The Quitclaim Deed shall be in a form, scope and content reasonably acceptable to UNM. Notwithstanding the foregoing, no later than six (6) months after either the end of the Term or the earlier termination of this Lease, UNM may give Notice to City that all or a specified portion, as determined by UNM in its sole discretion, of the Improvements at the Property must be removed by City. The removal of Improvements by City pursuant to this section shall be at City's expense. The specified Improvements shall be removed by City as soon as reasonably possible and, in any event within four (4) months after the Notice from UNM.

53. No Subordination. At no time will UNM subordinate any interest held by City in the Property to the lien of any lender of City.

54. Holding Over. No holding over by City after the end of the Term or the earlier termination of this Lease, whether with or without the consent of UNM, will operate to extend or renew this Lease. Any holdover will be construed as a tenancy from month to month (not a tenancy from year to year) and the Rent, on an annual basis, shall be increased to market rent, but such Rent shall be paid in equal monthly installments. Notwithstanding the foregoing, any reasonable delay in removing the Improvements shall not be deemed a holding over by City.

55. No City Transfer During Lease Term. During the Term of this Lease, the City cannot sell, assign, trade, gift "master lease", transfer or otherwise convey (collectively "Transfer") all or any portion of the Property, including all or any portion of the Improvements, and/or City's interest pursuant to this Lease without UNM's prior written consent, which UNM can withhold in its sole and absolute discretion, with or without reason.

56. UNM Purchase Option. Upon not less than nine (9) months' notice from UNM to City, given at any time after the first twenty (20) years of the Term, UNM may

purchase City's interest pursuant to this Lease, including all of the improvements, for the fair market value of City's leasehold interest in the land pursuant to this Lease, plus the fair market value of the Improvements. Fair market value for purposes of UNM's option to purchase ("Option") shall be established by an appraisal. UNM shall obtain an appraisal, at UNM's expense, within sixty (60) days of UNM's Notice exercising the Option. The appraisal shall be subjected to the New Mexico Taxation and Revenue Department for its review and approval. If the New Mexico Taxation and Revenue Department approves the appraisal obtained UNM, the appraisal shall establish the purchase price. If the New Mexico Taxation and Revenue Department rejects the appraisal, UNM shall obtain one (or more, if necessary) appraisals, at UNM's expense, with each appraisal being subject to review and approval by the New Mexico Taxation and Revenue Department. The purchase price for the Option shall be established by the appraisal approved by the New Mexico Taxation and Revenue Department once the purchase price for the Option has been established, closing shall occur within one (1) year, but in any event within thirty (30) days UNM's obtaining all necessary approvals of the transaction. In conjunction with the Closing, City and UNM shall enter into such documents, including but not limited to a purchase agreement, as are reasonably requested by UNM in conjunction with the transaction. The closing documents shall be in a form acceptable to City and UNM

57. UNM's Right of First Refusal. Notwithstanding the restrictions in this Lease on City's right to sell, assign, sublet, transfer or otherwise convey all or any portion of its interest pursuant to this Lease and/or the Property, and in addition to UNM's right to withhold consent, UNM shall have a right of first refusal to purchase the Improvements and/or City's interest pursuant to this Lease on the same terms and conditions as being offered by a bona fide third party buyer. Prior to entering into a purchase agreement, City shall first offer such property to UNM on the same terms and conditions as are being proposed by such bona fide third party buyer ("RFR"). City shall give Notice to UNM of the Offer by sending UNM a copy of the proposed purchase and sale agreement as well as all related and supporting documents. UNM shall have thirty (30) days from receipt of the Notice to exercise the RFR. A failure to exercise the RFR by sending a Notice to City shall be deemed a rejection. If UNM exercises the RFR, notwithstanding the terms of the proposed sale, UNM shall have one (1) year in which to obtain all necessary approvals of the transaction. The Closing shall occur within thirty (30) days after UNM has obtained all necessary approvals of the transaction. City will enter into such documents, including but not limited to a purchase agreement as are required by UNM in conjunction with the RFR.

58. Request Compliance. Unless otherwise specified in this Lease, City shall comply with any request by UNM on or before the date which is ten (10) days after Notice of such request has been given by UNM to City.

59. Property Inspection. Upon ten (10) days' Notice from UNM to City, UNM may inspect the Property, from time to time.

60. Amendment. No change, amendment, modification, revision, cancellation or discharge of this Lease shall be valid unless it is in writing and signed by the parties to this Lease. This Lease shall not be amended by any action, inaction, "course of dealing" or other similar event.

61. Waiver. No waiver or failure by UNM to enforce any breach of any provision by City shall be construed to be a waiver of any subsequent breach by City, regardless of the time, nature or form of the subsequent breach.

62. Limitation of Indemnifications. To the extent applicable, if at all, the indemnifications by City contained in this Lease are limited by and subject to the provisions of NMSA 1978 § 56-7-1 (as amended).

63. Indemnification Survival. All indemnifications by City to UNM shall survive the exercise of any right or remedy by UNM. Without limiting the foregoing, City agrees that all indemnifications in this Lease by City in favor of UNM shall survive termination and/or expiration of this Lease This Section 63 shall at all times be subject to the limitations described in Section 62, Limitation of Indemnification.

64. Notice. Any notice under this Lease ("Notice") shall be in writing and may be either hand delivered, sent by recognized overnight courier for next business day delivery or mailed, postage prepaid, certified mail, return receipt requested, addressed to the parties as follows:

UNM:

Chancellor for Health Sciences
MSC09 5300
1 University of New Mexico
Albuquerque, NM 87131-5001
Telephone: (505) 272-5849

With a copy to:

Executive Director
Health Sciences Rio Rancho Campus
UNM Health Sciences
3001 Broadmoor Boulevard NE
Rio Rancho, NM 87144
Telephone: (505) 994-7430
E-mail: jsilva@srmc.unm.edu

and

HSC Office of University Counsel
Attn: Deputy University Counsel for Health Sciences
University of New Mexico
Street Address: 1001 Stanford Dr NE, Ste 3010
Albuquerque, NM 87131
Mailing Address: MSC09 5300, 1 University of New Mexico
Albuquerque, NM 87131-0001

Telephone:	(505) 272-2377
E-mail:	counsel@unm.edu

and

	Director of Real Estate University of New Mexico
Street Address:	2811 Campus Boulevard NE Albuquerque, NM 87106
Mailing Address:	MSC 06 3595, 1 University of New Mexico Albuquerque, NM 87131-0001
Telephone:	(505) 277-4620
E-mail:	tneale@unm.edu

CITY:	CITY OF RIO RANCHO City Manager

and

	City Attorney
Street Address:	3200 Civic Center Circle Rio Rancho, New Mexico
Email:	glauer@rrnm.gov pwells@rrnm.gov dcampbell@rrnm.gov

If any Notice is hand-delivered, it shall be deemed given upon delivery. If any Notice is sent by recognized overnight courier, it shall be deemed given upon delivery by the courier. If any Notice is mailed, it shall be deemed given three business days after deposit in the United States mail. A party may change its address for Notices by sending a Notice to the other party pursuant to the provisions of this paragraph.

65. Captions. The headings or captions used in this Lease are for convenience and reference only, and in no way define, limit or describe the scope or intent of this Lease or any part, section, paragraph or subparagraph thereof.

66. Severability. If any provision of this Lease is found by a court to be unenforceable, invalid or contrary to law, such finding shall not invalidate or otherwise affect the enforceability of the remaining provisions of this Lease.

67. Successors and Assigns. Each term of this Lease shall extend to and bind all successors, assigns, heirs, devisees, legal representatives, personal representatives and trustees of the parties hereto.

68. Additional Documents. Parties to this Lease agree to execute such other and further documents as are reasonably necessary to carry out the transactions covered by and/or related to this Lease.

69. Status. At all times, City shall be a New Mexico non-profit corporation duly formed, validly existing and in good standing under the laws of the State of New Mexico and in compliance with all non-profit corporation requirements of the U.S. Internal Revenue Service.

70. Authority. By signing this Lease, City represents and warrants to UNM:

A. that it has full legal power, authority and right to execute, deliver and perform the obligations under this Lease.

B. that the transactions contemplated by this Lease and each person signing, this Lease has been duly authorized by all requisite action.

C. that no remaining action or third-party consent is required in conjunction with this Lease.

71. No Joint Venture or Partnership. UNM and City intend that the relationship created by this Lease be solely that of lessor and lessee. Nothing in this Lease is intended to create a joint venture, partnership, or other relationship (except lessee and lessor).

72. City Obligations Subject to Appropriation. City's obligations under this Lease are contingent upon appropriations being made therefor by City's Governing Body sufficient to fulfill such obligations. If such appropriations are insufficient to satisfy City's said obligations, City shall promptly notify UNM, and this Lease shall terminate forthwith. In the event of such termination, each party shall remain liable for all obligations accrued to the date of such termination.

73. Attorney Review. UNM and City each acknowledge and agree that this Lease is a legally binding document and that each party has had a full opportunity to have its respective attorney review, revise and negotiate this Lease. Consequently, neither party shall be deemed to have had the responsibility of drafting this Lease if this Lease at any time is construed or interpreted.

This Lease is hereby executed and delivered.

UNM:

THE REGENTS OF THE UNIVERSITY OF NEW MEXICO, a constitutionally created educational institution of the State of New Mexico

By: _____
Print Name: Teresa Costantinidis
Its: Senior Vice President for Finance and Administration

CITY:

THE CITY OF RIO RANCHO, a political subdivision of the State of New Mexico

By:_____
Print Name: DAVID S. CAMPBELL
Its: CITY MANAGER

REVIEWED AND APPROVED FOR UNM BY:

UNIVERSITY OF NEW MEXICO

By:_____
THOMAS M. NEALE, Director of Real Estate

APPROVED AS TO FORM FOR UNM:

HSC Office of University Counsel

By:_____
SCOT SAUDER, Deputy University Counsel

APPROVED AS TO FORM FOR CITY:

By: _____
GREGORY F. LAUER, CITY ATTORNEY

EXHIBIT LIST

EXHIBIT A ~ Legal Description
EXHIBIT B ~ Conceptual Plan
EXHIBIT C ~ Off-Site Improvements

EXHIBIT SHOWING LEASE AREA WITHIN TRACT 3, U.N.M. CAMPUS CENTER CITY OF RIO RANCHO, SANDOVAL COUNTY, NEW MEXICO DECEMBER 2019

A CERTAIN TRACT OF LAND BEING A LEASE AREA LOCATED WITHIN THE SOUTHEASTERLY PORTION OF TRACT NUMBERED THREE (3) OF THE SUMMARY PLAT OF TRACTS 1, 2 AND 3, U.N.M. CAMPUS CENTER, RIO RANCHO, SANDOVAL COUNTY, NEW MEXICO, AS THE SAME IS SHOWN AND DESIGNATED ON THE PLAT THEREOF, FILED IN THE OFFICE OF THE COUNTY CLERK OF SANDOVAL COUNTY, NEW MEXICO ON JUNE 17, 2010 IN RIO RANCHO PLAT BOOK NO. 23, PAGE 69, SAID LEASE AREA BEING MORE PARTICULARLY DESCRIBED AS FOLLOWS: BEGINNING AT THE SOUTHEAST CORNER OF THE HEREIN DESCRIBED LEASE AREA, BEING A POINT ON THE WESTERLY LINE OF BROADMOOR BOULEVARD, WHENCE THE SOUTHEAST CORNER OF SAID TRACT 3 BEARS S. 02 DEG. 40' 13" E., A DISTANCE OF 984.02 FEET RUNNING THENCE N. 89 DEG. 59' 44" W., A DISTANCE OF 550.00 FEET TO THE SOUTHWEST CORNER; THENCE N. 00 DEG. 25' 02" E., A DISTANCE OF 305.00 FEET TO THE NORTHWEST CORNER, BEING A POINT ON THE SOUTHERLY LINE OF NO NAME ROAD; THENCE S. 89 DEG. 59' 44" E., ALONG THE SOUTHERLY LINE OF NO NAME ROAD, A DISTANCE OF 550.00 FEET TO THE NORTHEAST CORNER, BEING THE INTERSECTION OF THE SOUTHERLY LINE OF NO NAME ROAD WITH THE WESTERLY LINE OF BROADMOOR BOULEVARD; THENCE S. 00 DEG. 25' 02" W., ALONG THE WESTERLY LINE OF BROADMOOR BOULEVARD, A DISTANCE OF 305.00 FEET TO THE SOUTHEAST CORNER AND PLACE OF BEGINNING CONTAINING 3.8509 ACRES MORE OR LESS.

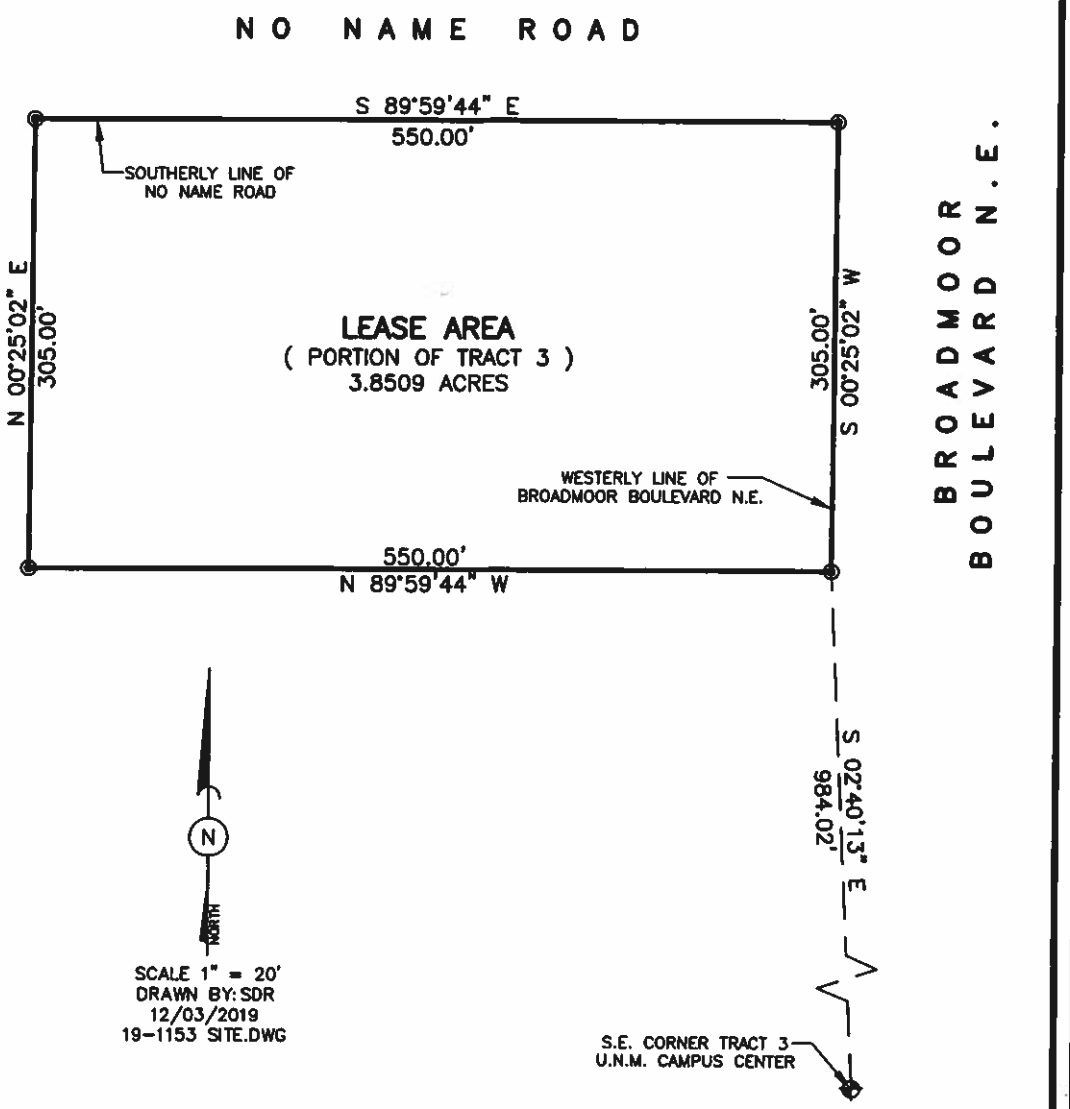

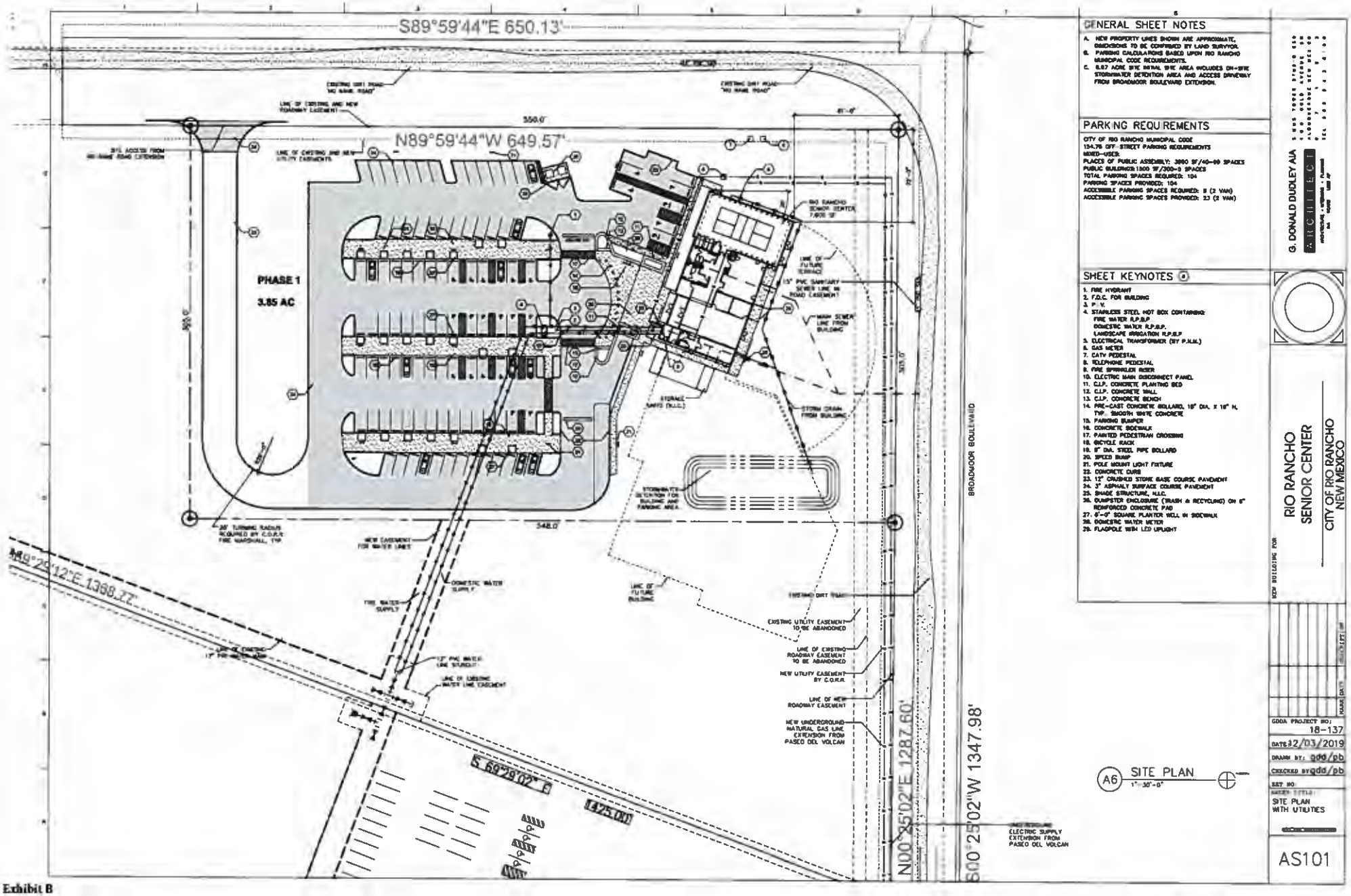
S89°59'44"E 650.13'
N89°59'44"W 649.57'
PHASE 1
3.85 AC
BROADMOOR BOULEVARD
N00°25'02"E 1287.60'
S00°25'02"W 1347.98'
S 69°28'02" E
1425.00'
N49°29'12"E 1388.22'
GENERAL SHEET NOTES
PARKING REQUIREMENTS
SHEET KEYNOTES
SITE PLAN
A6
SITE PLAN
WITH UTILITIES
AS101
RIO RANCHO
SENIOR CENTER
CITY OF RIO RANCHO
NEW MEXICO
G. DONALD DUDLEY AIA
ARCHITECT
GDDA PROJECT NO: 18-137
DATE: 12/03/2019
DRAWN BY: gdd/pb
CHECKED BY: gdd/pb

Exhibit B

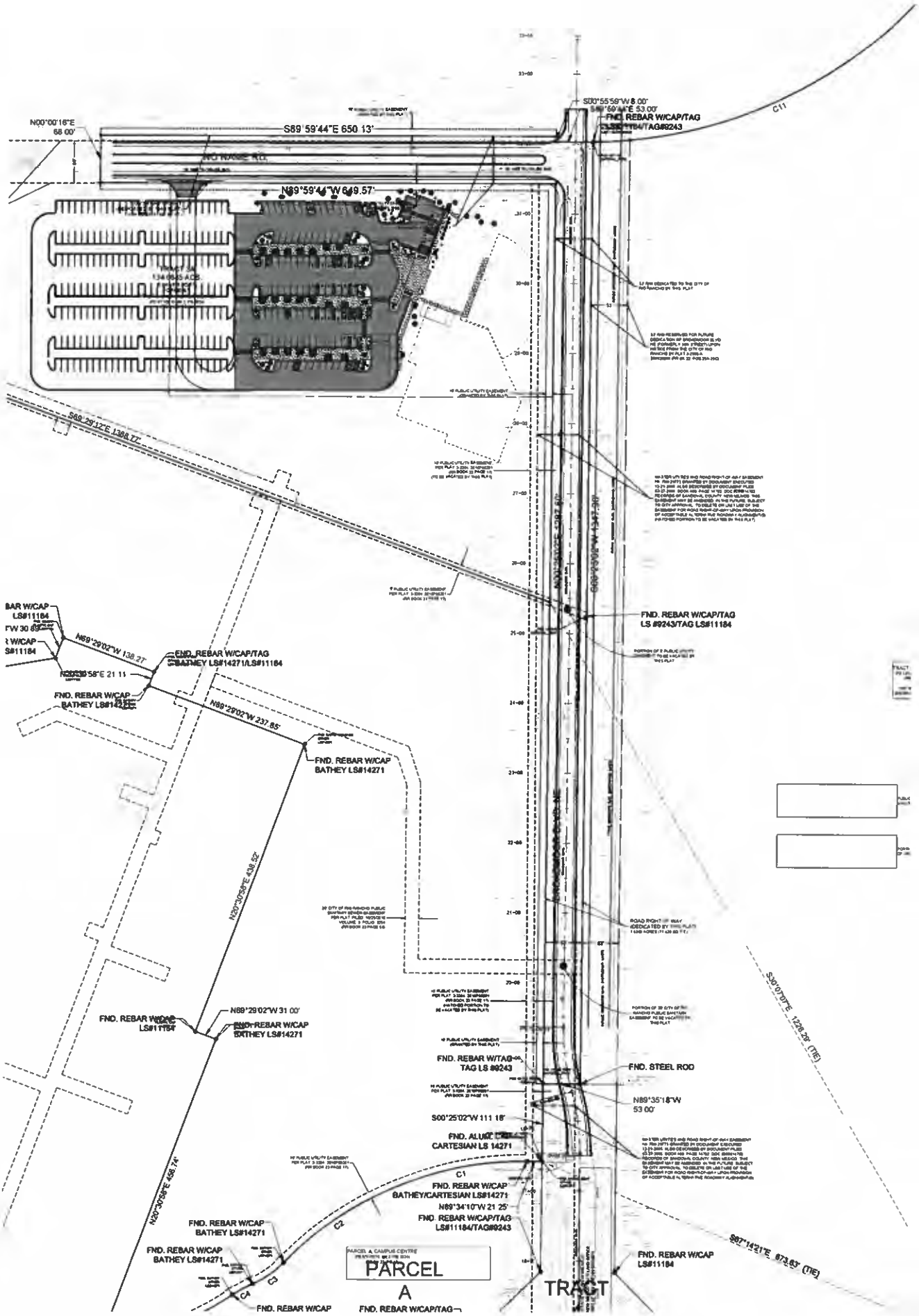
S00°55'59"W 8.00'
S89°59'44"E 53.00'
FND. REBAR W/CAP/TAG
LS#11184/TAG#9243
C11
N00°00'16"E
68.00'
S89°59'44"E 650.13'
N89°59'44"W 649.57'
S89°29'12"E 1368.72'
FND. REBAR W/CAP/TAG
LS #9243/TAG LS#11184
N89°29'02"W 138.27'
FND. REBAR W/CAP/TAG
BATHEY LS#14271/LS#11184
FND. REBAR W/CAP
BATHEY LS#14271
N89°29'02"W 237.85'
FND. REBAR W/CAP
BATHEY LS#14271
N20°30'58"E 436.52'
N89°29'02"W 31.00'
FND. REBAR W/CAP
BATHEY LS#14271
FND. REBAR W/TAG
TAG LS #9243
FND. STEEL ROD
N89°35'18"W
53.00'
S00°25'02"W 111.18'
FND. ALUM. CAP
CARTESIAN LS 14271
C1
FND. REBAR W/CAP
BATHEY/CARTESIAN LS#14271
N89°34'10"W 21.25'
FND. REBAR W/CAP/TAG
LS#11184/TAG#9243
N20°30'58"E 466.74'
C2
FND. REBAR W/CAP
BATHEY LS#14271
FND. REBAR W/CAP
BATHEY LS#14271
C3
C4
FND. REBAR W/CAP
PARCEL
A
FND. REBAR W/CAP/TAG
TRACT
FND. REBAR W/CAP
LS#11184
S00°07'07"E 1228.28' (TIE)
S87°14'21"E 873.63' (TIE)

Exhibit C

Appendix F

Preliminary Cost Estimates

Broadmoor Boulevard Project
Rio Rancho, NM
Conceptual Estimate
CoRR Project No. PW1914
Project No. 1910003700

ENGINEERS ESTIMATE

SPEC	NMDOT ITEM NO.	ITEM DESCRIPTION	UNIT	QTY	PRICE	AMOUNT
		ROADWAY				
NMDOT	201000	CLEARING AND GRUBBING	LS	1	$10,000.00	$10,000.00
NMDOT	203000	UNCLASSIFIED EXCAVATION	CY	1,000	$15.00	$15,000.00
NMDOT	203100	BORROW	CY	2,000	$20.00	$40,000.00
NMDOT	207000	SUBGRADE PREPARATION	SY	15,900	$2.25	$35,775.00
NMDOT	303000	BASE COURSE, 4"	SY	8,700	$7.00	$60,900.00
NMDOT	407000	ASPHALT MATERIAL FOR TACK COAT	TON	4	$800.00	$3,200.00
NMDOT	408100	PRIME COAT MATERIAL	TON	17	$850.00	$14,450.00
NMDOT	423250	HMA SP-III COMPLETE	TON	7,800	$25.00	$195,000.00
NMDOT	608004	CONCRETE SIDEWALK, 4"	SY	3,200	$60.00	$192,000.00
NMDOT	609424	CONCRETE VERTICAL CURB AND GUTTER TYPE B 6" X 24"	LF	5,000	$22.00	$110,000.00
NMDOT	632000	CLASS A SEEDING	ACRE	0.5	$5,000.00	$2,500.00
NMDOT	701000	PANEL SIGNS	SF	250	$22.00	$5,500.00
NMDOT	701100	STEEL/BASE POST FOR ALUMINUM PANEL SIGNS	LF	225	$10.00	$2,250.00
NMDOT	702238	BARRICADE TYPE III 8"	EACH	4	$500.00	$2,000.00
NMDOT	704700	HOT THERMOPLASTIC PAVEMENT MARKINGS 4"	LF	11,800	$1.75	$20,650.00
NMDOT	704701	HOT THERMOPLASTIC PAVEMENT MARKINGS 6"	LF	200	$4.00	$800.00
NMDOT	704717	HOT THERMOPLASTIC PAVEMENT MARKING RIGHT ARROW	EACH	2	$200.00	$400.00
NMDOT	704720	HOT THERMOPLASTIC PAVEMENT MARKING WORD (ONLY)	EACH	2	$200.00	$400.00
NMDOT	706350	POWER SERVICE INSTALLATION	LS	1	$5,000.00	$5,000.00
NMDOT	706420	LIGHTING CONTROL CABINET - TWO CIRCUIT	EACH	1	$7,500.00	$7,500.00
NMDOT	707525	TYPE V STANDARD, 25'	EACH	10	$2,500.00	$25,000.00
NMDOT	709020	RIGID ELECTRICAL CONDUIT 2" (DIA.)	LF	5,000	$8.50	$42,500.00
NMDOT	710000	ELECTRICAL PULL BOX (STANDARD)	EACH	10	$500.00	$5,000.00
NMDOT	711106	SINGLE CONDUCTOR 6	LF	10,000	$2.00	$20,000.00
NMDOT	716701	LED ROADWAY LUMINAIRE	EACH	10	$1,500.00	$15,000.00
		ROADWAY SUBTOTAL				**$830,825.00**

Broadmoor Boulevard Project
Rio Rancho, NM
Conceptual Estimate
CoRR Project No. PW1914
Project No. 1910003700

ENGINEERS ESTIMATE

SPEC	NMDOT ITEM NO.	ITEM DESCRIPTION	UNIT	QTY	PRICE	AMOUNT
		DRAINAGE				
NMDOT	XXXXXX	STORM DRAIN IMPROVEMENTS	LS	1	$100,000.00	$100,000.00
		DRAINAGE SUBTOTAL				**$100,000.00**
		SEWER				
NMAPWA	920.08.02.02.03	MANHOLE ELEVATION ADJUSTMENT, OVER 6", CIP	EACH	5	$1,000.00	$5,000.00
		SEWER SUBTOTAL				**$5,000.00**
		CONSTRUCTION ENGINEERING				
NMDOT	621000	MOBILIZATION (10%)	LS	1	$94,000.00	$94,000.00
NMDOT	801000	CONSTRUCTION SURVEY & STAKING (3%)	LS	1	$29,000.00	$29,000.00
NMDOT	901000	CONTRACTOR SAMPLING & TESTING (5%)	LS	1	$47,000.00	$47,000.00
NMDOT	603280	SWPPP MANAGEMENT (1%)	LS	1	$10,000.00	$10,000.00
NMDOT	201000	CLEARING AND GRUBBING (2%)	LS	1	$19,000.00	$19,000.00
NMDOT	601000	REMOVAL OF STRUCTURES AND OBSTRUCTIONS (2%)	LS	1	$19,000.00	$19,000.00
NMDOT	618000	TEMPORARY TRAFFIC CONTROL MANAGEMENT (1%)	LS	1	$10,000.00	$10,000.00
NMDOT	618000	TEMPORARY TRAFFIC CONTROL AND PLAN (3%)	LS	1	$30,000.00	$30,000.00
		CONSTRUCTION ENGINEERING SUBTOTAL				**$258,000.00**
		PROJECT SUBTOTAL				$1,193,825.00
		30% E & C				$358,147.50
		NM GROSS RECEIPTS TAX (7.4375% ASSUMED)				$115,427.95
		PROJECT TOTAL				**$1,667,400.45**

Project Manual for:

RIO RANCHO SENIOR CENTER

Broadmoor Blvd NE
at City Center
Rio Rancho, NM 87144

City of Rio Rancho, NM

Department of Parks, Recreation & Community Services

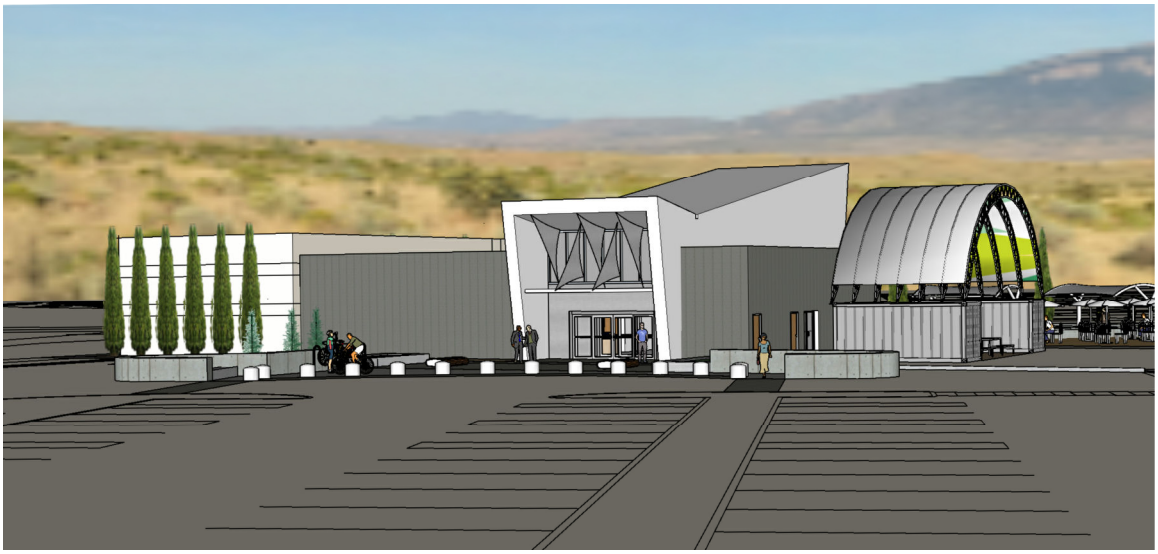

March 13, 2020

100% CD & PERMIT SET

G. DONALD DUDLEY AIA

ARCHITECT

SIMMS TOWER STUDIO 850
400 GOLD AVENUE SW
ALBUQUERQUE, NEW MEXICO
87102
TEL 505.243.8100

STATE OF NEW MEXICO
G. DONALD DUDLEY, JR.
No. 3673
3/13/2020
REGISTERED ARCHITECT

Set No:

RIO RANCHO SENIOR CENTER
FOR
CITY OF RIO RANCHO, NEW MEXICO

SPECIFICATIONS
TABLE OF CONTENTS

DIVISION 1 - GENERAL REQUIREMENTS

Section 01 10 00 - Summary
Section 01 20 00 - Price and Payment Procedures
Section 01 23 00 - Alternates
Section 01 25 13 - Product Substitution Procedures
Form 01 25 14 - Prior Approval Substitution Request Form
Form 01 25 15 - Contractor Substitution Request Form
Section 01 31 00 - Project Management and Coordination
Form 01 31 10 - CADD Database License, Indemnity, and Warranty Agreement
Section 01 33 00 - Submittal Procedures
Form 01 33 10 - Submittal Transmittal Form
Section 01 40 00 - Quality Requirements
Section 01 50 00 - Temporary Facilities and Controls
Section 01 60 00 - Product Requirements
Section 01 73 00 - Execution Requirements
Section 01 75 00 - Starting and Adjusting
Section 01 77 00 - Closeout Procedures
Section 01 78 00 - Closeout Submittals
Section 01 79 00 - Demonstration and Training

DIVISION 3 - CONCRETE

Section 03 11 00 - Concrete Formwork
Section 03 21 00 - Concrete Reinforcing
Section 03 30 00 - Cast-in-Place Concrete
Section 03 35 20 - Architectural Concrete Wall Finish
Section 03 35 30 - Concrete Floor Finishes
Section 03 48 00 - Precast Concrete Specialties

DIVISION 4 - MASONRY

Section 04 22 00 - Concrete Unit Masonry

DIVISION 5 - METALS

Section 05 12 00 - Structural Steel
Section 05 21 00 - Steel Joists
Section 05 30 00 - Metal Decking
Section 05 40 00 - Light-Gage Structural Metal Framing
Section 05 50 00 - Metal Fabrications
Section 05 51 35 - Aluminum Access Ladders

DIVISION 6 - WOOD AND PLASTICS, AND COMPOSITES

Section 06 10 00 - Rough Carpentry
Section 06 40 00 - Architectural Woodwork

DIVISION 7 - THERMAL AND MOISTURE PROTECTION

Section 07 14 00 - Fluid Applied Waterproofing
Section 07 21 00 - Building Insulation
Section 07 28 00 - Thermal and Air Barrier Wall System
Section 07 42 13 - Metal Wall Panels
Section 07 54 00 - Thermoplastic Membrane Roofing
Section 07 62 00 - Sheet Metal Flashings and Trim
Section 07 72 33 - Roof Hatches
Section 07 92 00 - Joint Sealants

DIVISION 8 - OPENINGS

Section 08 11 00 - Steel Doors and Frames
Section 08 14 00 - Wood Doors
Section 08 31 00 - Access Doors and Panels
Section 08 33 13 - Coiling Counter Doors
Section 08 41 14 - Aluminum Doors, Windows, and Framing
Section 08 42 30 - Automatic Sliding Entrance Doors
Section 08 71 00 - Door Hardware
Section 08 71 13 - Automatic Door Operators
Section 08 80 00 - Glazing

DIVISION 9 - FINISHES

Section 09 21 16 - Gypsum Board Assemblies
Section 09 24 00 - Portland Cement Plaster
Section 09 31 00 - Ceramic Tile
Section 09 51 10 - Suspended Acoustical Ceilings
Section 09 65 10 - Resilient Base and Accessories
Section 09 65 19 - Vinyl Tile Flooring
Section 09 68 13 - Vestibule Carpet Tile
Section 09 76 10 - Fiber Reinforced Plastic Coated Panels
Section 09 77 70 - Stainless Steel Wall Finish
Section 09 91 00 – Painting

DIVISION 10 - SPECIALTIES

Section 10 14 00 - Signage
Section 10 21 14 - Metal Toilet Compartments
Section 10 22 20 - Operable Partitions
Section 10 26 13 - Corner Guards
Section 10 28 13 - Toilet Accessories
Section 10 44 00 - Fire Extinguishers and Cabinets
Section 10 71 13 - Fabric Sun Control Shades
Section 10 75 00 - Flagpole

DIVISION 11 - EQUIPMENT

Section 11 31 10 - Classroom Appliances
Section 11 40 00 - Food Service Equipment

DIVISION 21 - FIRE SUPPRESSION

Section 21 1313 - Automatic Sprinkler Systems

DIVISION 22 - PLUMBING

Section 22 05 00 - Common Work Results for Plumbing
Section 22 05 17 - Sleeve and Sleeve Seals for Plumbing
Section 22 05 18 - Escutcheons for Plumbing Piping
Section 22 07 19 - Plumbing Piping Insulation
Section 22 11 16 - Domestic Water Piping
Section 22 13 16 - Sanitary Waste and Vent Piping
Section 22 14 13 - Roof Drainage Piping
Section 22 30 00 - Plumbing Equipment
Section 22 41 00 - Plumbing Fixtures

DIVISION 23 - HEATING, VENTILATING, AND AIR-CONDITIONS (HVAC)

Section 23 05 00 - Common Work Results for HVAC
Section 23 05 29 - Hangers and Supports
Section 23 05 93 - Testing, Adjusting, and Balancing for HVAC
Section 23 07 00 - HVAC Insulation
Section 23 11 23 - Facility Natural Gas Piping
Section 23 23 00 - Refrigerant Piping
Section 23 30 00 - Air Systems and Equipment
Section 23 35 33 - Listed Kitchen Ventilation System Exhaust Ducts
Section 23 37 13 - Diffusers, Registers, and Grilles
Section 23 38 13 - Commercial-Kitchen Hoods
Section 23 74 16 - Packaged Rooftop Air-Conditioning Units

DIVISION 26 B ELECTRICAL

Section 26 05 00 - Basic Electrical Materials and Methods
Section 26 05 19 - Low Voltage Electrical Power Conductors and Cables
Section 26 05 26 - Grounding and Bonding for Electrical Systems
Section 26 05 29 - Hangers and Supports for Electrical Systems
Section 26 05 33 - Raceways and Boxes for Electrical Systems
Section 26 05 53 - Identification for Electrical Systems
Section 26 05 73 - Electrical Systems Studies
Section 26 24 13 - Switchboards
Section 26 24 16 - Panelboards
Section 26 27 26 - Wiring Devices
Section 26 28 16 - Enclosed Switches and Circuit Breakers
Section 26 51 19 - LED Interior Lighting

DIVISION 27 - COMMUNICATIONS

Section 27 00 10 - General
Section 27 05 00 - Common
Section 27 05 28 - Pathways for Communication Systems
Section 27 05 53 - Identification
Section 27 11 16 - Cabinets, Racks, and Frames
Section 27 11 19 - Termination Blocks and Patch Panels
Section 27 15 13 - Copper Horizontal Cabling
Section 27 15 43 - Faceplates and Connectors

DIVISION 28 - ELECTRONIC SAFETY AND SECURITY

Section 28 31 11 - Digital Addressable For Alarm System

DIVISION 31 - EARTHWORK

Section 31 10 00 - Site Clearing
Section 31 22 00 - Grading
Section 33 23 16.13 - Trenching
Section 31 23 16 - Excavation
Section 31 23 23 - Fill
Section 31 37 00 - Riprap

DIVISION 32 - EXTERIOR IMPROVEMENTS

Section 32 11 23 - Aggregate Base Courses
Section 32 12 16 - Asphalt Paving
Section 32 13 13 - Concrete Paving
Section 32 17 23.13 - Painted Pavement Markings

DIVISION 33 - UTILITIES

Section 33 11 16 - Site Water Utility Distribution Piping
Section 33 13 00 - Disinfecting of Water Utility Distribution
Section 33 31 11 - Site Sanitary Utility Sewerage Piping
Section 33 41 11 - Site Storm Utility Drainage Piping

END OF
SPECIFICATIONS TABLE OF CONTENTS

SECTION 01 10 00

SUMMARY

PART 1 - GENERAL

1.1 SUMMARY

A. Section includes:

1. General description of Work.
2. Work by others.
3. Project phasing.
4. Contractor use of site.
5. Definitions and abbreviations.

B. Related sections:

1. Section 01 23 00 - Alternates: Additive alternates which increase scope of Project.
2. Section 01 50 00 - Temporary Facilities and Controls: Site mobilization plan.

1.2 WORK COVERED BY CONTRACT DOCUMENTS

A. Work of this Contract consists of construction of a new Senior Center Complex at Broadmoor Boulevard, New Mexico 87144 consisting of:

1. One story, 7,500 square foot Senior Center Building.
2. Related access road, paving, parking lot, sidewalks, landscaping, concrete benches and walls, planters, and other site work.
3. Electrical, water, gas, sewer, and other utilities.
4. Storm water drain and detention area.

1.3 CONTRACTOR'S DUTIES

A. Except as noted, provide and pay for all labor, materials, and equipment.

B. Pay required sales, gross receipts, and other taxes. Owner will pay Contractor applicable New Mexico gross receipts tax including local option tax and any increase in tax becoming effective after Contract date. Tax is to be included in bid price and shown as a separate line on Applications for Payment.

C. Secure and pay for permits, fees, and licenses necessary for execution of Work as applicable at time of receipt of bids.

D. Give required notices.

E. Comply with codes, ordinances, regulations, and other legal requirements of public authorities which bear on performance of Work.

F. Request required inspections from public authorities, correct any noted deficiencies, and obtain certifications of satisfactory inspection. Deliver certificates to Owner in accordance with Section 01 78 00 - Closeout Submittals.

1.4 WORK BY OTHERS

A. Owner will perform or award separate construction contracts for:

1. Kitchen shelving.

2. Exterior storage units.

3. Flags for pole specified in Section 10 75 00 - Flagpole.

4. Telephone and communications equipment.

5. Other items indicated on Drawings or designated as "NOT IN CONTRACT" (NBC).

B. Owner's responsibilities: Arrange, schedule, and pay for work by others.

C. Contractor's responsibilities: Coordinate work with other contractors and installers.

1.5 CONTRACTOR USE OF SITE

A. Existing site will not be occupied and in use during construction and Contractor will have unrestricted use of site.

B. Access to site by trucks, equipment, and automobiles: Limited to route and entrances designated on Drawings and in Section 01 50 00 - Temporary Facilities and Controls.

C. Unless otherwise agreed to in advance by Owner, construction shall be performed only during these time periods:

a. 7 AM to 4 PM, Monday through Friday.

1. Saturday and Sunday if scheduled with and authorized by Owner in advance.

D. Construction activities shall be limited to areas of actual construction.

E. Do not allow dust and debris to blow onto adjacent areas.

F. Emergency exits shall be maintained during construction.

1.6 IDENTIFICATION OF ENTITIES

A. Where the term "Architect" or "Engineer" is used in the Contract Documents it is defined as the authorized representative designated by Owner as the Architect/Engineer of the Project, acting within the scope of the particular duties entrusted to such representative.

1. Architect: G. Donald Dudley Architect, Ltd.

   a. Project Manager: Don Dudley, Jr., AIA

   b. Address:
      Simms Tower, Suite 850
      400 Gold Avenue SW
      Albuquerque, New Mexico 87102

   c. Telephone number: 505-243-8100.

   d. Mobile phone number: 505-280-6820.

   e. E-mail address: don.dudley@dondudleydesign.com.

B. Where the term "Owner" is used in the Contract Documents, it is defined as City of Rio Rancho, New Mexico; Parks Recreation and Community Services Department.

1. Acting City Manager: Peter Wells.

2. Project contact: Connie Peterson, Director of Parks, Recreation, and Community Services Department.

3. Division Manager, Senior Services: Liz Smyth.

4. Project Manager: Dyane Sonier, Resource Development Manager.

5. Address: City of Rio Rancho, 3200 Civic Center Circle NE, Rio Rancho, New Mexico 87144.

6. Telephone number: 505-896-8728.

7. E-mail address for Dyane Sonier: DSonier@rrnm.gov

1.7 DEFINITIONS

A. Refer to General Conditions of the Contract for definitions of terms used within Contract Documents.

B. Additional terms used within Specifications shall have the following definitions:

1. Gage: Metal thickness. Same meaning as gauge. Based on these standards:

   a. Wire diameter: American (Brown and Sharp).

   b. Sheet metal: U.S. Standard.

2. Gauge: Metal thickness. Spelling variation of gage.

3. Products: Materials, manufactured items, components, fixtures, machinery, equipment, or systems forming the Work but not including machinery, equipment, and other aids used for preparing, fabricating, conveying, and installing the Work.

4. Supply: Furnish, deliver, and unload at Project site. Same meaning as furnish.

5. Furnish: Supply, deliver, and unload at Project site. Same meaning as supply.

6. Install: Operations at Project site to incorporate products into the Work such as unpacking, assembling, anchoring, erecting, applying, placing, curing, finishing, and preparing for use.

7. Provide: To supply or furnish a product and to also install it.

8. Execution: Operations at Project site including preparatory actions, installing, and post-installation adjusting, testing, cleaning, and demonstrating.

1.8 ABBREVIATIONS

A. Abbreviations used within the Specifications are defined as follows. For abbreviations not listed, contact Architect for definitions.

ASTM - American Society for Testing and Materials
ANSI - American National Standards Institute
CF - Cubic feet
CFM - Cubic feet per minute
CxA - Commissioning Agent
F - Fahrenheit
FPT - Functional performance test
HVAC - Heating, ventilating, and air conditioning
IAQ - Indoor air quality
ICC IBC - International Building Code as published by International Code Council
LF - Linear feet
LB - Pound
MPH - Miles per hour
SF - Square feet
SY - Square yards
PSI - Pounds per square foot
RPM - Revolutions per minute
UL - Underwriters Laboratory

PART 2 - PRODUCTS

Not used.

PART 3 - EXECUTION

Not used.

END OF SECTION

SECTION 01 20 00

PRICE AND PAYMENT PROCEDURES

PART 1 - GENERAL

1.1 SUMMARY

A. Section includes:

1. Schedule of Values.

2. Applications for Payment.

B. Related documents and sections:

1. General Conditions of the Contract - AIA A201, 2007 Edition as supplemented by the City of Rio Rancho Supplemental General Conditions.:

a. Procedures for Change Orders and calculating cost of Change Orders.

b. General procedures for Schedule of Values, Applications for Payment, Certificates for Payment, and Progress Payments.

2. Section O1 21 13 - Cash Allowances: Cash allowances to cover items determined during construction.

3. Section 01 23 00 - Alternates: Additive alternates which increase scope of Project.

C. Section 01 31 00 - Project Management and Coordination: Progress Schedule.

1.2 SCHEDULE OF VALUES

A. Submit 5 copies and PDF electronic copy of Schedule of Values within time designated in General Conditions. At request of Architect submit substantiating data.

B. Submit as typed schedule on standard form or electronic media printout approved by Architect with PDF electronic copy.

C. Format: Use Project Manual Table of Contents for items. Identify each line item with number and title of corresponding specification section. Provide sufficient detail to allow computation of values for progress payments during construction. Sum of all values shall equal total Contract Sum.

D. Overhead and profit: Include within each line item a directly proportional amount of Contractor's overhead and profit.

E. Accepted alternates: Line item amounts shall include applicable work for additive alternates accepted by Owner and included in Contract Sum.

F. Provide separate line items for:

1. Each Contract modification.

2. Final Project closeout amount: Amount of $20,000.00 to cover closeout activities and final completion of Project:

   a. Incomplete items and deficiencies resulting from Final Inspection.

   b. Final cleaning and removal of temporary facilities and controls.

   c. Preparation of project record documents.

   d. Operation and maintenance manuals, demonstration, and training.

   e. Closeout submittals.

   f. Other Project closeout procedures and requirements.

3. Bonds.

4. Insurance.

5. New Mexico gross receipts tax.

G. Revise Progress Schedule and resubmit to list as separate line items for approved Change Orders.

1.3 APPLICATIONS FOR PAYMENT

A. Submit 5 copies of each application on Contractor's electronic media driven form or standard form approved by Architect.

B. Prior to acceptance of each Application for Payment, Architect will review Project Record Drawings specified in Section 01 78 00 - Closeout Submittals to ensure that recorded data is current.

C. Payment period: As stipulated in General Conditions.

D. Use Schedule of Values for listing items in Applications for Payment.

E. Line item format: Indicate total amount for each item, percent complete, cost of completed item, cost of materials stored at site for each item, subtotal cost of work complete and materials stored, percent remaining to complete, and cost of items remaining to complete.

F. Change orders: List each authorized Change Order as a separate line item and in same format as other line items.

G. Provide subtotals and total for work completed.

H. New Mexico gross receipts tax: Indicate tax as separate line item followed by total amount of requested payment.

I. Retainage: Owner will not deduct retainage from payments to Contractor.

J. Time: Indicate actual and percent of time used and time remaining.

K. Applications shall be signed by authorized officer of Contractor and dated.

L. Include with Application for Payment:

1. Appropriate invoices for materials stored off site.

2. Updated Progress Schedule as specified in Section 01 31 00 - Project Management and Coordination.

M. At request of Architect, provide substantiating data justifying dollar amounts in question.

END OF SECTION

SECTION 01 23 00

ALTERNATES

PART 1 - GENERAL

1.1 SUMMARY

A. Section includes: Procedures and descriptions for additive alternates which increase scope of Project.

B. Related documents and sections:

1. Agreement Between Owner and Contractor: Incorporation of accepted alternates to determine Contract Sum.

1.2 CONDITIONS

A. All requirements of General and Supplementary Conditions, applicable sections of Specifications, and applicable portions of Drawings shall govern scope, quality, and execution of alternates.

B. Owner shall have right to accept alternates in any order or combination prior to award of Contract as allowed by available funding at no change in price listed on Bid Form.

1.3 ADDITIVE ALTERNATE NO. 1 - MULTI-PURPOSE ROOM

A. Alternate requires construction of Multi-Purpose Room No. 120 as shown and detailed on Drawings. Alternate work includes:

1. Structural steel wall and roof framing.

2. Exterior doors and windows.

3. Membrane roof system.

4. Roof mounted mechanical system.

5. Interior wall, floor, and ceiling finishes.

6. Overhead structural support for installation of operable partition specified in Section 10 22 20 - Operable Partitions.

7. Aluminum exterior ladder providing access from Multi-Purpose roof to adjacent building roof as specified in Section 05 51 35 - Aluminum Access Ladders.

8. Electrical service and lighting systems.

9. Other items as indicated on Drawings and as required for a complete, functional structure.

B. If alternate is not accepted by Owner, provide as part of Base Bid the following items as detailed on Drawings:

1. Concrete floor slab and footings as required for future construction of Multi-Purpose Room.

2. Structural steel supports and framing in North wall of building to support future roof framing of Multi-Purpose Room.

3. Install cement plaster (stucco) exterior finish on north Building wall in lieu of interior gypsum board finish.

4. Provide exterior steel doors as specified in Section - Steel Doors and Frames for Storage Rooms 118 and 119.

5. Provide thermal insulation and metal wall panel finish specified in Section 08 42 13 - Metal Wall Panels for North Wall.

1.4 ADDITIVE ALTERNATE NO. 2 - FOLDING PARTITION SYSTEM FOR MULTI-PURPOSE SYSTEM

A. Alternate requires provision of operable folding horizontal partition system for Multi-Purpose Room as specified in Section 10 22 20 - Operable Partitions. Partitions.

B. This alternate will only be selected if Owner selects Alternate No, 1 - Multi-Purpose Room.

1.5 ADDITIVE ALTERNATE NO. 3 - FOLDING PARTITION SYSTEM FOR CLASSROOMS

A. Alternate requires provision of operable folding horizontal partition system for separating Classrooms A-116 and B-117 as specified in Section 10 22 20 - Operable Partitions.

B. If alternate is not accepted by Owner, provide as part of Base Bid storage recess and overhead structural support for future installation of operable partition.

1.6 ADDITIVE ALTERNATE NO. 4 - KITCHEN EQUIPMENT PACKAGE

A. Alternate requires provision of kitchen equipment for Kitchen 105 and Classroom B-117 as specified in Section 11 40 00 - Food Service Equipment and scheduled on Drawings and for kitchen casework specified in Section 06 40 00 - Architectural Woodwork..

B. If alternate is not accepted by Owner, provide as part of Base Bid for future installation of kitchen equipment:

1. Plumbing and electrical rough-ins as detailed on Drawings and specified in Division 22 - Plumbing and Division 26 - Electrical.

2. Roof blockouts and accessories and ceiling system opening for future exhaust hood. installation. Install acoustical ceiling panels in temporary opening.

1.7 ADDITIVE ALTERNATE NO. 5 - NOT USED

1.8 ADDITIVE ALTERNATE NO. 6 - AUTOMATIC ENTRANCE DOORS

A. Alternate requires provision of automatic, sensor activated, glazed entrance doors as specified in Section 08 42 30 - Automatic Sliding Entrance Doors and identified in Door Schedule on Drawings.

B. If alternate is not accepted by Owner, provide as part of Base Bid hinged , aluminum framed, glazed doors specified in Section 08 41 14 - Aluminum Doors, Windows, and Framing.

1.9 PROCEDURES

A. Consider all work that must be accomplished for complete incorporation of alternates including modifications to Base Bid items.

B. Include in lump sum prices for alternates all costs of labor, materials, equipment, permits, fees, insurance, bonds, overhead, and profit.

C. Immediately after award of Contract, advise all necessary personnel and suppliers as to which alternates have been selected by Owner. Use all means necessary to alert those personnel and suppliers involved as to all changes in the work caused by Owner's selection or rejection of alternates.

D. Coordinate related work and modify surrounding work to integrate work of each alternate.

PART 2 - PRODUCTS

Not used.

PART 3 - EXECUTION

Not used.

END OF SECTION

SECTION 01 23 00

ALTERNATES

PART 1 - GENERAL

1.1 SUMMARY

A. Section includes: Procedures and descriptions for additive alternates which increase scope of Project.

B. Related documents and sections:

1. Agreement Between Owner and Contractor: Incorporation of accepted alternates to determine Contract Sum.

1.2 CONDITIONS

A. All requirements of General and Supplementary Conditions, applicable sections of Specifications, and applicable portions of Drawings shall govern scope, quality, and execution of alternates.

B. Owner shall have right to accept alternates in any order or combination prior to award of Contract as allowed by available funding at no change in price listed on Bid Form.

1.3 ADDITIVE ALTERNATE NO. 1 - MULTI-PURPOSE ROOM

A. Alternate requires construction of Multi-Purpose Room No. 120 as shown and detailed on Drawings. Alternate work includes:

1. Structural steel wall and roof framing.

2. Exterior doors and windows.

3. Membrane roof system.

4. Roof mounted mechanical system.

5. Interior wall, floor, and ceiling finishes.

6. Operable folding horizontal partition system for subdividing Multi-Purpose Room as specified in Section 10 22 20 - Operable Partitions.

7. Aluminum exterior ladder providing access from Multi-Purpose roof to adjacent building roof as specified in Section 05 51 35 - Aluminum Access Ladders.

8. Electrical service and lighting systems.

9. Other items as indicated on Drawings and as required for a complete, functional structure.

B. If alternate is not accepted by Owner, provide as part of Base Bid the following items as detailed on Drawings:

1. Concrete floor slab and footings as required for future construction of Multi-Purpose Room.

2. Structural steel supports and framing in North wall of building to support future roof framing of Multi-Purpose Room.

3. Knock-out panels in North wall to accommodate future access to Storage Rooms 118 and 119 and storage space for operable partition.

4. Provide thermal insulation and cement plaster finish for North Wall.

1.4 ADDITIVE ALTERNATE NO. 2 - FOLDING PARTITION SYSTEMS

A. Alternate requires provision of operable folding horizontal partition system for separating Classrooms A-116 and B-117 as specified in Section 10 22 20 - Operable Partitions.

B. If alternate is not accepted by Owner, provide as part of Base Bid storage recess and overhead structural support for future installation of operable partition.

1.5 ADDITIVE ALTERNATE NO. 3 - KITCHEN EQUIPMENT PACKAGE

A. Alternate requires provision of kitchen equipment for Kitchen 105 and Classroom B-117 as specified in Section 11 40 00 - Food Service Equipment and scheduled on Drawings and for kitchen casework specified in Section 06 40 00 - Architectural Woodwork..

B. If alternate is not accepted by Owner, provide as part of Base Bid plumbing and electrical rough-ins as detailed on Drawings and specified in Division 22 - Plumbing and Division 26 - Electrical.

1.6 ADDITIVE ALTERNATE NO. 4 - VINYL TILE FLOOR FINISH

A. Alternate requires installing luxury vinyl tile as specified in Section 09 65 66 - Resilient Vinyl Tile Flooring instead of sheet resilient flooring specified in Section 09 65 66 - Resilient Vinyl Flooring in areas identified in Finish Schedule on Drawings.

1.7 ADDITIVE ALTERNATE NO. 5 - AUTOMATIC ENTRANCE DOORS

A. Alternate requires provision of automatic, sensor activated, glazed entrance doors as specified in Section 08 42 30 - Automatic Entrance Doors and identified in Door Schedule on Drawings.

B. If alternate is not accepted by Owner, provide as part of Base Bid hinged , aluminum framed, glazed doors specified in Section 08 41 14 - Aluminum Doors, Windows, and Framing.

1.8 PROCEDURES

A. Consider all work that must be accomplished for complete incorporation of alternates including modifications to Base Bid items.

B. Include in lump sum prices for alternates all costs of labor, materials, equipment, permits, fees, insurance, bonds, overhead, and profit.

C. Immediately after award of Contract, advise all necessary personnel and suppliers as to which alternates have been selected by Owner. Use all means necessary to alert those personnel and suppliers involved as to all changes in the work caused by Owner's selection or rejection of alternates.

D. Coordinate related work and modify surrounding work to integrate work of each alternate.

PART 2 - PRODUCTS

Not used.

PART 3 - EXECUTION

Not used.

END OF SECTION

SECTION 01 25 13

PRODUCT SUBSTITUTION PROCEDURES

PART 1 - GENERAL

1.1 SUMMARY

A. Section includes requirements for product options and substitution procedures.

1.2 PRODUCT OPTIONS

A. For products specified by reference standards or by description only, provide any product meeting those standards or description.

B. For products specified by naming one or more manufacturers with the designation that no substitutions are allowed, provide only named products.

C. For products specified by naming one or more manufacturers, provide named products and approved substitute products listed in Addenda, or submit a request for substitution in accordance with Paragraph 1.3.

C. When a manufacturer's specific product is specified, that product shall be the basis for evaluating substitution requests and establishing requirements for product type, characteristics, performance, and quality.

1.3 SUBSTITUTIONS

A. During bidding, written substitution requests from qualified bidders, subcontractors, and manufacturers for substitutions will be considered.

1. Submit separate request for each substitution with Form 01 25 14 - Prior Approval Substitution Request Form. Copy of Form follows this Section.

2. Submit substitution request in accordance with procedures and time limitations stated in Instructions to Bidders.

3. Substitutions approved during bidding will be listed in Addenda.

B. After Contract award:

1. After signing of Agreement Between Owner and Contractor, written requests for substitutions will be considered if one or more of these conditions exist:

a. Unavailability of specified product through no fault of Contractor.

b. Qualified installer is not available for specified product.

c. Substitution is required for compliance with final interpretation of code requirements or other regulations.

d. Subsequent information discloses inability of specified product to perform properly or to fit in designated space.

e. Refusal of manufacturer to certify or guarantee performance of the specified product.

2. Submit separate request for each substitution with Form 01 25 15 - Substitution Request Form. Copy of Form follows this Section. Provide data documenting need for substitution and substantiating compliance of proposed product with Contract Documents. Include proposed changes to Contract Amount and Time if substitution is accepted.

3. Architect will determine acceptability of proposed substitutions and notify Contractor in writing. Accepted substitutions will be included by Change Order with associated modifications of Contract Amount and Time.

4. Substitutions will not be considered after Contract Award if indicated or implied on shop drawings and product data submittals.

C. Use of approved substitution listed in Addenda or request for substitution after Contract Award shall constitute representation that Contractor:

1. Has investigated product and determined it meets or exceeds quality level of specified product.

2. Will provide same warranty for substitution as for specified product.

3. Will coordinate installation and make changes to other work required to accommodate accepted substitution and complete Work.

4. Will pay all costs of modifying Project design caused by use of proposed substitution such as designing, engineering, and drafting at Architect's and Consultants' current, standard rates.

5. Waives claims for additional costs or time extensions related to substitution which later become apparent.

D. Procedures:

1. During bidding: Submit PDF plus 3 copies of request for substitution to Owner’s contact listed in Instruction to Bidders.

a. Do not submit substitution requests directly to Architect or Design Consultants. Such requests will not be accepted or reviewed.

b. Limit each request to one proposed substitution.

2. After Contract Award: Submit PDF plus 3 copies of request for substitution to Architect.

a. Do not submit substitution requests directly to Owner or Design Consultants. Such requests will not be accepted or reviewed.

b. Limit each request to one proposed substitution.

E. Include in request:

1. Complete data substantiating compliance of proposed substitution with Contract Documents.

2. For products:

a. Product identification, including manufacturer's name and address.

b. Manufacturer's literature containing product description, performance and compliance data, and reference standards.

c. Test reports.

d. Samples as required.

3. For construction methods:

a. Detailed description of proposed method.

b. Drawings illustrating method.

4. Itemized comparison of proposed substitution with product or method specified. List differences between proposed substitution and specified product or method.

5. Any required changes to dimensions indicated on Drawings.

6. Description of affects on other trades.

7. Data relating to changes in construction schedule.

8. For requests submitted after Contract award, give cost data comparing proposed substitution with specified product and amount of proposed change to Contract Sum.

PART 2 - PRODUCTS

Not used.

PART 3 - EXECUTION

Not used.

END OF SECTION - FORMS FOLLOW

PRIOR APPROVAL SUBSTITUTION REQUEST FORM

The undersigned, qualified bidder, subcontractor, manufacturer, or supplier requests that the following product be accepted for
use in the Project in lieu of _____

_____

specified in Section _____

PRODUCT: _____

MODEL NO.: _____

MANUFACTURER: _____

ADDRESS: _____

Attached are the following circled items:

1. Product description including specifications, performance and compliance data, and applicable reference standards.
2. Drawings.
3. Photographs.
4. Samples.
5. Test reports.
6. Tabulated comparison with specified product. List differences between proposed substitution and specified product.
7. Any required changes to dimensions indicated on Drawings.
8. Description of affects on other trades.
9. Data relating to changes in construction schedule.
10. For items requiring color selections, full range of manufacturer's color samples.
11. Other: _____

The undersigned certifies that the following statements are correct. Explanations for all items which are **not true** are attached.

1. Proposed substitution has been thoroughly investigated and function, appearance, and quality meet or exceed that of specified product. TRUE FALSE
2. Same warranty will be provided for substitution as for specified product. TRUE FALSE
3. **No** aspect of Project will require re-design in order to properly install proposed substitution. TRUE FALSE

4. All costs of modifying Project design such as designing, engineering, and drafting, caused by use of proposed substitution will be paid by Contractor at Architect's and Consultants' current, standard rates. TRUE FALSE

5. Use of substitution will **not** adversely affect:

   a. Dimensions shown on Drawings. TRUE FALSE

   b. Construction schedule and date of completion. TRUE FALSE

   c. Work of other trades. TRUE FALSE

6. Maintenance service and replacement parts for proposed substitution will be readily available in Albuquerque/ Rio Rancho area. TRUE FALSE

7. Proposed substitution does **not** contain asbestos or lead in any form. TRUE FALSE

Submitted By:

COMPANY:_____
ADDRESS: _____

TELEPHONE NUMBER: _____

NAME OF PERSON SUBMITTING REQUEST: _____

TITLE: _____

DATE: _____

CONTRACTOR SUBSTITUTION REQUEST FORM

The undersigned, as Contractor for the above Project, requests that the following product be accepted for use in the Project

PRODUCT: _____

MODEL NO.: _____

MANUFACTURER: _____

ADDRESS: _____

The above product would be used in lieu of

PRODUCT: _____

specified in

SECTION: _____

PARAGRAPH: _____

Reason for substitution request: _____

_____

Attached are the following circled items:

1. Product description including specifications, performance and compliance data, and applicable reference standards.
2. Drawings.
3. Photographs.
4. Samples.
5. Test reports.
6. Tabulated comparison with specified product. List differences between proposed substitution and specified product.
7. Any required changes to dimensions indicated on Drawings.
8. Description of affects on other trades.
9. Data relating to changes in construction schedule.
10. For items requiring color selections, full range of manufacturer's color samples.
11. Documentation of reason for request.
12. Cost data for comparing proposed substitution with specified product.
13. Other: _____

The undersigned certifies that the following statements are correct. Explanations for all items which are **not true** are attached.

1. Proposed substitution has been thoroughly investigated and function, appearance, and quality meet or exceed that of specified product. TRUE FALSE

2. Same warranty will be provided for substitution as for specified product. TRUE FALSE

3. **No** aspect of Project will require re-design in order to properly install proposed substitution. TRUE FALSE

4. All costs of modifying Project design caused by use of proposed substitution such as designing, engineering, and drafting will be paid by Contractor at Architect's and Consultants' current, standard rates. TRUE FALSE

5. Use of substitution will **not** adversely affect:

   a. Dimensions shown on Drawings. TRUE FALSE

   b. Construction schedule and date of completion. TRUE FALSE

   c. Work of other trades. TRUE FALSE

6. Maintenance service and replacement parts for proposed substitution will be readily available in Albuquerque/Rio Rancho area. TRUE FALSE

7. Proposed substitution does **not** contain asbestos or lead in any form. TRUE FALSE

8. All changes to Contract Sum related to use of proposed substitution are included in price listed below. Contractor waives claims for additional costs related to acceptance of substitution which may subsequently become apparent. TRUE FALSE

If substitution request is accepted:

Contract Sum will be [decreased] [increased] by $ _____

Contract Time will be [decreased] [increased] by _____ calendar days.

Submitted By:

CONTRACTOR: _____

ADDRESS: _____

TELEPHONE NUMBER: _____

NAME OF PERSON SUBMITTING REQUEST: _____

TITLE: _____

DATE: _____

SECTION 01 31 00

PROJECT MANAGEMENT AND COORDINATION

PART 1 - GENERAL

1.1 SUMMARY

A. Section includes:

1. General requirements for coordination of Work.
2. Field engineering.
3. Requirements for participation in and administration of:
   a. Pre-construction conference.
   b. Progress meetings.
   c. Pre-installation conferences.
4. Progress schedule.

B. Related documents and sections:

1. Instructions to Bidders: Pre-Bid Conference.
2. Section 01 10 00 - Summary: Work by others.
3. Section 01 40 00 - Quality Requirements: Mock-ups and Field Samples.

1.2 SUBMITTALS

A. Use of CADD files:

1. Under certain conditions, Contractor will be permitted use of Architect's and Design Consultant's CADD files for documentation of record drawings, submittals, or coordination drawings.
2. Architect and Design Consultants shall be compensated for time required to format the CADD files for delivery to Contractor. Such work may include removal of title blocks, professional seals, calculations, and proprietary information.
3. Contractor shall complete License, Indemnity and Warranty Agreement following this Section, including Contractor's name, address, and signature of Contractor's representative prior to request for CADD file usage. Other Divisions of these specifications may include License, Indemnity and Warranty Agreement forms specific to the design professional responsible for those Divisions, in which case those forms shall be used for drawings prepared by that design professional.

B. Provide in accordance with Section 01 33 00 - Submittal Procedures:

1. Coordination drawings:

a. Provide where coordination is critical for installation of components fabricated off site and where space is limited and maximum utilization of space is required, or where otherwise requested by Architect or required by other Specification Section.

b. Show relationship and integration of components and construction entities, required installation sequence, dimensions, and tolerances.

C. Staff assignment list: Submit prior to Pre-Construction Conference.

1. List of Contractor's principal staff assignments for Project. Indicate names, duties and responsibilities, addresses, and telephone numbers.

2. Distribute staff list and post in field office and elsewhere on site as appropriate to provide coordination information.

3. Project Superintendent: Submit resume showing prior experience as superintendent of projects of similar size and scope. Naming more than one Project Superintendent to be in charge depending which is present at site will not be acceptable. Inform Architect in writing prior to any proposed change in Project Superintendent.

1.3 GENERAL COORDINATION REQUIREMENTS

A. Scheduling: Coordinate scheduling, submittals, and work of various specification sections to ensure efficient and orderly sequence of installation of interdependent construction elements. Ensure that work of one specification section is not installed in such a manner as to limit, preclude, or restrict work of another section.

B. Coordinate completion and clean up of work of separate specification sections in preparation for final inspection specified in Section 01 77 00 - Closeout Procedures.

C. After acceptance of Work, coordinate access to facility for required maintenance, monitoring, adjusting, and correcting deficiencies in manner to minimize disruption of Owner's activities.

D. Coordinate with Owner regarding work of Owner's forces and separate contractors. Ensure coordination of such work with Project Schedule.

1.4 FIELD ENGINEERING

A. Existing control datum for field engineering is indicated on Drawings.

B. Locate or establish survey control and reference points prior to starting site construction. Protect points during construction and record locations with horizontal and vertical data on Project Record Documents in accordance with Section 01 78 00 - Closeout Submittals.

C. Prior to start of construction, verify location of control points and layout information on Drawings relative to property, setback, and easement lines.

D. Provide competent field engineering services. Establish elevations, lines, and levels utilizing recognized engineering survey practices. Periodically verify layouts.

E. Promptly replace dislocated control and reference points based on original survey control.

1.5 PRE-CONSTRUCTION CONFERENCE

A. Conference will be held after execution of the Agreement. Conference will be held at the site or other location convenient to all parties.

B. Attendance: Owner, or other designated Facility representative, Architect, consultants, Contractor, Project Superintendent, and major subcontractors and suppliers.

C. Agenda:

1. Distribution of Contract Documents.
2. Designation and description of roles of responsible personnel representing, Owner, Contractor, and Architect.
3. Status of permits and Notice to Proceed.
4. Use of premises by Contractor and Owner, Owner's occupancy requirements, work hours, and special schedule considerations.
5. Construction schedule, work sequence, and delivery priorities.
6. Weekly job meeting schedule.
7. Presentation and discussion of Site Mobilization Plan and Site Safety Plan specified in Section 01 50 00 - Temporary Facilities and Controls.
8. Construction facilities, controls, and temporary utilities.
9. Procedures for processing submittals, applications for payment, substitution requests, field decisions, communications, and contract modifications.
10. Wage rates.
11. Security, safety, first aid, and housekeeping procedures.
12. Procedures for spotting utility lines.
13. Procedures for maintaining project record documents.
14. Requirements for start up of equipment.
15. Testing and inspection procedures.
16. Inspection and acceptance of equipment put into service during construction period.
17. Contract closeout procedures.
18. Storm Water Pollution Prevention Plan (SWPPP) requirements as applicable.
19. Other pertinent items.

D. Meeting minutes shall be prepared and distributed by Architect.

1.6 PROGRESS MEETINGS

A. Schedule and administer construction progress meetings throughout progress of Work. Meetings shall be held weekly or more frequently as required. Location of meetings to be on site or other location approved by Architect.

B. Make arrangements for meetings, prepare agenda, and distribute notice of meetings to participants, Architect, and Owner 3 days in advance of meeting.

C. Preside at meetings. Record minutes and distribute copies within 3 days after meeting to participants, entities affected by meeting decisions, Architect, and Owner.

D. Attendance: Contractor, Job Superintendent, and subcontractors and suppliers as appropriate to agenda. Owner's representative, Architect, and consultants may attend as appropriate.

E. Prepare agenda to cover topics pertinent to continued progress and successful completion of Work. Suggested topics:

1. Review previous meeting minutes.

2. Review schedules and progress, identify impediments, and determine measures to maintain schedules.

3. Review field observations, problems, and decisions.

4. Status of submittals.

5. Off-site fabrication and delivery schedules.

6. Quality control.

7. Review proposed change orders and effect on schedule.

1.7 PRE-INSTALLATION CONFERENCES

A. Convene a pre-installation conference at site when:

1. Required by an individual specification section.

2. Work involves, is required for, or is affected by:

a. Blocking locations for wall mounted equipment and components.

b. Mounting locations for items requiring access by people with disabilities.

c. Rough-in location for electrical power outlets and back boxes for special electrical systems.

d. Rough-in locations for plumbing fixtures.

3. Additional pre-installation conferences requested by Architect.

B. Require attendance of all entities directly concerned with item of work.

C. Notify Architect 4 days in advance of meeting.

D. Prepare agenda and preside at conference. Record minutes, and distribute copies within 3 days to participants and Architect.

E. At meeting, review conditions of installation, preparation and installation procedures, and coordination with related work.

1.8 PROGRESS SCHEDULE

A. Format: Horizontal bar chart:

1. Approximate sheet size: 17 by 28 inches.

2. Provide separate bar for each major item of Work. Arrange in sequence and identify bars with specification section numbers and titles from Project Manual Table of Contents.

3. Horizontal scale: Time with first work day of each month identified. Adjust scale to show entire construction period plus extensions.

4. Vertical spacing: Allow space for notations and revisions.

B. Show complete sequence of construction by activity. Indicate:

1. Dates for beginning and completion of each construction item.

2. Projected percentage of completion for each item as of first work day of each month.

3. Projected percentage of completion for total Work as of first day of each month.

4. Work of separate construction phases.

5. Required dates for return of specific submittals and for selection of finishes.

C. Procedures:

1. Submit for review by Architect 3 copies and a PDF electronic file of preliminary Progress Schedule within 20 days of effective date of Agreement Between Owner and Contractor.

2. Revise to address review comments and resubmit.

3. Update Progress Schedule and submit 3 copies with each Application for Payment.

a. Identify progress of each activity to date of submittal and projected completion date.

b. Identify activities modified since previous submittal and other identifiable changes.

c. Provide narrative report as needed to define problem areas, anticipated delays, and impact on Schedule. Report corrective action taken or proposed and its effect.

4. Upon request, provide an electronic file compatible with Microsoft Project Pro software to City Project Manager in version acceptable to City Project Manager. Provide updates to this electronic file when requested by City Project Manager.

PART 2 - PRODUCTS

2.1 EQUIPMENT

A. Verify utility requirements and characteristics of equipment are compatible with facility utilities. Coordinate work of various specification sections having interdependent requirements for installing, connecting to, and placing in service such equipment.

PART 3 - EXECUTION

3.1 INSTALLATION

A. Space requirements:

1. Coordinate space requirements and installation of mechanical, electrical, and other work shown diagrammatically on Drawings. Follow routing shown for pipes, ducts, and wireways as closely as practical. Utilize spaces efficiently to maximize accessibility for other installations, maintenance, and repairs.

2. Where space is limited, coordinate installation of components to ensure maximum access for maintenance. Ensure space provided around equipment and fixtures complies with applicable codes.

B. Concealment: In finished areas, conceal pipes, ducts, and wireways within construction except as otherwise indicated. Where practical, conceal supports, fasteners, and other attachment devices.

C. Arrangement:

1. Unless otherwise indicated, installations shall be aligned vertically and horizontally. Place piping, conduit, wireways, and other linear items parallel with lines of building.

2. Coordinate mounting heights and spacings of components so that finished work is neat and orderly with organized appearance.

3. Repetitive items such as hangers and fasteners shall be equally spaced unless indicated otherwise.

D. Blocking, anchors, and supports: Determine and coordinate requirements for blocking, anchors, and supports needed for proper installation of products. Provide necessary components whether or not indicated on Drawings or specified.

E. Finished surfaces: Coordinate locations of fixtures, boxes, and other recessed or surface mounted items with finish elements and grades to ensure proper installation and neat appearance.

3.2 COORDINATION WITH INSTALLED CONSTRUCTION

A. Openings made in installed exterior surfaces shall be closed to protect construction from weather and extremes of temperature and humidity.

B. Cutting and patching of installed construction shall be accomplished in accordance with Section 01 73 00 - Execution Requirements.

C. Remove, cut, and patch previously installed construction in a manner to minimize damage and to provide a means of restoring finishes to original or better condition.

D. Where refinishing is required, provide a neat transition to adjacent surfaces.

E. Patched work shall match existing adjacent work in texture and appearance.

END OF SECTION

CADD LICENSE AGREEMENT FOLLOWS

CADD DATABASE LICENSE, INDEMNITY AND WARRANTY AGREEMENT

PROJECT: RIO RANCHO SENIOIR CENTER

LICENSE

1.1 LICENSE GRANT: Contractor is granted use of the CADD Database for the indicated project for the specific purpose of preparing submittal documents for this Project. No other use of the CADD Database is granted. Title to the CADD Database is not transferred to the Contractor.

1.2 COPYING RESTRICTIONS: Contractor may copy the CADD Database in whole or in part, but only for backup and archival purposes and for use by the Contractor's Subcontractors. Contractor agrees to ensure that any entities who receive a copy of the CADD Database from Contractor, either in whole or in part, comply with the terms and conditions of this agreement.

1.3 TRANSFER OF CADD DATABASE: Contractor to safeguard the CADD Database from falling into the hands of any parties other than those indicated in Section 1.2 of this Agreement.

WARRANTY

2.1 DATABASE WARRANTY: Architect disclaims all warranties with regard to the database, including all implied warranties of fitness. Architect disclaims all obligations or liabilities for damages, including but not limited to, consequential damages arising out of or in connection with the use, accuracy or performance of the database.

INDEMNITY

3.1 INDEMNITY: Contractor recognizes that the use of the database will be at the Contractor's sole risk and without any liability, risk or legal exposure by the architect. It shall be the Contractor's sole responsibility to verify dimensions in the drawings prior to using these database files for his intended purpose. Furthermore, the Contractor shall, to the fullest extent permitted by law, defend, indemnify and hold harmless the architect from all claims, damages, losses, and attorney fees arising out of or resulting from the use of the database.

ACKNOWLEDGMENT

4.1 ACKNOWLEDGMENT: The Contractor acknowledges that (s)he has read this Agreement, understands it, and agrees to be bound by its terms and conditions.

CONTRACTOR'S REPRESENTATIVE

Signature: _____ Company Name: _____

Name: _____ Address 1: _____

Title: _____ Address 2: _____

Date: _____

SECTION 01 33 00

SUBMITTAL PROCEDURES

PART 1 - GENERAL

1.1 SUMMARY

A. Section includes submittal procedures for:

1. Shop drawings.
2. Product data.
3. Samples.
4. Manufacturer's instructions.
5. Design data and calculations.
6. Manufacturer's certificates.
7. Reports for testing, inspecting, and demonstrating.

B. Related documents and sections:

1. General Conditions of the Contract: Contractor's responsibilities regarding submittals.
2. Section 01 20 00 - Price and Payment Procedures: Submittal of Schedule of Values and Applications for Payment.
3. Section 01 25 13 - Product Substitution Procedures: Submittal of substitution requests.
4. Section 01 31 00 - Product Management and Coordination:
   a. Submittal of Progress Schedule and coordination drawings.
   b. Requirements for use of Architect's and Design Consultants' electronic CADD files and execution of CADD License, Indemnity, and Warranty Agreement.
5. Section 01 40 00 - Quality Requirements: Manufacturers' field services and reports.
6. Section 01 78 00 - Closeout Submittals: Submittal of project record drawings, operation and maintenance manuals, warranties, certifications of inspection, extra materials and other closeout submittals.
7. Refer to individual specification sections for unique submittal requirements related to a specific product.

C. Electronic submittals: All submittals including Submittal Transmittal Form shall be uploaded in PDF format to Project FTP Site. These shall be in addition to printed copies of submittals required by this Section.

1.2 SUBMITTAL SCHEDULE

A. Procedure:

1. Submit for review by Architect 1 printed copy and 1 PDF electronic file of Submittal Schedule within 20 days of effective date of Agreement Between Owner and Contractor.

2. Revise to address review comments and resubmit.

3. Update Submittal Schedule to reflect change orders, Progress Schedule revisions, and status of individual submittals. Submit 3 copies with each Application for Payment.

B. Format: Tabular arrangement indicating:

1. Submittal number and title.

2. Related specification section number and title.

3. Proposed submittal date, actual submittal date, and date reviewed submittal is required.

1.3 SUBMITTAL PROCEDURES

A. Schedule submittals to expedite Work. Unless otherwise noted, submittals shall be submitted within 45 days of effective date of Agreement between Owner and Contractor.

B. Preparation:

1. Provide separate submittal for each specification section requiring submittals. Include all material requested for that section. Provide folders or binders for material.

2. Coordinate submission of related items. Group submittals of related products or a system in a single transmission.

3. Coordinate submittals requiring color or pattern selection by Architect. Ensure such submittals are submitted within 45 days of effective date of Agreement between Owner and Contractor. Architect will not make color and pattern selections until all submittals requiring such selections are submitted.

4. Identify variations from requirements of Contract Documents. State product and system limitations which may adversely affect Work.

5. Mark or show dimensions and values in same units as specified.

6. Provide 4 by 6 inch minimum space for Architect and Contractor review stamps.

C. Contractor review:

1. Review submittals prior to transmittal. Verify compatibility with field conditions and dimensions, product selections and designations, and conformance of submittal with requirements of Contract Documents. Return non-conforming submittals to preparer for revision rather than submitting to Architect.

2. Coordinate submittals to avoid conflicts between various items of work.

3. Apply Contractor's stamp with signature certifying that review, verification of products required, field dimensions, adjacent construction, and coordination of information is in accordance with the requirements of the Contract Documents.

4. Failure of Contractor to review submittals prior to transmittal to Architect shall be cause for rejection.

D. Transmittal:

1. Transmit each submittal with a separate Submittal Transmittal Form. Copy of Form follows this Section.

2. Sequentially number transmittal forms. Resubmittals shall have original number with an alphabetic suffix.

3. Identify project, Contractor, subcontractor, supplier, pertinent drawing sheet and detail numbers, and associated specification section numbers.

4. Sign Submittal Transmittal Form and deliver submittals to Architect.

E. Review: Architect will review and return submittals with comments.

F. Do not fabricate products or begin work which requires submittals until return of submittal with Architect’s acceptance.

G. On return, promptly distribute reviewed submittals to concerned parties. Instruct parties to promptly report any inability to comply with provisions.

H. Resubmission:

1. Revise and resubmit submittals as required within 15 days of return from Architect.

2. Make resubmittals under procedures specified for initial submittals.

3. Identify all changes made since previous submittal.

I. Use of CADD files: If Architect's and Design Consultants' electronic CADD files are required for preparation of submittal shop drawings, comply with requirements of Section 01 31 00 - Product Management and Coordination for use of electronic CADD files and execution of CADD License, Indemnity, and Warranty Agreement.

J. Architect and Design Consultants will review initial submittal and one resubmittal. If Contractor fails to provide required data with first resubmittal, Contractor shall be charged for Architect's and Design Consultants' time required for review of additional resubmittals at current, standard rates. Charges will be deducted from Contract Sum by Change Order.

1.4 SHOP DRAWINGS

A. Submission:

1. Submit one electronic PDF file and one paper drawing for documents up to 11 by 17 inches and two paper drawings for larger size documents. Paper drawings will be retained by Architect. Electronic shop drawing will be returned to Contractor with annotations.

2. Fold paper drawings to fit submittal folders.

B. Form:

1. Size: 8-1/2 by 11 inches minimum and 36 by 48 inches maximum except for full size details and templates.

2. Present in a clear and thorough manner. Title each drawing with Project name. Identify each element of drawing with reference number.

3. Plans, elevations, sections, and detailed shop drawings shall be to scale with scale indicated.

4. Indicate field verified dimensions. Show relationship of products to adjacent work. Note coordination requirements.

5. Schematics and wiring and other diagrams shall be logically arranged and presented in a clear understandable manner with all items labeled.

1.5 PRODUCT DATA

A. Submission: Submit one electronic PDF file plus one hard copy original to be retained by Architect.

B. Form:

1. Provide all critical information such as reference standards, performance characteristics, capacities, power requirements, wiring and piping diagrams, controls, component parts, finishes, dimensions, and required clearances.

2. Submit only data which are pertinent. Mark each copy of manufacturer's standard printed data to identify products, models, options, and other data pertinent to project.

3. Modify manufacturer's standard schematic drawings and diagrams and supplement standard data to provide specific information applicable to project. Delete information not applicable.

4. Colors and patterns: Unless color and pattern is specified for product, submit accurate color and pattern charts or samples illustrating manufacturer's full range for selection by Architect. Full color range shall be submitted as part of electronic PDF file.

1.6 SAMPLES

A. Submission:

1. Submit the number of samples specified in individual specification sections. One sample will be retained by Architect.

2. Label each sample with identification related to Submittal Transmittal Form.

3. Submit photographs of all samples in electronic PDF format.

4. Submit samples at least 30 days prior to date Contractor needs approval for ordering or incorporation into Work.

B. Type: Submit samples to illustrate functional and aesthetic characteristics of the products, with all integral parts and attachment devices. Include full range of manufacturer's standard finishes, indicating colors, textures, and patterns for Architect's selection.

C. Reviewed product samples may be used in work with approval of Architect.

1.7 MANUFACTURER'S INSTRUCTIONS

A. Submission: Submit one electronic PDF file plus one hard copy to be retained by Architect.

B. Form: All of the following items shall be included in both the electronic PDF file and hard copy.

1. Manufacturers' printed instructions for activities such as delivery, storage, assembly, installation, wiring, start-up, adjusting, finishing, and maintaining.

2. Indicate pertinent portions and identify conflicts between manufacturers' instructions and Contract Documents.

1.8 DESIGN DATA AND CALCULATIONS

A. Submission: Submit one electronic PDF file plus one hard copy to be retained by Architect.

B. Form: All of the following items shall be included in both the electronic PDF file and hard copy.

1. Provide basic calculations, analyses, and data to support design decisions and demonstrate compliance with specified requirements. State assumptions and define parameters. Give general formulas and references. Provide sketches as required to illustrate design method and application.

2. Arrange calculations and data in a logical manner with suitable text to explain procedure.

3. Indicate name, title, and telephone number of individual performing design and include professional seal of designer where applicable or required.

1.9 MANUFACTURERS' CERTIFICATES

A. Submission: Submit one electronic PDF file plus one hard copy to be retained by Architect.

B. Form:

1. Certificates shall indicate that products conform to or exceed specified requirements. Submit supporting reference data, affidavits, and certifications as required.

2. Certificates may be based on recent or previous test results if acceptable to Architect.

1.10 REPORTS

A. Submission:

1. Submit one electronic PDF file plus one hard copy to be retained by Architect.

2. Submit reports within 15 days after completion of activity.

B. Form:

1. Present complete information in a clear concise manner.

2. Type or computer print on 8-1/2 by 11 inch white paper.

3. Bind with titled cover in folder, plastic binder, or three-ring binder as appropriate for quantity of material.

C. Reports shall include: All of the following items shall be included in both the electronic PDF file and hard copy.

a. Time, location, conditions, and duration of activity.

b. Names of persons performing and witnessing activity.

c. Equipment used.

d. Description of activity, data recorded, and results.

e. Deficiencies found, corrective measures, and results of retesting.

f. Other pertinent data.

PART 2 - PRODUCTS

Not used.

PART 3 - EXECUTION

Not Used.

END OF SECTION

SUBMITTAL TRANSMITTAL FORM

The undersigned, as Contractor for the above project, submits the following and certifies that submittal has been reviewed and it conforms with requirements of Contract Documents except as noted.

SUBMITTAL NUMBER:_____ _____RESUBMITTAL: YES NO

DATE:_____NUMBER OF COPIES SUBMITTED: _____

DESCRIPTION:_____

ASSOCIATED SPECIFICATION SECTION NO:_____

REFERENCED DRAWING SHEET NO:_____

NAME OF SUBCONTRACTOR/SUPPLIER:_____

_____

SUBMITTED
BY:_____DATE:_____

SIGNATURE: _____

* *

DATE RECEIVED BY ARCHITECT: _____

DISTRIBUTED TO:

OWNER CIVIL LANDSCAPE STRUCTURAL MECHANICAL ELECTRICAL

OTHER: _____

* *

ACTION: No exceptions taken _____
Make corrections noted _____
Revise and resubmit _____
Rejected _____

COMMENTS: _____

_____

Submittal review corrections and comments by Architect do not relieve Contractor from compliance with Contract Documents. Review is only for general conformance with design concept and general compliance with information given in Contract Documents. Contractor is responsible for verifying dimensions, selecting fabrication processes and techniques of construction, coordination with other trades, and performing work in safe and satisfactory manner.

REVIEWED BY:_____DATE:_____

SIGNATURE: _____

SECTION 01 40 00

QUALITY REQUIREMENTS

PART 1 - GENERAL

1.1 SUMMARY

A. Section includes:

1. Installation quality control.
2. Reference standards.
3. Mock-ups.
4. Field samples.
5. Inspection and testing laboratory services.
6. Special inspections as required by ICC IBC.
7. Manufacturer's field services and reports.

B. Related requirements:

1. General Conditions of the Contract:
   a. Owner's responsibilities for testing and inspections.
   b. Contractor's supervision and construction procedures.
   c. Contractor's responsibility for uncovering and correction of work.
   d. Contractor's responsibilities for testing and inspections.
3. Section 01 60 00 - Product Requirements: Requirements for material and product quality.
4. Section 23 05 93 - Testing, Adjusting, and Balancing of Mechanical Systems.

1.2 INSTALLATION QUALITY CONTROL

A. Monitor and maintain quality control over manufacturers, suppliers, subcontractors, work force, site conditions, products, and services to ensure Work is of specified, consistent quality.

B. Workmanship:

1. Specified requirements represent a minimum acceptable quality for Work. Comply with industry standards except when more stringent specified requirements and tolerances indicate higher standards or more precise workmanship.
2. Perform work with suitable qualified personnel to produce work of specified quality.

3. Secure products in place with positive anchorage devices designed and sized to withstand stresses, vibration, and distortion.

C. Manufacturer's instructions:

1. Comply fully with manufacturer's instructions. Perform steps in manufacturer's recommended sequence.

2. Should instructions conflict with Contract Documents, request clarification from Architect before proceeding.

1.3 REFERENCE STANDARDS

A. When specifications require conformance to a reference standard, applicable standard shall be the edition current at date of receiving bids.

B. Should specified reference standard conflict with Contract Documents, request clarification from Architect.

C. Contractual relationship, duties, and responsibilities of the parties to the Contract or those of Architect shall not be altered from that stated in the Contract Documents by mention or inference to the contrary in a specified reference standard.

1.4 MOCK-UPS

A. When required by an individual specification section, construct mock-up of construction component or assembly for review by Architect, testing, and demonstration.

B. Assemble and erect mock-up with specified attachments, anchorage devices, flashings, seals, and finishes.

C. Perform tests as specified in section requiring mock-up. Submit report in accordance with Section 01 33 00 - Submittal Procedures.

D. Mock-up accepted by Architect shall represent quality level for that item of work.

E. After acceptance and use as quality standard, completely remove mock-up and clean area.

1.5 FIELD SAMPLES

A. When required by an individual specification section, install field samples for review by Architect.

B. Acceptable installed sample shall remain as part of Work and shall represent quality level for that item of work. Unacceptable sample shall be removed and replaced, repaired, or refinished as directed by Architect.

1.6 INSPECTION AND TESTING LABORATORY SERVICES

A. Contractor shall make arrangements, bear costs, and employ an independent firm acceptable to Owner to perform inspections and compliance testing for the following items and materials of construction.

1. Geotechnical testing and analysis including soil testing and compaction.

2. Asphalt paving.

3. Concrete testing including slump analysis, forming test cylinders, and compression testing.

4. Other materials, components, and systems where testing is specified in individual specification sections.

5. Test, inspections, and approvals of portions of Work required by laws, ordinances, rules, regulations, or orders of public authorities having jurisdiction.

6. Additional testing required by correction of non-conforming work.

B. Contractor shall make arrangements, bear costs, and employ an independent firm acceptable to Owner and Architect to perform testing and balancing of heating and air-conditioning systems as specified in Section 23 05 93 - Testing, Adjusting, and Balancing of Mechanical Systems.

1. Contractor shall be responsible for timely, diligent, and coordinated corrections to Work required until performance is compliant with Contract Documents.

C. Testing firm shall submit directly to Architect 1 copy of reports indicating observations and results of inspections and tests with indication of compliance or non-compliance with Contract Documents. PDF files shall be provided to Architect and City Project Manager.

D. Contractor's responsibilities:

1. Cooperate with testing firm and furnish materials and other products to be tested. Provide assistance in accessing and obtaining samples. Provide storage for samples and testing equipment.

2. Notify Architect 2 days prior to operations requiring testing services.

3. Make arrangements with testing firm and pay for additional samples and tests required for Contractor's use.

4. Retesting required when tests indicate non-conformance to specified requirements shall be performed by original testing firm and paid for by Contractor.

1.7 SPECIAL INSPECTIONS

A. Owner will make arrangements, bear costs, and employ an independent firm to perform special inspections as required by ICC IBC for the following:

1. Earthwork.
2. Reinforcement for cast concrete.
3. Structural metal framing.
4. Welding.
5. High strength bolts.
6. Other inspections indicated on Drawings or as required by ICC IBC.

B. Contractor shall cooperate with inspection firm and provide assistance in accessing and inspecting Work.

1.8 MANUFACTURER'S FIELD SERVICES AND REPORTS

A. When required by an individual specification section, provide services of manufacturer's field representative to observe site conditions, installation, quality of workmanship, starting of equipment, testing and adjusting equipment, and as applicable, to instruct and supervise field operations.

B. Submit qualifications of manufacturer's field representative to Architect for approval 15 days in advance of required observation.

C. Manufacturer's field representatives shall report observations, site decisions, and instructions given to installers that are supplemental or contrary to manufacturer's written instructions.

D. Submit report of field representative to Architect and City Project Manager within 30 days of observation and in accordance with Section 01 33 00 - Submittal Procedures.

PART 2 - PRODUCTS

Not used.

PART 3 - EXECUTION

Not used.

END OF SECTION

SECTION 01 50 00

TEMPORARY FACILITIES AND CONTROLS

PART 1 - GENERAL

1.1 SUMMARY

A. Section includes:

1. Site Mobilization and Site Safety Plans.
2. Temporary services: Electrical, lighting, heating, ventilating, water, telephone, and facsimile.
3. Fencing, barriers, and other temporary controls.
4. Construction facilities: Temporary buildings, sanitary facilities, access, and parking.
5. Protection of Work and existing facilities.
6. Project sign.
7. Bulletin board.

B. Related documents and sections:

1. General Conditions of the Contract:
   a. Contractor's responsibility for cleaning.
   b. Safety precautions and programs.
2. Section 01 73 00 - Execution Requirements: Progress cleaning.

1.2 REFERENCES

A. NFPA 10 - Standard for Portable Fire Extinguishers.

B. NFPA 241 - Safeguarding Building Construction, Alterations, and Demolition Operations.

1.3 SITE MOBILIZATION AND SAFETY PLANS

A. Coordinate locations for temporary facilities with Architect.

B. Prepare site mobilization plan showing:

1. Field office.
2. Storage and staging areas, sheds, and temporary fencing.
3. Project identification sign.
4. Access routes.

5. Temporary utility routes and connections.

6. Sanitary facilities.

7. Trash and rubbish receptacles.

8. Parking arrangements.

9. Existing site improvements to remain and be protected from construction operations.

C. Present 3 copies of plan at Pre-Construction Conference in accordance with Section 01 31 00 - Project Management and Coordination.

D. Prior to mobilization, revise and resubmit to Architect Site Mobilization Plan incorporating final revisions made at Pre-Construction Conference and approved by Architect and Owner.

1.4 TEMPORARY ELECTRICITY

A. Provide and pay for electricity used during construction. Provide service disconnect and overcurrent protection. Provide temporary feeder as required.

B. Provide power outlets for construction operations with branch wiring, distribution boxes, and flexible power cords as required.

C. Provide portable generator or other power source for welding operations.

1.5 TEMPORARY LIGHTING

A. Provide lighting for construction operations. Lighting levels shall be appropriate for type and difficulty of work. Use these minimums as guidelines:

1. 200 footcandles: Intricate assembly, very fine finishing, and very difficult inspection.

2. 100 footcandles: Detailed assembly, fine finishing, and difficult assembly.

3. 50 footcandles: Rough assembly and fabrication, ordinary finishing, and ordinary inspection.

4. 20 footcandles: Egress and circulation lighting.

B. After dark, provide security lighting for interior and exterior work and storage areas.

C. Provide branch wiring from power source to distribution boxes with lighting conductors, pigtails, and lamps as required.

D. Maintain lighting and provide routine repairs.

E. Permanent building lighting may be utilized during construction.

1.6 TEMPORARY HEATING AND VENTILATING

A. Ventilate enclosed areas to assist cure of materials, to dissipate humidity, and to prevent accumulation of dust, fumes, vapors, and gases.

B. Provide temporary fan units to maintain clean air for construction operations.

C. Maintain minimum ambient temperature of 50 degrees F in interior areas where construction is in progress.

D. Provide and pay for supplemental heating devices and energy needed to maintain specified conditions.

1.7 TEMPORARY WATER SERVICE

A. Provide temporary water service for construction operations. Contractor shall pay cost of water used. Exercise measures to conserve water.

B. Assume responsibility for temporary connections and water lines. Upon completion, remove temporary facilities.

1.8 COMMUNICATIONS

A. Provide, maintain, and pay for telephone, facsimile, and Internet service to field office.

1.9 ACCESS

A. Refer to Drawings for location of acceptable access routes.

B. Identify access to Contractor's work and office area with appropriate signs so that delivery personnel and others may contact Contractor.

C. Prevent unauthorized personnel from entering construction areas.

1.10 FENCING

A. Provide temporary fencing around new building construction and materials storage areas as indicated on Drawings.

B. Type: Panelized 6 foot high commercial grade chain link fence.

C. Equip with vehicular and pedestrian gates with locks.

1.11 BARRIERS AND PROTECTION

A. Security: Provide to protect construction and storage and staging areas from unauthorized entry, vandalism, and theft. Coordinate with Owner's security program and personnel.

B. Site shall be protected and maintained clean and free of debris. Do not wash concrete trucks or allow dumping of excavated material, concrete, asphalt, gravel, oil, solvents, and other construction waste on site.

C. Barriers: Provide barriers to prevent unauthorized entry to construction areas.

D. Enclosures: Provide temporary, weather tight closures on exterior openings in new building to provide acceptable working conditions, protect Work, and prevent unauthorized entry. Fit with self-closing, lockable doors.

E. Emergency exits shall be maintained during construction.

F. Protect existing trees, plants, and other landscaping designated to remain. Replace plant material damaged by construction activities.

1.12 PROTECTION OF INSTALLED WORK

A. Protect installed Work.

B. Provide temporary and removable protection for installed products.

C. Protect finished floors and other surfaces from traffic, dirt, wear, and movement of heavy objects with durable sheet materials.

D. Prohibit traffic and storage on roof surfaces and landscaped areas.

1.13 TEMPORARY FIRE PROTECTION

A. Install and maintain temporary fire protection components. Establish and follow procedures to protect against fire losses. Comply with NFPA 241.

B. Fire extinguishers: Provide hand carried, portable, UL rated fire extinguishers of type and size recommended by NFPA 10 for building exposure conditions. Place in accessible, convenient locations in clear view.

C. Access: Maintain unobstructed access to fire hydrants, water supply, fire extinguishers, stairways, and access routes for fighting fires.

D. Heating devices: Exercise care and monitor use of temporary heaters to minimize fire risk.

E. Store combustible materials in fire-safe containers.

F. Volatile products: Do not store paints, varnishes, paint removers, solvents, adhesives, cleaning rags, and other volatile products in building. Take precautionary measures to prevent fire hazards and spontaneous combustion.

G. Cutting and welding: Approve in advance use of open flame cutting, welding, and soldering equipment. Ensure that safe conditions exist before granting approval.

1.14 FIELD FACILITIES

A. Provide and maintain a weathertight field office equipped with tables and chairs to accommodate up to 10 people for site meetings. Provide work station for use of Architect during field inspections.

B. Coordinate Work force parking arrangements with Owner.

C. Provide and maintain storage sheds and other facilities as required.

1.15 TEMPORARY SANITARY FACILITIES

A. Provide and maintain required sanitary facilities for work force.

B. New toilet facilities shall not be used by work force.

1.16 PROJECT SIGN

A. Furnish project sign and erect on site at location designated by Architect.

B. Construction: 4 by 8 feet constructed of 3/4 inch exterior plywood mounted to 4 by 6 inch treated wood posts.

C. Sign shall be prepared by professional sign painter using either painted exhibit lettering or die cut adhesive applied letters.

D. Design, style and size of lettering, color, and text shall be as provided by Architect.

E. Allow no other signs to be displayed without approval of Architect and Owner.

1.17 BULLETIN BOARD

A. Furnish and maintain bulletin board adjacent to field office. Display the following throughout construction period:

1. State wage rates.

2. Safety requirements.

3. List of emergency contacts, procedures, and information.

4. Official notices and announcements.

1.18 REMOVAL OF UTILITIES, FACILITIES, AND CONTROLS

A. Remove temporary above grade and buried utilities, equipment, facilities, and excess materials prior to final inspection.

B. Clean and repair damage caused by installation of temporary facilities.

PART 2 - PRODUCTS

Not used.

PART 3 - EXECUTION

Not used.

END OF SECTION

SECTION 01 60 00

PRODUCT REQUIREMENTS

PART 1 - GENERAL

1.1 SUMMARY

A. Section includes:

1. General product requirements.
2. Transportation and handling.
3. Storage and protection of products.

B. Related sections:

1. Section 01 10 00 - Summary: Definitions for "products", "supply", "furnish", "provide", and "execution".
2. Section 01 25 13 - Product Substitution Procedures: Procedures for requesting use of unspecified products.
3. Section 01 40 00 - Quality Requirements: Product quality monitoring.

1.2 GENERAL PRODUCT REQUIREMENTS

A. Products shall be new and currently in production.

B. Do not use products removed from other facilities except where use of salvaged products is required in Contract Documents.

C. Products of the same category shall be products of a single manufacturer. Where possible, products under a single specification section shall be of the same manufacturer.

D. Asbestos and lead containing materials shall not be used or incorporated in Work.

1.3 TRANSPORTATION AND HANDLING

A. Transport and handle products in accordance with manufacturer's instructions.

B. Promptly inspect shipments to ensure that products comply with requirements, quantities are correct, and products are undamaged.

C. Provide equipment and personnel to handle products by methods to prevent soiling, disfigurement, and damage.

D. Deliver packaged products in unopened and undamaged cartons and wrappings.

1.4 STORAGE AND PROTECTION

A. Store and protect products in accordance with manufacturer's instructions, with seals and labels intact and legible. Store sensitive products in weather-tight, climate controlled enclosures.

B. For exterior storage of fabricated products, place on supports above ground, sloped to drain.

C. Cover products subject to deterioration with impervious sheet covering. Provide ventilation to avoid condensation.

D. Store loose granular materials on solid flat surfaces in a well-drained area. Prevent mixing with foreign matter.

E. Arrange storage of products to permit access for inspection. Periodically inspect to ensure products are undamaged and are maintained under specified conditions.

PART 2 - PRODUCTS

Not used.

PART 3 - EXECUTION

Not used.

END OF SECTION

SECTION 01 73 00

EXECUTION REQUIREMENTS

PART 1 - GENERAL

1.1 SUMMARY

A. Section includes:

1. Basic requirements for examination, preparation, and installation.
2. Requirements and limitations for cutting and patching incidental to work and required to make several parts fit together.
3. Progress cleaning.

B. Related documents and sections:

1. General Conditions of the Contract:
   a. Contractor's responsibilities regarding cutting and patching operations.
   b. Uncovering and correction of work.
2. Section 01 50 00 - Temporary Facilities and Controls: Temporary barriers and enclosures.
3. Section 01 77 00 - Closeout Procedures: Final cleaning.
4. Section 07 92 00 - Joint Sealants: Sealing of conduits, piping, and other items penetrating structure.

1.2 SUBMITTALS

A. Cutting request:

1. Submit advance written request to Architect prior to cutting or other alteration which affects:
   a. Structural integrity of an element.
   b. Integrity of weather-exposed or moisture-resistant element.
   c. Operation, efficiency, maintenance, or safety of an element.
   d. Visual qualities of exposed elements.
   e. Work of others under separate contract to Owner.
2. Include in request:
   a. Project and Contractor identification.
   b. Location and description of proposed work.
   c. Necessity for cutting or alteration and alternatives to cutting and patching.

d. Effect on work of this Contract, existing construction, and work of others under separate contract to Owner.

e. Date work will be executed.

1.3 LOCATION OF UNDERGROUND UTILITIES

A. Contractor shall arrange for all spotting of underground lines by utility companies in advance of excavation work.

PART 2 - PRODUCTS

2.1 MATERIALS

A. Asphalt materials for repair and replacement: Comply with City of Rio Rancho Standard Specifications.

B. Other patching and replacement materials: Those used for original installation.

C. Product substitutions: For any proposed change in patching materials, submit request for substitution in accordance with Section 01 25 13 - Product Substitution Procedures.

PART 3 - EXECUTION

3.1 EXAMINATION

A. Prior to commencing a portion of Work:

1. Verify that existing site conditions and substrate surfaces are acceptable for subsequent Work.

2. Verify that existing substrate is capable of structural attachment of new Work being applied or attached and that required blocking is in place.

3. Verify that existing substrate is compatible with, properly prepared, and otherwise ready to receive subsequent applications and finishes. Ensure that existing conditions conform to requirements of manufacturers of products to be applied.

4. Verify that utility services are available, of correct characteristics, and in correct location.

B. Prior to commencing removals and cutting and patching, inspect existing building systems and elements subject to damage or movement during subsequent operations.

C. Prior to commencing cutting and patching, inspect existing systems and elements subject to damage or movement during subsequent operations. Document and report existing damage.

D. Beginning of cutting, patching, and new Work implies acceptance of existing conditions.

3.2 PREPARATION

A. Clean substrate surfaces prior to applying next material or substance.

B. Seal cracks and openings in substrate prior to applying next material or substance.

C. Apply manufacturer required substrate primer, sealer, and conditioner prior to applying new material or substance to substrate.

3.3 INSTALLATION

A. Install, construct, erect, assemble, and apply products in accordance with manufacturer's recommendations and instructions and specified requirements. Where manufacturer's instructions conflict with specifications, notify Architect. Do not proceed until clarification is received.

B. Install products secure, rigid, plumb, and level within specified or industry acceptable tolerances.

C. Remove excess materials such as adhesive, grout, mortar, and sealants from finished surfaces in a manner which does not stain, corrode, disfigure, or otherwise damage finished surface.

D. Adjust working parts for smooth, proper operation.

E. Replace deformed, scratched, cracked, broken, or otherwise damaged products as result of installation.

F. After installation is complete, protect installed products and finished surfaces from subsequent construction operations in accordance with Section 01 50 00 - Temporary Facilities and Controls. Replace or repair subsequently damaged products and surfaces.

G. Clean and maintain installed products in accordance with manufacturer's recommendations and specifications until Substantial Completion.

3.4 CUTTING AND PATCHING

A. Execute cutting, fitting, patching, excavation, and fill as required to:

1. Install new work into existing construction.

2. Fit products together and to integrate them with other work.

3. Uncover work to execute ill-timed work.

4. Remove and replace defective and non-conforming work.

5. Remove samples of installed work for testing.

6. Provide openings for penetrations of mechanical, electrical, and other work.

B. Provide temporary supports to ensure structural integrity. Provide devices and methods to protect other portions of Project from damage.

C. Provide protection from elements for areas which may be exposed by cutting operations.

D. Method: Execute work by methods to avoid damage to other work and which will provide appropriate surfaces to receive patching and finishing.

E. Cutting:

1. Cut rigid materials using masonry saw or core drill. Pneumatic tools are not allowed without prior approval.

2. Size openings to exactly fit penetrating item plus allowance for sealant. Form edges of hole even and smooth.

3. Drill penetrations through concrete for conduit and piping.

4. Drill round holes and saw cut rectangular openings in concrete unit masonry units. Where block is broken or chipped in process, remove complete face of exposed block and replace with partial block.

F. Patching:

1. Restore work with new products meeting requirements of Contract Documents.

2. Fit work tight to pipes, sleeves, ducts, conduits, and other elements penetrating surfaces.

3. At penetrations of fire rated walls, partitions, ceilings, and floors, completely seal voids with fire-resistant material, in accordance with Section 07 92 00 - Joint Sealants, to full thickness of penetrated element.

G. Finishing: Refinish surfaces to match adjacent finish. For continuous surfaces, refinish to nearest intersection or natural break. For an assembly, refinish entire unit.

H. Repair: Contractor shall be responsible for repair and restoration of existing telecommunications, data, security, HVAC controls, and fire alarm systems to conditions documented as existing prior to commencement of work.

3.5 ASPHALT PAVEMENT

A. Where existing or new pavement is damaged from construction operations, cut to install new underground utilities and where existing items are removed from paved areas:

1. Cut, patch, replace, and repair asphalt pavement in accordance with City of Rio Rancho Standard Specifications.

2. Cut pavement with saw or other means to provide neat, straight joints.

3. Where existing pavement is damaged by removals, remove additional pavement to allow clean cuts.

4. Backfill and sufficiently compact removal area prior to placement of pavement.

5. Place pavement to match existing materials and thicknesses.

B. Immediately after placement, protect new pavement from mechanical damage.

3.6 ROOF PENETRATIONS

A. Schedule roof penetrations prior to installation of roof membrane.

B. Coordinate roof penetrations such that operations do not void roof warranty.

3.7 PROGRESS CLEANING

A. Maintain areas free of waste materials, debris, and rubbish. Maintain site in a clean and orderly condition.

B. Remove waste materials, debris, and rubbish from site weekly and legally dispose of off-site.

C. Remove debris and rubbish from pipe chases, plenums, crawl spaces, above suspended ceilings, and other closed and remote spaces prior to enclosing space.

D. Prior to surface finishing, broom and vacuum clean interior areas to eliminate dust.

E. Washing of concrete trucks and dumping of excess cementitious material on site is not allowed. All such materials and contaminated soil shall be removed.

F. Soils and other site material contaminated by paint residues, oils, fuels, and other construction products shall be removed and replaced with equivalent soil or material.

G. Areas for future landscaping affected by construction operations shall be raked to remove stones, mortars, aggregates, and other construction debris in excess of 3/4 inch diameter.

H. Clean mud and sediment resulting from construction operations and traffic from all sidewalks, public street, and parking areas.

END OF SECTION

SECTION 01 75 00

STARTING AND ADJUSTING

PART 1 - GENERAL

1.1 SUMMARY

A. Section includes: General procedures for starting, monitoring, and adjusting items of equipment and complete systems other than HVAC, building automation, and electrical systems.

B. Related sections:

C. Section 01 78 00 - Closeout Submittals: Operation and maintenance manuals.

D. Section 23 05 93 - Testing, Adjusting, and Balancing for HVAC.

PART 2- PRODUCTS

Not used.

PART 3 - EXECUTION

3.1 SCHEDULING

A. Coordinate schedule for starting of systems and equipment to ensure proper sequencing.

B. Notify Architect 7 days prior to startup of each system.

3.2 PREPARATION

A. Prior to startup, inspect items of equipment and systems to ensure that:

1. Installation is in accordance with manufacturer's instructions.

2. No defective items have been installed and there are no loose connections.

3. Power supplies are correct voltage, phasing, and frequency.

4. Grounding and transient protection systems are properly installed.

5. Items have been properly lubricated, belts tensioned, and control sequence and other conditions which may cause damage have been addressed.

B. Verify that system wiring has been tested.

C. Verify that provisions have been made for safety of personnel.

3.3 STARTING OF SYSTEMS

A. Starting operations shall comply with 2009 New Mexico Energy Conservation Code and IECC commissioning requirements.

B. Execute starting under supervision of responsible personnel in accordance with manufacturer's instructions.

C. When specified in individual sections, require manufacturer to provide authorized representative to be present at site to inspect, check, and approve equipment and system installation prior to startup and to supervise placing equipment and system in operation.

D. Adjustment: Monitor systems and verify performance. Correct deficiencies. Replace defective components and equipment. Adjust equipment and systems for smooth and proper installation.

E. Submit written report in accordance with Section 01 33 00 - Submittal Procedures that equipment and systems have been properly installed and are functioning correctly.

END OF SECTION

SECTION 01 77 00

CLOSEOUT PROCEDURES

PART 1 - GENERAL

1.1 SUMMARY

A. Section includes:

1. Closeout procedures.
2. Final cleaning.
3. Final inspection.
4. Inspection held immediately prior to end of one year correction period.

B. Related documents and sections:

1. Section 01 73 00 - Execution Requirements: Progress cleaning.
2. Section 01 78 00 - Closeout Submittals: Submittal of project record documents, operation and maintenance manuals, warranties, certificates of inspection, extra materials, and keys.

1.2 SUBSTANTIAL COMPLETION PROCEDURES

A. Prior to or in conjunction with submission of Notice of Substantial Completion, submit the following items specified in Section 01 78 00 - Closeout Submittals:

1. Project record documents.
2. Operation and maintenance data and manuals.
3. Warranties.
4. Certificates of inspection.
5. Insurance information.
6. Extra materials.
7. Keys.

B. Comply with General Conditions of the Contract for issuance of Certificate of Substantial Completion. When Work is sufficiently complete:

1. Inspect Work and prepare comprehensive list of items to be completed or corrected.
2. Perform final cleaning of portions of Work for which approval of substantial completion is being requested.

3. Submit 3 copies of Notice of Substantial Completion and comprehensive list of items to be completed to Architect. Indicate portions of Work suitable for Owner occupancy and for which approval of substantial completion is being requested.

4. Submit Application for Payment in accordance with Section 01 20 00 - Price and Payment Procedures.

C. Prior to or in conjunction with submission of Notice of Substantial Completion, submit the following items specified in Section 01 78 00 - Closeout Submittals:

1. Project record documents.

2. Warranties.

3. Certificates of inspection.

4. Certified survey.

5. Extra materials.

6. Keys.

D. After inspection by Architect and issuance of Certificate of Substantial Completion, Owner will occupy all of Project for installation of equipment and furnishings.

E. If Architect determines work is not substantially complete:

1. Contractor will be notified of items to be completed to order to achieve Substantial Completion.

2. Contractor shall call for inspection when these items are completed.

1.3 FINAL COMPLETION PROCEDURES

A. Perform final cleaning as specified in Paragraph 1.4.

B. Submit Notice of Final Completion as PDF and one copy certifying that Contract Documents have been reviewed, work has been inspected, and that Work is complete in accordance with Contract Documents and ready for Architect's inspection.

C. Remove temporary utilities, controls, and facilities in accordance with Section 01 50 00 - Temporary Facilities and Controls.

D. Request final inspection by Architect and Owner.

1.4 FINAL CLEANING

A. Execute final cleaning prior to final inspection.

B. Clean interior and exterior surfaces exposed to view; remove temporary labels, stains and foreign substances; polish transparent and glossy surfaces; and vacuum carpeted and soft surfaces.

C. Sanitize equipment and fixtures.

D. Clean or replace filters of operating equipment.

E. Clear debris from roof, gutters and drainage systems, ceiling spaces, plenums, storage areas, and interior spaces.

F. Clean site, sweep paved areas, and rake landscaped areas and other ground surfaces.

G. Remove waste and surplus materials, rubbish, and construction facilities from the site. Dispose of legally.

1.5 FINAL INSPECTION

A. Architect and Owner's representative will make inspection within 7 days of receipt of Certification of Final Completion. Separate inspections shall be conducted for each Phase.

B. If Work is incomplete or defective:

1. Architect will provide Contractor written list of deficiencies.

2. Contractor shall immediately correct deficiencies and submit certification that Work is complete.

3. Architect and Owner's representative will re-inspect Work.

4. Re-inspection fees: Should Architect be required to make subsequent inspections to determine if punch list items are completed, Owner will withhold from Contractor's final payment an amount based on Architect's current fee schedule, including applicable miscellaneous expenses, so that Owner may reimburse Architect for such subsequent inspections.

1.6 CORRECTION PERIOD INSPECTION

A. 30 days prior to end of one year correction period, schedule and attend a one year correction period inspection. Appropriate subcontractors shall attend.

B. Coordinate time of inspection with Architect.

C. Representatives of Owner, Architect, and appropriate consultants will attend.

D. Correct deficiencies noted.

PART 2 - PRODUCTS

Not Used.

PART 3 - EXECUTION

Not Used.

END OF SECTION

SECTION 01 78 00

CLOSEOUT SUBMITTALS

PART 1 - GENERAL

1.1 SUMMARY

A. Section includes procedures for preparing and submitting closeout submittals:

1. Project Record Documents.
2. Operation and maintenance manuals and data.
3. Warranties.
4. Insurance information.
5. Certificates of inspection.
6. Record survey for certification by Project Civil Design Engineer.
7. Maintenance tools.
8. Extra materials.
9. Keys.

B. Related documents and sections:

1. General Conditions of the Contract:
   a. Contractor's warranty that Work is of good quality and free from defects and conforms to Contract Documents.
   b. Commencement of warranties and correction period.
   c. One year correction period for Contractor to correct defective work.
2. Section 01 20 00 - Price and Payment Procedures: Submittal of Applications of Payment.
3. Section 01 33 00 - Submittal Procedures: Submittal of shop drawings, product data, samples, installation instruction, reports and other submittals during construction prior to closeout.
4. Section 01 79 00 - Demonstration and Training: Use of operation and maintenance manuals for demonstration and training sessions.

1.2 PROJECT RECORD DOCUMENTS

A. Maintain on site, one set of the following record documents; record actual revisions to work:

1. Contract Drawings.

2. Specifications.

3. Addenda.

4. Change Orders and other modifications to the Contract.

5. Reviewed submittals.

6. ASI's and RFI's.

7. Construction photographs.

B. Store Record Documents separate from documents used for construction. Label "Project Record Documents".

C. Record information concurrent with construction progress. Use erasable colored pencil. Date all entries. Call attention to entry by circling area affected.

D. Specifications: Legibly mark and record in each section description of actual products installed, including the following:

1. Manufacturer's name and product model and number.

2. Product substitutions or alternates utilized.

3. Changes made by Addenda and modifications.

E. Contract Drawings and shop drawings: Legibly mark each item to record actual construction including:

1. Actual items of equipment and system components installed.

2. Actual locations of components and routing of piping and raceways.

3. Measured horizontal and vertical locations of underground water, sewer, irrigation, electrical, and other utilities and appurtenances, referenced to permanent surface improvements.

4. Measured locations of piping, raceways, and other items concealed in construction, referenced to visible and accessible features.

5. Field changes of dimension and detail.

6. Details not on original Contract Drawings.

F. Documents will be reviewed by Architect at each submittal of Application for Payment to ensure that entries are current.

G. Submit documents to Architect prior to or in conjunction with submission of Notice of Substantial Completion.

1.3 OPERATION AND MAINTENANCE DATA

A. Provide operation and maintenance data for:

1. Counter door specified in Section 08 33 14 - Coiling Counter Door.

2. Motorized doors specified in Section 08 42 30 - Automatic Entrance Doors.

3. Hardware specified in Section 08 71 00 - Door Hardware.

4. Motorized operable partitions specified in Section 10 22 20 - Operable Partitions.

5. Appliances and kitchen equipment specified in Section 11 40 00 - Food Service Equipment.

6. Mechanical equipment, systems, and controls specified in Division 23 - Heating, Ventilating, and Air-Conditioning (HVAC).

7. Electrical equipment, systems, and controls specified in Division 26 - Electrical.

9. Other equipment and systems for which operation and maintenance data is requested in individual specification sections.

B. Submission:

1. Submit data to Architect in one or more binders plus PDF format.

2. Submit for review one draft copy 30 days prior to need date or as otherwise specified. This copy will be returned after review with Architect's comments. Revise content as required.

3. Once approved, submit 2 copies of final operation and maintenance manuals. All manuals shall be submitted prior to or in conjunction with Notice of Substantial Completion.

C. Contents:

1. Appropriate design criteria.

2. Equipment and parts lists.

3. Operating instructions.

4. Maintenance instruction for equipment and finishes.

5. Shop drawings and product data.

6. Testing, balancing, and other field quality reports.

7. Copies of warranties.

8. Other material and information as indicated in individual specification sections and as necessary for operation and maintenance by Owner's personnel.

D. Form:

1. Manuals shall be 8-1/2 x 11 inch text pages bound in three ring expansion binders with a hard durable plastic cover. All documents to be originals unless otherwise noted.

2. Prepare binder covers with printed subject title of manual, title of project, date, and volume number when multiple binders are required. Printing shall be on face and spine.

3. Internally subdivide the binder contents with divider sheets with typed tab titles under reinforced plastic tabs. Place dividers at beginning of each chapter, part, section, and appendix.

4. Provide a table of contents for each volume.

5. Provide directory listing as appropriate with names addresses, and telephone numbers of Architect, Contractor, subcontractors, equipment suppliers, and nearest service representatives.

1.4 WARRANTIES

A. Provide duplicate notarized copies of special and extended warranties as required by individual specifications sections.

B. Submit warranties to Architect prior to or in conjunction with submission of Notice of Substantial Completion.

C. Execute and assemble warranties from subcontractors, suppliers, and manufacturers.

D. Provide Table of Contents and assemble in three ring binder with a hard durable plastic cover. Internally subdivide the binder contents with permanent page dividers, with tab titling clearly typed under reinforced laminated plastic tabs.

E. For items of work delayed beyond date of Substantial Completion, provide updated warranty submittal within ten days after acceptance, listing date of acceptance as start of warranty period.

1.5 CERTIFICATES OF INSPECTION

A. For inspections throughout the construction period required by regulatory agencies, obtain and maintain certificates issued to show compliance.

B. Assemble certificates in three ring binder with table of contents and submit to Architect prior to or in conjunction with submission of Notice of Substantial Completion.

C. Certificate of Occupancy: Prior to Substantial Completion, obtain from authorities having jurisdiction Certificate of Occupancy. Submit with Notice for Substantial Completion.

1.6 INSURANCE INFORMATION

A. Submit prior to or in conjunction with submission of Notice of Substantial Completion information regarding insurance including change over requirements and insurance extensions.

1.7 RECORD SURVEY

A. Provide verification of as-built topographic spot elevations and indicate any differences from Grading and Drainage Plan for use by Project Civil Design Engineer in certifying that grading and paving work complies with design.

1.8 MAINTENANCE TOOLS

A. Provide all special tools, instruments, and other implements required for the functional operation and maintenance of equipment, systems, and other components installed as part of this project. Include screw drivers, crescent wrenches, pliers, and allen wrenches as well as more unique and atypical tools.

B. Tools shall be as provided or recommended by manufacturers of installed equipment and systems. Types and sizes shall be as specifically required for installed products.

C. Tools shall be available and their use demonstrated during training sessions specified in Section 01 79 00 - Demonstration and Training.

D. Prior to or in conjunction with submission of Notice of Substantial Completion, deliver maintenance tools to Owner's representative. Prepare inventory of tools provided and obtain receipt from Owner's representative.

1.9 EXTRA MATERIALS

A. Provide spare parts and maintenance materials in quantities specified in individual sections.

B. Extra materials shall be produced by the same manufacturer of and compatible with the installed products.

C. Prior to or in conjunction with submission of Notice of Substantial Completion, deliver extra materials in unopened containers to Owner's representative at designated storage area at project site and place in location as directed. Obtain receipt from Owner's representative.

D. During one year correction period:

1. Extra materials may be used by Contractor to replace expendable and normally worn parts.

2. Extra materials used by Contractor for replacement of defective products shall be replaced at no additional cost to Owner.

1.10 KEYS

A. Prior to or in conjunction with submission of Notice of Substantial Completion, provide Owner with all keys for:

1. Door hardware locks after rekeying in accordance with Section 01 87 10 - Door Hardware.

2. Access doors and panels.

3. Electrical panelboards and other equipment.

4. Cabinet locks.

B. Provide a minimum of two keys for each lock.

C. Clearly label each key as to function and location of lock.

D. Obtain receipt from Owner's representative.

1.11 SECURITY MATERIALS AND COMPONENTS

A. Prior to Final completion, deliver to Owner and obtain receipt for all miscellaneous security related items issued or loaned to Contractor during progress of job.

PART 2 - PRODUCTS

Not Used.

PART 3 - EXECUTION

Not Used.

END OF SECTION

SECTION 01 79 00

DEMONSTRATION AND TRAINING

PART 1 - GENERAL

1.1 SUMMARY

A. Section includes: Training of Owner's designated personnel in operation and maintenance of equipment and systems.

B. Related sections:

1. Section 01 78 00 - Closeout Submittals: General requirements for operation and maintenance manuals.

1.2 SUBMITTALS

A. Provide in accordance with Section 01 33 00 - Submittal Procedures:

1. List of names and qualifications of personnel conducting training session.

2. Preliminary schedule listing times, dates, and outline showing organization and proposed contents of training session for approval by Architect and Owner.

3. Copies of training manuals and other materials to be used in training session for review by Architect and Owner.

1.3 QUALITY ASSURANCE

A. Personnel conducting demonstration and training session shall be knowledgeable of installation, operation, and maintenance of specific project equipment and systems. Where appropriate manufacturer's representatives shall conduct training.

PART 2- PRODUCTS

2.1 TRAINING MATERIALS

A. Training manuals: Loose leaf notebook format with agenda and objectives of each lesson.

1. Manuals shall describe function, operation, and maintenance of various items of equipment and be suitable for personnel with high school education.

2. Manuals shall be suitable for future training of Owner personnel by Owner staff.

3. Manuals shall be useful reference for staff maintaining facility.

B. Visual aids: Provide charts, handouts, electronic presentations, and other visual aids required to make effective presentation and facilitate training.

1. Where required by individual sections, provide audio-visual record of training and other materials for inclusion in operation and maintenance manuals.

2. Equipment needed for showing visual training aids shall be provided by Contractor.

PART 3 - EXECUTION

3.1 SCHEDULING

A. Schedule demonstration and training session after equipment and systems have been completely installed, startup completed, and adjustments made. Demonstration and training sessions shall be conducted of all items prior to substantial completion. Schedule with Architect to accommodate Owner's representatives.

3.2 DEMONSTRATION AND TRAINING

A. Provide demonstration and training session to emphasize operation, use, and maintenance of installed items and systems:

1. Counter door specified in Section 08 33 14 - Coiling Counter Door.
2. Motorized doors specified in Section 08 42 30 - Automatic Entrance Doors.
3. Hardware specified in Section 08 71 00 - Door Hardware.
4. Motorized operable partitions specified in Section 10 22 20 - Operable Partitions.
5. Appliances and kitchen equipment specified in Section 11 40 00 - Food Service Equipment.
6. Mechanical equipment, systems, and controls specified in Division 23 - Heating, Ventilating, and Air-Conditioning (HVAC).
7. Electrical equipment, systems, and controls specified in Division 26 - Electrical.
8. Landscaping specified in Section 32 80 00 - Irrigation and Section 32 90 00 - Planting.
9. Other equipment and systems requested by Owner.

B. Conduct at Project site using actual installed equipment and systems.

C. Owner shall be responsible for designating and notifying personnel to attend and ensuring attendance at scheduled sessions.

D. Plan for two training sessions consisting of 3 hours instruction with one 15 minutes break. Training sessions shall be conducted Monday through Friday during daytime hours.

E. Have copies of operation and maintenance manuals specified in Section 01 78 00 - Closeout Submittals available. Use as training aids.

F. Owner shall have right to record or video tape demonstration and training session.

END OF SECTION

SECTION 03 1100 – CONCRETE FORMWORK

PART 1 GENERAL

1.01 WORK INCLUDED

A. This section includes formwork for cast-in-place concrete, including waterstops, and installation of embedded items.

1.02 RELATED WORK SPECIFIED ELSEWHERE

A. Concrete Reinforcement - Section 03 20 00

B. Cast-In-Place Concrete - Section 03 30 00

C. Architectural Concrete Wall Finish- Section 03 35 20 – For architectural concrete formwork.

1.03 QUALITY ASSURANCE

A. Comply with the American Concrete Institute Standard, ACI 347R-94, Recommended Practice for Concrete Formwork.

1.04 REFERENCE STANDARDS

A. American Society for Testing and Materials (ASTM)

1. ASTM D 226-97a Standard Specification for Asphalt - Saturated Organic Felt used in Roofing and Waterproofing".

2. ASTM D 1751-83 Standard Specification for Preformed Expansion Joint Filler for Concrete Paving and Structural Construction (Nonextruding and Resilient Bituminous Types).

PART 2 PRODUCTS

2.01 MATERIALS

A. Forms for Exposed Finish Concrete: Refer to section 03 35 20.

B. Forms for Unexposed Finish Concrete: Use plywood, lumber, metal or other acceptable material. Provide lumber dressed on at least 2 edges and one side for tight fit.

C. Forms for Round Piers or Columns: One-piece, disposable fiber forms or approved equal.

D. Void Forms: Wax treated fiber board, 4" height, designed to resist 1000 psf pressure.

E. Form Coatings: Commercial formulation that will not bond with, stain, or adversely affect concrete surfaces, and will not impair subsequent treatments of concrete surfaces.

F. Chamfer Strips: 3/4" by 3/4" wood, PVC, or rubber.

G. Preformed Construction Joint: 24 gage steel, galvanized, shaped to form a continuous tongue and groove key.

H. Preformed Control Joint: Rigid plastic or metal strip with removable top section.

I. Expansion Joint Material: Asphalt saturated fiberboard, 1/2" thick, meeting the requirements of ASTM D 1751.

J. Felt: Asphalt-saturated organic felt, weighing 30 pounds per 100 square feet, meeting the requirements of ASTM D 226.

K. Waterstops: PVC, meeting the requirements of CRD-C572. Provide 6" wide dumbbell shape waterstop with 3/16 inch minimum web thickness and 3/8 inch minimum end bulb diameter.

PART 3 EXECUTION

3.01 COORDINATION

A. Coordinate the installation of joint materials and moisture barriers with placement of forms and reinforcing steel. Set screeds accurately. Embedded items shall be accurately aligned and adequately supported. Verify installation of mechanical, plumbing, and electrical items to be embedded in concrete. Correct any unsatisfactory condition before proceeding further.

3.02 PREPARATION

A. Form Coating: Coat contact surfaces of forms with a form-coating compound before reinforcement is placed. Thin form-coating compounds with thinning agent and apply as specified in manufacturer's instructions. Do not allow excess form-coating material to accumulate in forms or to come into contact with concrete surfaces against which fresh concrete will be placed.

3.03 INSTALLATION

A. Formwork: Formwork shall support vertical and lateral loads that are applied until such loads can be supported by concrete structure. Formwork shall be readily removable without impact, shock or damage to cast-in- place concrete surfaces and adjacent materials. Construct forms to sizes, shapes, lines and dimensions shown. Perform surveys to obtain accurate alignment. Provide for recesses, chamfers, blocking, anchorages, inserts, and other features required in work. Select materials to obtain required finishes. Butt joints solidly and provide backup at joints to prevent leakage of cement paste.

B. Form Ties: Use factory fabricated, adjustable-length, removable or snap-off metal form ties, designed to prevent form deflection and to prevent spalling concrete surfaces upon removal.

C. Cleaning and Tightening: Thoroughly clean forms and adjacent surfaces to receive concrete. Remove chips, wood, sawdust, dirt, or other debris before concrete is placed. Retighten forms and bracing after concrete placement as required to eliminate mortar leaks and maintain proper alignment.

3.04 INSTALLATION OF EMBEDDED ITEMS

A. General: Set anchorage devices and other embedded items accurately. Use setting drawings, diagrams, templates and printed instructions provided by supplier. Secure embedded items such that they are not displaced during placement of concrete.

B. Waterstops: Install according to manufacturers printed instructions. Splice waterstop sections using square cut butt joints and fuse sections together with indirect heat from preheated splicing iron. Use of direct flame is prohibited.

3.05 JOINTS

A. Construction Joints: Locate and install construction joints, which are not shown on drawings, so as not to impair strength and appearance of the structure. Place construction joints perpendicular to the main reinforcement. For exposed concrete surfaces obtain approval from architect for joint layout prior to pouring concrete. Continue reinforcement across construction joints unless noted otherwise.

B. Keyways: Provide keyways at least 1-1/2" deep in construction joints in walls and slabs.

C. Preformed Construction Joint For Slabs on Grade: Secure with galvanized steel stakes, 1/8" thick by 1-1/8 inches wide with 1/2" deep rib and tapered point. Splice adjoining joints with 24 gage steel, galvanized splice plates.

D. Isolation Joints in Slabs on Grade: Construct isolation joints in interior slabs using 30 lb. felt. Provide isolation joints at points of contact between slabs on grade and vertical surfaces, such as column pedestals, foundation walls, grade beams and elsewhere as indicated. Construct isolation joints on exterior slabs abutting vertical surfaces with 1/2" thick expansion joint material.

E. Control Joints in Slabs-on-Grade:

1. Preformed Strip: Insert premolded rigid plastic, or metal strip into fresh concrete. Cut groove for strip using 10 foot long straight edge cutting tool. Depths of strip shall be one fourth of slab thickness. Press strip into groove such that top of strip is level with the concrete surface. Pull off removable top section, if any, prior to troweling.

2. Saw Cut: Contractor may saw cut control joints instead of using preformed strips. Saw cut joints shall be 1/8 inch wide. Saw cut depth should equal 1/3 of slab depth. Cut joints after concrete has hardened sufficiently to prevent raveling; usually 4 to 12 hours after slab has been cast and finished. Use diamond or silicone-carbide blades.

F. Control Joints in Walls: Create weakened planes in cantilevered retaining walls at 25 feet on center. Use preformed strips, placed vertically, full height in each face of wall. Depth of strips shall be one inch.

3.06 REMOVAL OF FORMWORK

A. General: Prevent excessive deflection, distortion, and damage to concrete when forms are stripped. Provide crush plates or wrecking plates where stripping may damage cast concrete surfaces.

B. Formwork and supports at sides of concrete shall remain in place for 24 hours after concrete placement. This period represents cumulative number of hours, not necessarily consecutive, during which the temperature of the air surrounding the concrete is above 50 degrees F. Formwork and shoring which support the weight of concrete shall not be removed until concrete has attained its specified compressive strength.

C. Ensure safety of the structure. Do not superimpose any load on concrete until forms are removed and concrete is cured.

3.07 RE-USE OF FORMS

A. General: Clean and repair surfaces of forms to be re-used in work. Split, frayed, delaminated, or otherwise damaged form facing material will not be acceptable for exposed surfaces. Apply new form coating compound as specified for new formwork.

B. When forms are intended for successive concrete placement, thoroughly clean surfaces and remove fins and laitance. Align and secure joints to avoid offsets. Do not use "patched" forms for exposed concrete surfaces.

END OF SECTION 03 1100

SECTION 03 2100 – CONCRETE REINFORCEMENT

PART 1 GENERAL

1.01 WORK INCLUDED

A. This section includes fabrication and installation of deformed bar and welded wire fabric reinforcing steel.

1.02 RELATED WORK SPECIFIED ELSEWHERE

A. Concrete Formwork - Section 03 11 00.

B. Cast In Place Concrete - Section 03 30 00.

1.03 QUALITY ASSURANCE

A. Reference Standards:

1. American Concrete Institute (ACI)

   a. ACI 301-96 Specifications for Structural Concrete for Buildings.

   b. ACI 315-92 Details and Detailing of Concrete Reinforcement.

   c. ACI 318-85 Building Code Requirements for Reinforced Concrete.

2. American Society for Testing and Materials (ASTM)

   a. ASTM A 82-95 Standard Specification for Steel Wire, Plain, For Concrete Reinforcement

   b. ASTM A 185-94 Standard Specification for Steel Welded Steel Wire Fabric, Plain, for Concrete Reinforcement

c. ASTM A 615/ Plain A 615M-95b — Standard Specification for Deformed and Billet-Steel Bars for Concrete Reinforcement

3. Concrete Reinforcing Steel Institute (CRSI).

a. Manual of Standard Practice - 1992 Edition.

1.04 SUBMITTALS

A. Shop Drawings: Submit shop drawings for reinforcing steel. Comply with ACI 315 requirements showing layout, bar schedules, stirrup spacing, diagrams of bent bars, and arrangement of reinforcing steel. Shop Drawings shall not be made by reproduction of the Contract Drawings.

PART 2 PRODUCTS

2.01 MATERIALS

A. Reinforcing Bars: ASTM A 615, Grade 60. Stirrups and ties may be Grade 40.

B. Welded Wire Fabric: ASTM A 185, flat sheets.

C. Steel Wire: ASTM A 82, 16 gage.

D. Supports for Reinforcing Steel: Wire bar type and precast concrete block type meeting the requirements of CRSI Manual of Standard Practice.

E. Fibrous Reinforcing: 100 percent virgin polypropylene fibrillated fibers containing no reprocessed olefin materials and specifically manufactured for use as concrete reinforcement at a minimum of 0.1% by volume for the control of cracking due to drying shrinkage and thermal expansion/contraction.

2.02 FABRICATION

A. Fabricate reinforcing steel in accordance with fabricating tolerances in ACI 315.

B. Do not fabricate reinforcing steel until shop drawings are approved.

PART 3 EXECUTION

3.01 PLACING BAR SUPPORTS

A. General: Provide bar supports meeting the requirements of CRSI Specification for Placing Bar Supports.

B. Slabs-on-grade: Use supports with sand plates or precast concrete blocks or horizontal runners where base material will not support chair legs.

3.02 PLACING REINFORCING STEEL

A. General: Comply with CRSI Code of Standard Practice for "Placing Reinforcing Bars".

B. Clean reinforcing steel of loose rust and mill scale, earth, ice, and other materials which reduce or destroy bond with concrete.

C. Accurately position, support and secure reinforcing steel against displacement by formwork, construction, or concrete placement operations. Place reinforcing steel to obtain minimum coverages. Arrange, space and securely tie bars and bar supports to hold reinforcing steel in position during concrete placement operations. Set wire ties so ends are directed into concrete, not toward exposed concrete surfaces.

D. Concrete Cover:

1. Concrete cast against and permanently exposed to earth.....3"

2. Concrete exposed to earth or weather:

   Bars larger than No. 5 .....2"
   Bars No. 5 or smaller .....1 1/2"

3. Columns or piers .....1 1/2"

E. Rebar Splices: Locate at points of minimum stress or as shown on contract drawings. Unless noted otherwise, provide lap splices 30 bar diameters (18" minimum length).

F. Welded Wire Fabric Splices: Lap one complete wire spacing.

G. Corner Reinforcing: Provide corner bars of same size and spacing as horizontal reinforcing steel. Lap with horizontal reinforcing 30 bar diameters (18" minimum length).

H. Reinforcing at Construction/Control Joints: Continue reinforcing steel through construction joints unless noted otherwise. Discontinue reinforcing steel 2 inches from preformed construction joints in slabs-on-grade. Cut alternate longitudinal bars at weakened plane control joints in walls.

I. Fibrous Reinforcing:

1. Add fibrous concrete reinforcement to concrete materials at the time concrete is batched in amounts in accord with approved submittals for each type of concrete required.

2. Mix concrete in strict accord with fiber reinforcement manufacturer's instructions and recommendations for uniform and complete distribution.

END OF SECTION 03 2100

SECTION 03 3000 – CAST IN PLACE CONCRETE

PART 1 GENERAL

1.01 WORK INCLUDED

A. This section covers cast-in-place concrete including finishing, surface repair and curing.

1.02 RELATED WORK SPECIFIED ELSEWHERE

A. Concrete Formwork - Section 03 11 00

B. Concrete Reinforcement - Section 03 21 00

C. Concrete Floor Finishes – Section 03 35 30

1.03 QUALITY ASSURANCE

A. Reference Standards: Meet the requirements of the following codes, specifications and standards.

1. American Concrete Institute (ACI) Publications;

a. ACI 301-96 Specifications for Structural Concrete for Buildings.

b. ACI 306.1-90 Standard Specification for Cold Weather Concreting

c. ACI 318-95 Building Code Requirements for Reinforced Concrete.

2. American Society for Testing and Materials (ASTM);

a. ASTM C 31-91 C 31M-96 Standard Practice for Making and Curing Concrete Test Specimens in the Field.

b. ASTM C 33-97 Standard Specification for Concrete Aggregates.

c. ASTM C 39-96 Standard Test Method for Compressive Strength of Cylindrical Concrete Specimens.

d. ASTM C 94-97 Standard Specification for Ready-Mixed Concrete.

e. ASTM C 131-96 Standard Test Method for Resistance to Degradation of Small-Size Coarse Aggregate by Abrasion and Impact in the Los Angeles Machine.

f. ASTM C 136-96a Standard Test Method for Sieve Analysis of Fine and Coarse Aggregates.

g. ASTM C 143-90a Standard Test Method for Slump of Hydraulic Cement Concrete.

h. ASTM C 150-97 Standard Specification for Portland Cement.

i. ASTM C 171-97 Standard Specification for Sheet Materials for Curing Concrete.

j. ASTM C 172-97 Standard Practice for Sampling Freshly Mixed Concrete.

k. ASTM C 173-94a Standard Test Method for Air Content of Freshly Mixed Concrete by the Volumetric Method.

l. ASTM C 231-97 Standard Test Method for Air Content of Freshly Mixed Concrete by the Pressure Method

m. ASTM C 260-95 Standard Specification for Air Entraining Admixtures for Concrete

n. ASTM C 309-97 Standard Specification for Liquid Membrane-Forming Compounds for Curing Concrete

o. ASTM C 330-92 Standard Specification for Lightweight Aggregates for Structural Concrete

p. ASTM C 494-92 Standard Specification for Chemical Admixtures for Concrete

q. ASTM C 618-97 Standard Specification for Coal Fly Ash and Raw or Calcined Natural Pozzolan for Use as a Mineral Admixture in Portland Cement Concrete

r. ASTM D 2103-92 Standard Specification for Polyethylene Film and Sheeting

s. ASTM D 4318-95a Standard Test Method for Liquid Limit, Plastic Limit, and Plasticity Index of Soils

1.04 SUBMITTALS

A. Product Data: Submit manufacturer's product data with application and installation instructions for proprietary materials and admixtures.

B. Concrete Mix Design:

1. Submit mix design in accordance with ACI-301, Section 4.

2. Submit with mix design results of laboratory tests performed within previous 6 months indicating aggregates from the proposed source comply with the requirements of ASTM C 33 or C 330 as applicable.

C. Test Reports: Submit copies of test reports for concrete compressive strength, air content, temperature and slump.

PART 2 PRODUCTS

2.01 MATERIALS

A. Portland Cement: ASTM C 150, Type I or II, low alkali. Use one brand of cement throughout project.

B. Normal Weight Aggregates: ASTM C 33. Provide aggregates from a single source for exposed concrete.

C. Water: Potable.

D. Air-Entraining Admixture: ASTM C 260.

E. Water Reducing Admixture: ASTM C 494.

F. Fly-Ash: ASTM C 618, Class F.

G. Moisture-Retaining Cover: Provide waterproof paper, polyethylene film, or polyethylene-coated burlap meeting the requirements of ASTM C 171.

H. Liquid Membrane-Forming Curing Compound: Liquid type membrane-forming curing compound meeting the requirements of ASTM C 309; Type 1-D with fugitive dye for interior

concrete and foundations; Type 2, white pigmented, for exposed exterior concrete except exposed exterior Architectural concrete, use Type 1-D.

I. Granular base shall meet the following grading requirements when tested in accordance with ASTM C 136.

Sieve Size (Square Openings)	Percent Passing by Weight
1 inch	100
3/4 inch	85-100
No. 4	45-95
No. 200	0-8

The plasticity Index shall be no greater than 3 when tested in accordance with ASTM D 4318. The coarse aggregate shall have a percent wear of 50 or less when tested in accordance with ASTM C.

J. Vapor Barrier: 15 mil polyethylene.

2.02 PROPORTIONING AND DESIGN OF MIXES

A. Prepare design mixes for each type and strength of concrete by either laboratory trial mixture or field experience methods as specified in ACI 301, Section 4. If trial mixture method is used, employ an independent testing facility, acceptable to Architect, for preparing and reporting proposed mix designs.

B. Submit written reports to Architect, or Engineer, of each proposed mix for each class of concrete at least 15 days prior to start of work. Do not begin concrete production until mixes have been approved.

C. Refer to the General Structural Notes for concrete strengths.

D. Admixtures

1. Use air-entraining admixture in all concrete, except air entrainment may, be omitted from concrete to receive a steel trowel finish. The entrained air content for exterior concrete shall be 4 - 7 percent and for interior concrete the air content shall be 3 - 6 percent.

2. Use water reducing admixture conforming to ASTM C 494, Type A, in all concrete unless approved otherwise by the Structural Engineer.

3. Use high range water reducing admixture conforming to ASTM C 494, Type F, in all concrete slabs unless approved otherwise by the Structural Engineer.

4. All other admixtures shall have the written approval of the Architect or Structural Engineer.

5. Calcium chloride is not permitted.

6. All admixtures, except high range water reducers, shall be added to the concrete at the batch plant.

7. Concrete for slabs to receive a steel trowel or float finish shall not contain both fly ash and high range water reducer.

PART 3 EXECUTION

3.01 COORDINATION

A. Coordinate the installation of joint materials and moisture barriers with placement of forms and reinforcing steel. Set screeds accurately. Embedded items shall be accurately aligned and adequately supported. Verify installation of mechanical, plumbing, and electrical items to be embedded in concrete. Correct any unsatisfactory condition before proceeding further.

3.02 PREPARATION

A. Before placing concrete, clean and roughen surface of previously placed concrete. Clean reinforcing steel. Remove debris, providing clean-outs at bottom of forms when necessary. Moisten surfaces to receive concrete unless otherwise prepared. Remove excess water before placing concrete.

B. Install vapor barrier over granular base as recommended by geotechnical report in accordance with manufacturer's instructions and ASTM 1745 to provide a continuous barrier, including taping and sealing all seems and penetrations.

3.03 CONCRETE PLACEMENT

A. General: Comply with ACI 301.

B. Place concrete continuously in layers not deeper than 24 inches. Concrete shall not be placed against concrete which has hardened sufficiently to cause the formation of seams or planes of weakness. If a section cannot be placed continuously, provide construction joints. Deposit concrete as nearly as practicable to its final location to avoid segregation. Do not use vibrators to transport concrete.

C. Maintain reinforcing in proper position during concrete placement operations.

D. Consolidate concrete, immediately after placing, by mechanical vibrating equipment supplemented by hand-spading, rodding or tamping. Use equipment and procedures for consolidation of concrete in accordance with ACI recommended practices.

E. Bring slab surfaces to correct level with straightedge and strikeoff. Use bull floats or darbies to smooth surface. Do not disturb slab surfaces prior to beginning finishing operations.

F. Cold Weather Concreting: Protect concrete work from physical damage or reduced strength caused by frost, freezing or low temperatures. Comply with ACI 306.1.

G. Hot Weather Concreting: When hot weather conditions exist that would impair quality and strength of concrete, reduce delivery time of ready mix concrete, lower the temperature of materials, or add retarder to ensure that the concrete is plastic. Retempering with water is not allowed.

3.04 FINISH OF FORMED SURFACES

A. Rough Form Finish: Provide where formed concrete surfaces are not exposed to view. Tie holes and surface imperfections shall be repaired and patched and fins and other projections exceeding 1/4" in height rubbed down or chipped off.

3.05 FINISH OF HORIZONTAL SURFACES

A. At tops of foundation walls and grade beams finish with a texture matching adjacent formed surfaces unless otherwise indicated.

3.06 SLAB FINISHES

A. Scratch Finish: Apply scratch finish to slab surfaces that are to receive floor topping. Roughen surface before final set, using stiff brushes, or brooms.

B. Provide other finishes in accordance with section 03 35 30 Concrete Floor Finishes.

3.07 CONCRETE CURING AND PROTECTION

A. General: Protect freshly placed concrete from premature drying and excessive cold or hot temperatures. Start initial curing as soon as free water has disappeared from concrete surface after placing and finishing. Continue curing for at least 7 days using one of the following methods.

B. Moisture-retaining Cover curing: Cover concrete surfaces with moisture-retaining cover for curing concrete, placed in widest practicable width with sides and ends lapped at least 3" and sealed. Repair any holes or tears in cover during curing period. All concrete slabs are to be cured with moisture retaining cover for the first 24 hours. After that time the Contractor has the option to

continue the moisture retaining cover, or remove the cover and apply liquid membrane-forming curing compound.

C. Curing compound: Apply curing compound uniformly in accordance with manufacturer's printed instructions.

3.08 CONCRETE SURFACE REPAIRS

A. Patching Surface Imperfections: Remove loose material and patch surface imperfections and holes left by tie rods with cement mortar. Surface imperfections include honeycomb, excessive air voids, sand streaking and cracks.

3.09 FIELD QUALITY CONTROL

A. The Owner shall employ the services of a qualified testing laboratory to perform tests and submit test reports.

B. Sampling Fresh Concrete: ASTM C 172.

C. Slump: ASTM C 143; one test for each set of compressive strength test specimens.

D. Air Content: ASTM C 173 or C 231 for each set of compressive strength test specimens.

E. Concrete Temperature: Test hourly when air temperature is 40 degrees F. and below, when 80 degrees F and above; and when compression test specimens are made.

F. Compression Test Specimen: ASTM C 31, one set of 4 standard cylinders for each compressive strength test, unless otherwise directed. Mold and store cylinders for laboratory cured test specimens except when field cure test specimens are required. Mold one set of standard cylinders for volume of concrete specified below or fraction thereof.

1. Slabs on Grade or Metal Deck	30 cubic yards
2. Footings and stem walls	50 cubic yards
3. All other locations (unless noted otherwise)	30 cubic yards

G. Compressive Strength Tests: ASTM C 39; test 1 specimen at 7 days, 2 specimens at 28 days, and retain one specimen in reserve for later testing. Additional Tests: The testing laboratory will make additional tests of in-place concrete when test results indicate specified concrete strengths and other characteristics have not been attained in the structure as directed by the Architect. The testing laboratory may conduct tests to determine adequacy of concrete by cored cylinders complying with

ASTM C 42 or by other methods as directed by the Architect or Engineer. The Contractor shall pay for such tests conducted, and any other additional testing as may be required, when unacceptable concrete is verified.

H. Special inspection to be per IBC section 1704.

END OF SECTION 03 3000

SECTION 03 35 20

ARCHITECTURAL CONCRETE WALL FINISH

PART 1 - GENERAL

1.1 SUMMARY

A. Section includes required finish for architectural, exposed-to-view, ribbed surface, cast-in-place concrete site walls, planter, and bench.

1. Plywood form boards.

2. Horizontal wood rib forms.

3. Form release agent.

4. Clear coating applied to exposed concrete walls to form barrier to allow graffiti removal and prevent water penetration.

5. Graffiti removal solution.

B. Related sections:

1. Section 03 10 00 - Concrete Formwork, Section 03 20 00 - Concrete Reinforcement, and Section 03 30 00 - Cast-in-Place Concrete: Formwork, reinforcement, mix design, placement, curing, and testing of exposed cast concrete site walls to be finished in accordance with this Section.

2. Section 07 14 00 - Fluid Applied Waterproofing: Waterproofing applied to back side of concrete planter walls.

1.2 SUBMITTALS

A. Provide in accordance with Section 01 33 00 - Submittal Procedures:

1. Product data for form boards, form release agent, sealer, and graffiti control and removal solutions.

2. Shop drawings: Plans, elevations, sections, and details for cast concrete site and planter walls indicating layout and spacing of ribs, cold joint locations, and edge and other installation details.

3. Manufacturer's application instructions for form release agent, and graffiti control application..

1.3 ARCHITECTURAL CONCRETE WALL FIELD SAMPLE

A. In accordance with Section 01 40 00 - Quality Requirements, prepare field sample of exposed cast-in-place concrete wall illustrating horizontal ribbed surface, color, quality, appearance, and applied coatings. Field sample shall establish standard of quality for all exposed-to-view cast-in-place concrete walls. Field sample shall be portion of cast concrete site wall as approved by Architect.

B. Minimum size: 2 feet exposed height by 6 feet long.

C. Finish field sample wall as specified in this Section.

D. Accepted sample shall remain as part of Work and be used during construction as quality standard. Unacceptable field samples shall be completely removed.

PART 2 - PRODUCTS

2.1 ACCEPTABLE MANUFACTURERS

A. Form release agent: US Mix Products Company, Denver, Colorado; 303-778-7227; www.usmix.com.

B. Graffiti control coating: ProSoCo, Inc., Kansas City; 913-281-2700; Lawrence, Kansas; 800-255-4255; www.prosoco.com.

C. Requests to use equivalent products of other manufacturers shall be submitted in accordance with Section 01 25 13 - Product Substitution Procedures.

2.2 CONCRETE MATERIALS

A. Formwork: General requirements as specified in Section 03 10 00 - Concrete Formwork and Accessories.

1. Form boards: Single use, unfaced, 3/4 inch thick, AC Grade plywood .

2. Horizontal wood rib forms: 1 X 6 rough sawn cedar boards.

3. Fabricate formwork without ties.

4. Fabricate forms with straight edges. Do not provide chamfered edges.

B. Concrete: Cement, water, and admixtures as specified in Section 03 30 00 - Cast-in-Place Concrete.

1. Architectural concrete site walls shall use standard gray Portland cement.

C. Reinforcement: Steel reinforcement bars as specified in Section 03 20 00 - Concrete Reinforcement.

2.3 ACCESSORY MATERIALS

A. Form release agent: Chemically reactive, non-staining form release in mineral oil carrier which reacts with alkali in concrete to form barrier inhibiting bonding of concrete to formwork; Slickote as manufactured by US Mix Products Company.

B. Weather sealer and graffiti control coating: Clear, solvent-based silicone elastomer coating to penetrate and fill pores of brick masonry ant to protect surfaces from repeated graffiti attacks without altering the natural appearance; Blok-Guard and Graffiti Control as manufactured by ProSoCo, Inc. Sacrificial graffiti control solutions are not acceptable.

1. Total solids: 9 percent.

2. Flash point: 100 degrees F.

3. Freeze point: Minus 22 degrees F.

4. Shelf life: 1 year in sealed, unopened container.

5. Controls efflorescence, mildew, and other moisture related stains.

6. UV stable.

7. Complies with USEPA AIM VOC Regulation 40 CRF 59.403

C. Graffiti removal solution: Clear graffiti removal solution without halogenated solvents and compatible with sealer and graffiti control coating; Defacer Eraser Graffiti Wipe as manufactured by ProSoCo, Inc.

1. Easily removes most graffiti, including spray paints and markers, from brick surfaces with a towel and rinses with cold or hot water,

2. Will not remove sealer and graffiti coating specified in Paragraph 2.2.A.

3. Flash point: 200 degrees F minimum.

4. Shelf life: 2 years in sealed container.

2.4 CONCRETE MIX

A. Mix concrete in accordance with Section 03 30 00 - Cast-in-Place Concrete.

PART 3 - EXECUTION

3.1 CONSTRUCTING FORMS

A. Erect forms for site walls, planter, and bench as detailed and dimensioned on Drawings and reviewed shop drawings and in accordance with Section 03 10 00 - Concrete Formwork.

B. Construct formwork without form ties. Use slip forms, dead men, walers, kickers, or other means of supporting and bracing formwork as detailed on reviewed shop drawings.

C. Form exposed-to-view concrete wall surfaces with horizontal ribs. Back side surfaces shall be smooth.

1. Forming horizontal ribs: Construct formwork with 1/4 inch wide, horizontal rib openings equally spaced at 5 - 3/4 inch centers as detailed on Drawings and reviewed shop drawings.

2. Ribbed wall surface: Rough, unfinished texture resulting from tough sawn cedar form boards separated by 1/4 inch wide borders formed by concrete extruding through gap between form boards.

D. Fabricate forms with straight, 90 degree edges. Chamfered edges are not acceptable.

E. Form release agent: Prior to casting concrete, spray apply form release agent in thin coating to plywood form boards.

1. Do not saturate. Remove runs and puddles with squeegee or soft rag. Ensure coverage is applied consistently to all forms to ensure uniform concrete finish.

F. Install reinforcing in forms as specified in Section 03 21 00 - Concrete Reinforcement. Protect reinforcing steel from exposure to release agent.

3.2 PLACING CONCRETE

A. Schedule concrete pour soon after application of form release agent to avoid collection of dust and debris.

B. Place concrete in accordance with Section 03 30 00 - Cast-in-Place Concrete.

C. Field inspection and testing to be performed under provisions on Section 01 40 00 - Quality Requirements and Section 03 30 00 - Cast-in-Place Concrete.

3.3 EXPOSED CONCRETE WALL FINISHING

A. Form removal:

1. Do not remove forms and bracing until concrete has gained sufficient strength to carry its own weight and imposed loads. Remove forms in a manner which will prevent damage to concrete.

2. Loosen forms carefully. Do not wedge pry bars, hammers, or tools against concrete surfaces.

B. Finish shall be as-cast concrete. Do not apply rubbed finish. Do not patch, repair, or fill voids without written approval from Architect.

C. Horizontal ribs shall have rough, unfinished texture resulting from rough sawn lumber forms and from concrete extruding through gap between form boards.

D. Remove efflorescence, oil, and other foreign materials from exposed surfaces of finished concrete.

E. Sandblasting: Inspect exposed concrete surfaces and review with Architect. Ensure that color is uniform without noticeable variations in intensity and shade. Uneven surfaces shall be corrected by wet sandblasting.

3.4 APPLYING GRAFFITI CONTROL COATING

A. After concrete has cured 14 days minimum, apply sealer and graffiti control coating to exterior exposed cast concrete walls.

B. Environmental requirements: Do not install coating when ambient temperature is less than 40 or greater than 90 degrees F.

C. Apply 2 coats of coating by spray, brush, or roller in accordance with manufacturer's instructions.

D. Apply each coat at the rate of one gallon per 75 to 125 SF.

E. Thoroughly saturate surface. Apply in overlapping patterns to ensure complete coverage of block texture.

F. Brush out runs and drips.

G. Apply second coat as soon as first coat is dry to touch, approximately 25 minutes. Do not allow more than 2 hours between coats.

H. Cleaning:

1. Immediately remove over spray from adjacent surfaces.

2. Legally dispose of empty coating containers. Do not use containers for other purposes.

END OF SECTION

SECTION 03 35 30

CONCRETE FLOOR FINISHES

PART 1 - GENERAL

1.1 SUMMARY

A. Section includes:

1. Type TC - Troweled Concrete Finish: Specific requirements for placing and consolidating concrete, float and trowel finishing, curing, and protecting concrete floor slabs scheduled to receive, sealed concrete finish, ceramic tile, carpet tile, resilient sheet flooring, or other applied floor coverings.

2. Finish Type SC - Sealed Concrete Finish: Troweled, natural gray cement, interior concrete floor slabs sealed with clear urethane abrasion-resistant coating.

3. Finish Type BF - Broom Finished Concrete: Light broom finish for exterior, natural gray cement concrete sidewalks and slabs.

B. Related sections:

1. Section 03 10 00 - Concrete Formwork.

2. Section 03 20 00 - Concrete Reinforcement.

3. Section 03 30 00 - Cast-in-Place Concrete: Mix design, placement, curing, and testing of cast-in-place concrete for interior concrete floor slabs and exterior walks and paving.

1.2 REFERENCES

A. American Concrete Institute (ACI):

1. ACI 117 - Tolerances for Concrete Construction and Materials and Commentary.

2. ACI 301 - Structural Concrete.

B. American Standards for Testing and Materials (ASTM):

1. ASTM C33 - Concrete Aggregates.

2. ASTM D2134 - Standard Test Method for Determining the Hardness of Organic Coatings with a Sward-Type Hardness Rocker.

3. ASTM D2370 - Standard Test Method for Tensile Properties of Organic Coatings.

4. ASTM D3960 - Standard Practice for Determining Volatile Organic Compound (VOC) Content of Paints and Related Coatings.

5. ASTM D4060 - Standard Test Method for Abrasive Resistance of Organic Coatings by the Taber Abraser.

6. ASTM E1155 - Standard Method for Determining FF Floor Flatness and FL Floor Levelness Numbers.

7. ASTM F1869 - Moisture Vapor Emission Rate of Concrete Subfloor Using Anhydrous Calcium Chloride.

C. National Floor Safety Institute (NFSI) - NFSI Test Method 101A.

1.3 SUBMITTALS

A. Provide in accordance with Section 01 33 00 - Submittal Procedures:

1. Product data for urethane abrasion resistant coating and other concrete finishing products.

2. Shop drawings for installation and layout for control joints for exterior and interior slabs.

3. Manufacturer's certificates showing compliance with specified requirements and approval of installer as required by Paragraph 1.4.

4. Manufacturer's finishing, application, and maintenance instructions.

1.4 QUALITY ASSURANCE

A. Installer of abrasion resistant coating: Experienced in application of coatings and resurfacers to concrete floors with 3 years successful experience and acceptable to manufacturer of abrasion resistant coating.

B. Abrasion resistant coating shall comply with L.A. Rule 66 and VOC/VOS Rules and Regulations.

1.5 FLOOR SLAB FIELD SAMPLES

A. In accordance with Section 01 40 00 - Quality Requirements, construct 16 square foot minimum field samples for each of the following floor slab finishes specified in this Section. Field samples shall be part of constructed work.

1. Type TC - Troweled Concrete: Finish for interior floor slabs designated to receive Type SC - Sealed Concrete Finish, resilient sheet flooring, carpet tile, ceramic tile, or other applied floor coverings.

2. Type SC - Sealed Concrete: Troweled interior, natural gray cement concrete floor slab with clear urethane abrasion resistant coating.

3. Type BF - Broom Finished Concrete: Light broom finish for exterior, natural gray cement concrete slab with control joints.

B. Locate field samples in locations approved by Architect.

C. Accepted samples shall remain as part of Work and be used during construction as quality standard. Protect accepted field samples from damage. Unacceptable field samples shall be acceptably refinished or completely removed.

PART 2 - PRODUCTS

2.1 ACCEPTABLE MANUFACTURERS

A. Abrasion resistant coating: Tennant Company, Minneapolis, Minnesota; 800-553-8033; www.tennantfloorcoatings.com.

B. Joint filler: Sika Corporation, Lyndhurst, New Jersey; 800-933-7452; www.usa.sika.com.

C. Requests to use equivalent products of other manufacturers shall be submitted in accordance with Section 01 25 13 - Product Substitution Procedures.

2.2 CONCRETE MATERIALS

A. Concrete: Natural gray cement, water, and admixtures as specified in Section 03 30 00 - Cast-in-Place Concrete. Obtain cementitious materials from single source with documented service record of 10 years minimum satisfactory service in similar applications and conditions using similar aggregates and cementitious materials.

B. Aggregate: Washed, clean, normal weight aggregate complying with ASTM C33 and as specified in Section 03 30 00 - Cast-in-Place Concrete. Obtain aggregates from single source and of same color throughout.

C. Formwork: As specified in Section 03 10 00 - Concrete Formwork.

D. Reinforcement: Bars, and welded wire steel fabric as specified in Section 03 20 00 - Concrete Reinforcement. Fibrous reinforcement is not acceptable.

E. Cast concrete floor slab properties:

1. Compressive strength: 4,000 PSI minimum.

2. Non-air-entrained.

3. Concrete slump: 4-1/2 to 5 inches.

4. Straight cement mix is preferred. Any admixtures, plasticizers, slag, or fly ash taking the place of Portland cement shall not exceed 20 percent.

2.3 ABRASION RESISTANT COATING PRODUCTS

A. Abrasion resistant coating: High performance clear, one-compartment, oil-free, moisture-cured, urethane coating for protecting interior concrete floors; Wear Guard 420 Gloss Urethane Topcoat as manufactured by Tennant Company.

1. Percent of solids tested in accordance with ASTM D2369: 46.8 percent.

2. Volatile organic compound (VOC) tested in accordance with ASTM D3960: 3.38 pounds per gallon.

3. Abrasion resistance tested in accordance with ASTM D4060: 30 to 40 mg loss.

4. Tensile strength tested in accordance with ASTM D2370: 5,000 PSI.

5. Elongation tested in accordance with ASTM D2370: 120 percent.

6. Flexibility tested in accordance with ASTM D1522: Passes 1/8 inch rating.

7. Sward hardness tested in accordance with ASTM D2134: 32 to 36 for 1 mil film.

8. Chemical resistance: Resistant to hydrochloric acid (muriatic) and jet fuel (JP-4) with no adverse effects based on 7 day spot testing on concrete.

9. Color: Clear.

B. Bonding adhesive: Solvent free type; 413 SF Bonding Additive as manufactured by Tennant Company.

C. Traction grit: White aluminum oxide 60 mesh grit; 291 Grit as manufactured by Tennant Company.

D. Grease remover: Industrial detergent of formulation as recommended by manufacturer for Project conditions; Tennant Detergent as manufactured by Tennant Company.

E. Cleaner: Tennant 9960 as manufactured by Tennant Company.

F. Etchant cleaner: Blend of buffered acids and emulsifiers: 409 Pre-Kote Cleaner as manufactured by Tennant Company.

2.4 ACCESSORY MATERIALS

A. Joint filler: Two-component, premium grade, polyurethane-based elastomeric, non-sag, chemical cure sealant; Sikaflex No. 2C-NS as manufactured by Sika Corporation. Color as selected by Architect from manufacturer's full range.

2.5 CONCRETE MIX

A. Mix concrete in accordance with Section 03 30 00 - Cast-in-Place Concrete.

PART 3 - EXECUTION

3.1 PLACING CONCRETE FOR SLABS

A. Place concrete in accordance with Section 03 30 00 - Cast-in-Place Concrete and ACI 301.

B. During placement of concrete the following shall be present:

1. Contractor's Superintendent.

2. Subcontractor's foremen designated to apply Type SC - Sealed Concrete and Type PC - Polished Concrete finishes.

3. Architect's representative.

C. Field inspection and testing to be performed under provisions on Section 01 40 00 - Quality Requirements and Section 03 30 00 - Cast-in-Place Concrete.

D. Layout decorative and expansion control joints as shown on Drawings and reviewed shop drawings.

E. Depositing:

1. Do not deposit concrete partially hardened or contaminated by foreign material.

2. Deposit concrete continuously in layers such that no material is deposited on concrete sufficiently hardened to cause seams or planes of weakness.

3. Between construction joints, place concrete in continuous operation such that concrete is plastic at all times and flows readily into spaces between reinforcement.

4. Use placement procedures to avoid segregation.

5. Deposit concrete as near as possible to its final position.

6. Place concrete in one continuous placement up to 20,000 square feet maximum.

7. Do not place concrete over standing water, mud, frost, ice, or snow.

8. Do not use wet screeds.

F. Consolidating:

1. Consolidate and screed floor slabs to allow construction joint pattern as indicted on Drawings and reviewed shop drawings.

2. Consolidate concrete in compliance with ACI 301 by vibrating laser screeds to ensure concrete is thoroughly worked around reinforcing and other embedded items and into corners of forms.

   a. Other vibrating screeding methods are acceptable only where laser screed is not accessible.

   b. Check laser screed level head 3 times minimum during each pour. Use feeler gauge to measure deviations. If deviations are present, replace head with new straight one.

   c. Use internal vibration along construction joints and at slab abutments.

   d. Do not use grate tampers, jitterbugs, or mesh rollers.

3. Consolidate each concrete layer with previously placed layers to eliminate air or stone pockets which may cause honeycombing, pitting, or weakness areas.

4. Do not insert vibrator into portions of concrete that have begun to set.

5. Do not use vibrators to transport or move concrete in forms.

6. Keep spare vibrator on site during concrete operations.

G. After concrete placement, adjust forms and bracing as required to maintain proper alignment and eliminate leakage of cement paste.

3.2 LEVELING AND FLOATING CONCRETE SLABS

A. General: Do not add water or cement to slab surfaces during finishing operations. Do not perform finishing while water is present on slab surface.

B. Initial leveling: Complete floating, darbying, and straight-edging before any bleed water is present on slab surface. Use 10 foot wide minimum checkrod or highway straightedge for initial and later leveling.

C. Hand and power floating:

1. Do not start floating until these conditions are met:

a. Bleeding is complete and water is gone including water sheen on slab surface.

b. Concrete will sustain weight of finisher without creating more than 1/8 to 1/4 inch indentations.

c. Mortar is not thrown by rotating blades of power float.

2. Do not use these tools for floating:

a. Power troweling machine with trowel blades.

b. Fresno or other type of wide metal trowel.

c. Power floating machine with water attachment for wetting concrete.

3. Float 3 times minimum with each floating at right angles to previous floating, and final pass at 45 degrees to previous pass.

D. Drains: Where indicated on Drawings and reviewed shop drawings, form 18 inch radius around floor drains and pitch concrete surface to drains at rate of 1/4 inch per foot.

3.3 TROWELED CONCRETE FLOOR FINISH

A. Type TC - troweled concrete finish: After floating, power trowel or hand trowel interior concrete floor slabs in compliance with ACI 302 1R, Class 5. Apply troweled finish to these interior floor slabs:

1. Storage, custodial, and other rooms indicated in Finish Schedule to be exposed Type SC - Sealed Concrete as specified in Paragraph 3.6.

2. Rooms to receive ceramic tile, carpet tile, resilient sheet flooring and other applied flooring as indicated in Finish Schedule.

B. For first troweling, keep blade as flat as possible and use low speed, minimizing washboard or chatter marks and pitting.

C. Trowel 2 times minimum with first two trowelings at right angles. Some burn marks are acceptable as determined by field sample. Cease troweling before blades scratch surface.

D. Allow time between trowelings for concrete to stiffen and water sheen to disappear.

E. Do not add water to slab surface during troweling.

F. Do not move trowel machines over existing hardened concrete slabs. Trowels shall be carried off slabs. When parking power trowels on fresh concrete, place on top of plywood.

G. Provide dense, smooth trowel surface, uniform in texture to match approved field sample. Ensure kneeboard impressions, trowel marks, or chattered areas are not evident in finished trowelled concrete slabs.

H. Saw cut 1/4 inch wide control joints to create layouts indicated on Drawings and reviewed shop drawings.

3.4 TOLERANCES

A. Conform to requirements of ACI 117 and ACI 301:

B. Floor flatness (FF) and Floor Levelness (FL) shall be as follows:

1. Specified Overall Value (SOV): FF50/FL35.

2. Minimum Local Value (MLV): FF33/FL24.

3.5 CURING AND PROTECTION

A. Moisture Curing:

1. Immediately begin curing after placing and floating.

2. Keep concrete surface continuously wet by covering with absorbent cover.

3. Lap adjacent cover edges 4 inches minimum.

4. Thoroughly saturate cover with water and keep continuously wet.

5. Curing with acrylic curing and sealing compounds and polyethylene sheet are not acceptable.

B. Take precautions to prevent staining or damaging concrete prior to grinding, polishing, and sealing.

1. Prohibit storage of steel members and other materials or setting equipment on concrete slabs.

2. If construction equipment must be used for placing concrete, diaper components that might drip oil, hydraulic fluid, or other liquids.

3. Prohibit pipe cutting and using pipe cutting machinery on concrete slabs.

4. Markings for partition framing, doors, and other locations:

a. Acceptable markers: White and blue chalks.

b. Unacceptable markers: Silicone chalks, red and yellow chalks, black markers, and wax pencils.

c. Do not use silicone sprays to retain chalk lines.

5. Ensure the following are not applied to concrete slabs scheduled for polishing.

   a. Tape, glue, solvents, Pinesol, varnish, non-breathing plastics, liquid nails, silicone plastics, nails, plumbers glue, foam insulation, bond release agents, oils, grease, paint, grease sticks, spray paints, crayons, muriatic acid, and other chemicals and agents detrimental to polishing finish process.

6. To avoid transfer of resins and tannins to concrete, do not place lumber, plywood, sheet goods, insulation boards, gypsum board, and other similar materials on slabs for extended periods of time. Place cardboard between any stored material and concrete slab.

7. Prohibit acids and acidic detergents from contacting concrete surfaces.

8. Cover concrete floors with drop cloths during painting. If paint is spilled on concrete floor, remove paint immediately.

3.6 APPLICATION OF ABRASION RESISTANT COATING TO INTERIOR CONCRETE FLOOR SLABS

A. Interior exposed concrete floor slabs scheduled to be sealed with abrasion resistant coating, Type SC - Sealed Concrete, shall be placed, consolidated, trowel finished, and cured as specified above in Paragraphs 3.1, 2, 3, 4, and 5.

B. Prepare slabs and apply abrasion resistant coating to interior floor slabs as indicated in Finish Schedule and in accordance with manufacturer's instructions and reviewed shop drawings.

C. Inspect slabs: Verify concrete substrates and conditions are acceptable for finishing in accordance with manufacturer's instructions. Ensure:

   1. Concrete has cured 30 days minimum and is free of curing compounds and concrete laitance.

   2. Properties specified in Paragraphs 2.2.E and 3.4 have been obtained.

   3. Troweled finish, Type TC, as specified in Paragraph 3.3 has been applied and is acceptable for polishing.

   4. Concrete slab has neutral alkalinity and moisture content does not exceed 3 pounds per 1,000 square feet in 24 hours when tested in accordance with ASTM F1869 using calcium chloride test.

   5. Ensure concrete surfaces are clean and free of dirt and other foreign matter harmful to concrete finishing.

   6. Do not proceed until deficiencies have been addressed.

D. Thoroughly clean surfaces. Scrub with detergent to remove coatings, dirt, oil, and laitance. Rinse with clean water. Leave concrete surfaces clean and dry, ready for application of abrasion resistant coating.

E. Immediately apply abrasion resistant coating.

F. Conditioning: Apply etchant cleaner and ensure solution reacts in equal fashion over all areas. Do not use unbuffered muriatic acid to condition concrete slabs.

G. Remove lint from squeegees and rollers to be used in applying coating.

H. Abrasion resistant top coat: Mix and add bonding additive in accordance with manufacturer's instructions. Mix only enough material which can be applied within 2 hours.

1. Apply first coat at rate of 330 square feet per gallon.

2. Allow coating to dry 4 hours at approximately 75 degrees F.

3. Sand with 80 grit sandpaper, detergent scrub, and rinse with clean water to ensure adequate adhesion between coats.

4. Apply second coat at rate of 330 square feet per gallon.

5. Allow coating to dry 12 hours at approximately 75 degrees F. Limit traffic from coated floors for 24 hours.

3.7 LIGHT BROOM FINISH FOR EXTERIOR SIDEWALKS AND SLABS

A. Type BF - Broom concrete finish: Apply light broom finish to exterior concrete sidewalks and slabs as indicated on Drawings.

B. Tamp plastic concrete with suitable tools to force loose aggregate away from surface. Float surfaces to even plane with no coarse aggregate visible.

C. Maintain slabs level within plus or minus 1/4 inch in 10 feet.

D. Apply transverse broom finish to exterior sidewalks, ramps, and slabs.

E. Tool 1/4 inch wide control joints as indicated on Drawings and reviewed shop drawings.

F. After concrete is cured, fill control joints with exterior grade joint filler.

3.8 PROTECTION

A. Protect concrete interior floors and exterior slabs from damage from subsequent construction operations. Provide protective coverings as required.

END OF SECTION

SECTION 03 48 00

PRECAST CONCRETE SPECIALTIES

PART 1 - GENERAL

1.1 SUMMARY

A. Section includes precast concrete:

1. Splashpads.
2. Parking bumpers (wheel stops).
3. Bollards for entry plaza adjacent to parking area.

1.2 REFERENCE STANDARDS

A. American Concrete Institute (ACI) Publications:

1. ACI 301 - Specifications of Structural Concrete for Buildings.

B. American Society for Testing and Materials (ASTM) Publications:

1. ASTM A185 - Welded Steel Wire Fabric for Concrete Reinforcement.
2. ASTM A615 - Deformed and Plain Billet-Steel Bars for Concrete Reinforcement.
3. ASTM C33 - Concrete Aggregates.
4. ASTM C150 - Portland Cement.

C. Precast Concrete Institute (PCI):

1. PCI NML-117 - Manual for Quality Control for Plants and Production of Architectural Precast Concrete Products.
2. PCI NML-122 - Architectural Precast Concrete.

1.3 DESIGN REQUIREMENTS

A. Design units to withstand live and dead loads and handling and erection forces.

1.4 SUBMITTALS

A. Provide in accordance with Section 01 33 00 - Submittal Procedures:

1. Shop drawings: Indicate precast unit profiles, dimensions, layout, locations, connection details, support items, and relationships to adjacent materials.
2. Samples illustrating surface finish, color, and texture.

1.5 QUALITY ASSURANCE

A. Work shall conform to PCI NML-123.

1.6 DELIVERY, STORAGE AND HANDLING

A. Handle precast concrete units consistent with their shape and design. Lift and support only from support points.

B. Protect units to prevent staining, chipping, and spalling.

PART 2 - PRODUCTS

2.1 MATERIALS

A. Reinforcement:

1. Reinforcing bars: Grade 60, ASTM A615.

2. Welded wire fabric: ASTM A185.

B. Cement: Type I, ASTM C150, Portland type.

1. Color for bollards: White.

2. Color for parking bumpers and splashpads: Grey.

C. Fine and coarse aggregates: ASTM C33. Provide crushed white marble aggregate for bollards.

2.2 MIXES

A. Minimum compressive strength (f'_c) at 28 days: 3,000 psi in accordance with ACI 301.

B. Concrete for bollards shall use white Portland cement with crushed white marble aggregate.

2.3 FABRICATION

A. Fabricate in conformance with PCI MNL-117.

B. Use rigid molds, constructed to maintain precast unit uniform in shape, size, and finish.

C. Finish: Produce in forms that impart a smooth finish.

D. Maintain consistent quality during manufacture.

E. Reinforce with steel bars and welded wire fabric as required for structural strength and thermal expansion and contraction.

F. Cure units to develop concrete quality and to minimize appearance blemishes such as non-uniformity, staining, and surface cracking.

G. Ensure exposed-to-view finish surfaces are uniform in color and appearance.

2.4 PRECAST SPLASHPADS

A. Nominal size: 12 inches wide by 36 inches long by 3 inches high.

B. Shape: Sloped bottom with 2-inch high minimum lip on back and sides.

2.5 PARKING BUMPERS

A. Nominal size: 10 inches wide by 8 inches high by 84 inches long.

B. Profile: Chamfered top edges.

C. Provide 2 holes for securing bumpers to pavement with steel dowels.

2.6 BOLLARDS

A. Fabricate bollards for entry plaza from white concrete using white Portland cement and crushed white marble aggregate.

B. Profile: Cylinder with straight top edges. Fabricate bollards with 4 inch diameter opening in bottom surface to receive 3-1/2 inch diameter steel pipe anchor embedded in concrete foundation as detailed on Drawings and reviewed shop drawings..

C. Nominal size: 18 inch diameter by 16 inches high.

2.7 FABRICATION TOLERANCES

A. Variation from dimensions indicated on shop drawings: 1/8 inch.

PART 3 - EXECUTION

3.1 INSTALLATION

A. Place units without damage to shape or finish. Replace damaged units.

B. Splashpads: Coordinate placement of splashpads with provision of roof drains specified in Section 07 54 00 - Thermoplastic Membrane Roofing and Section 07 62 00 - Sheet Metal Flashings and Trim.

C. Parking bumpers: Install after asphalt pavement is placed. Center in parking space. Anchor to ground with 1/4 inch diameter steel dowels 24 inches long minimum. Drive rods flush with top of parking bumper.

D. Bollards: Install bollards on entry plaza as indicated on Drawings. Uniformly space bollards.

1. Coordinate with casting of concrete foundations specified in Section 03 30 00 - Cast-in-Place Concrete and embedment of steel pipe anchors specified in Section 05 50 00 - Metal Fabrications.

2. After foundations are cured, set bollards over steel pipe anchors.

END OF SECTION

SECTION 051200 - STRUCTURAL STEEL

PART 1 GENERAL

1.01 WORK INCLUDED

A. This section includes the fabrication and erection of structural steel.

1.02 RELATED WORK SPECIFIED ELSEWHERE

A. Steel Joists - Section 05 21 00

B. Metal Deck - Section 05 30 00

C. Miscellaneous Metals - Section 05 50 00

1.03 QUALITY ASSURANCE

A. Qualifications of Fabricator: Fabricator shall have a minimum of 5 years experience in the fabrication of structural steel.

B. Qualifications of Erector: Erector shall have a minimum of 5 years experience in the erection of structural steel.

C. Qualifications of Field Welders: Welders shall be certified in accordance with AWS D1.1 within the last 12 months.

D. Reference Standards:

1. American Society for Testing and Materials (ASTM)

a. ASTM A 36 A 36M-94 Standard Specification for Carbon Structural Steel.

b. ASTM A 53-95 Standard Specification for Pipe, Steel, Black and Hot-Dipped, Zinc-coated Welded and Seamless.

c. ASTM A 307-94 Standard Specification for Carbon Steel Bolts and Studs, 60,000 PSI Tensile Strength.

d. ASTM A 325-94 Standard Specification for Structural Bolts, Steel, Heat Treated, 120/105 ksi Minimum Tensile Strength.

e. ASTM A 500-93, Standard Specification for Cold-Formed Welded and Seamless Carbon Steel Structural Tubing in Rounds and Shapes.

2. American Welding Society (AWS), latest edition.

a. AWS D1.1-92 Structural Welding Code-Steel.

3. American Institute of Steel Construction (AISC), Steel Construction Manual, latest edition.

a. Specification for Structural Steel Buildings

b. AISC Code of Standard Practice

c. Specification for Structural Joints Using ASTM A 325 or A 490, Classes 10.9 and 10.9.3.

1.04 SUBMITTALS

A. Shop Drawings: Submit shop drawings in hard copy form including complete details and schedules for fabrication and assembly of structural steel members. Include details of cuts, connections, camber, holes, and other pertinent data. Indicate welds by standard AWS symbols, and show size, length, and type of each weld. Shop drawings shall not be made by reproduction of the Contract Drawings.

B. Provide setting drawings and directions for installation of anchor bolts and other anchorages to be installed by others.

C. Welder Certification: Submit affidavit stating that all welders are certified in accordance with AWS.

D. See BIM Requirements per 01 3100 section 1.10.

1.05 PRODUCT DELIVERY, STORAGE, AND HANDLING

A. Support structural steel above ground on skids, pallets, platforms, or other supports.

B. Protect steel from damage.

C. Store packaged materials in original unbroken package or container.

D. Do not store materials on structure in a manner that might cause distortion or damage to members or supporting structures.

E. Replace damaged shapes or members.

PART 2 PRODUCTS

2.01 MATERIALS

A. Structural Steel Shapes, Plates, and Bars: ASTM A 36.

B. Structural Steel Pipe: ASTM A 53, Type E or S, Grade B.

C. Structural Steel Tubing: ASTM A 500, Grade B, Fy = 46 ksi.

D. Anchor Bolts: ASTM A 307 or ASTM A 36

E. High Strength Tension Control Threaded Fasteners: Meet requirements of ASTM A 325.

F. Headed Anchor Shear Studs: By the Nelson Division of TRW.

G. Welding Electrodes: E 70 Series.

H. Shop Primer Paint: Fabricators standard rust inhibitive primer.

I. Non-Metallic, Non-Shrink Grout: Meets the requirements of Corp of Engineers specifications CRD-C621.

2.02 FABRICATION

A. Fabrication shall be in accordance with the AISC "Code of Standard Practice for Buildings and Bridges".

B. Connections: Weld or bolt shop connections as indicated on the approved shop drawings. Any changes made from the contract drawings must be clouded on the shop drawings and approved by the engineer of record. Design connections to support reactions and forces where indicated on the drawings.

C. Shop Welds: Shall be visually inspected by the Fabricator's quality control department.

2.03 SHOP PAINTING

A. General: Shop paint structural steel, except those members or portions of members to be embedded in concrete or mortar. Paint embedded steel which is partially exposed on exposed portions and initial 2" of embedded areas only.

B. Do not paint surfaces which are to be welded or high-strength bolted with friction-type connections.

C. Surface Preparation: After inspection and before shipping, clean steel work to be painted. Remove loose rust, loose mill scale, and spatter, slag or flux deposits. Clean steel in accordance with Steel Structures Painting Council (SSPC) as follows:

1. SP-1 "Solvent Cleaning"

2. SP-2 "Hand Tool Cleaning"

D. Painting: After surface preparation, apply structural steel primer paint in accordance with manufacturer's instructions. Provide one coat.

PART 3 EXECUTION

3.01 COORDINATION

A. Field Measurements: Verify all elevations, locations, and dimensions of surfaces to receive structural steel.

B. Anchor Bolts and Other Embedded Items: Verify locations and positions of anchor bolts and other embedded items used to support structural steel.

C. Correct any unsatisfactory conditions prior to erection of structural steel.

3.02 PREPARATION

A. Clean surfaces to receive structural steel prior to erection.

3.03 ERECTION

A. General: Erect structural steel in accordance with AISC "Code of Standard Practice for Steel Buildings and Bridges".

B. Field Assembly: Assemble structural steel accurately to the lines and elevations shown on the drawings. Align and adjust components accurately before fastening.

C. Temporary Bracing: Provide temporary bracing or guys to secure structural steel against wind, seismic, or construction loads. It is the responsibility of the Contractor to maintain stability of the structure during erection.

D. Field Bolted Connections: Install high strength tension control bolts in accordance with AISC Specifications for Structural Joints Using ASTM A325 and A490 Bolts and the manufacturer's instructions. Where clearance within a connection does not permit the use of tension control bolts, standard A325 bolts shall be used and inspected in accordance with the AISC Specification for Structural Joints.

E. Field Welding: Perform all welds in accordance with AWS.

F. Inspection of Field Welds: Perform visual inspection of all field welds. If any welds appear to be unsatisfactory, they shall be tested in accordance with ASTM E160 and/or replaced at the expense of the Contractor.

G. Gas Cutting: Do not use gas cutting torches in field to cut structural framing.

H. Do not enlarge unfair holes by burning. Ream holes that must be enlarged to admit bolts.

I. Field Touch-up Painting (Primer): Paint all bolts, washers, and nuts after connections have been tightened and checked. Paint field welds. Paint all abrasions in shop coat. Use same paint as for shop painting.

J. Grout Placement: Comply with the manufacturer's instructions.

K. Tighten anchor bolts after supported members have been positioned and plumbed.

END OF SECTION 05 1200

SECTION 05 2100 – STEEL JOISTS

PART 1 GENERAL

1.01 WORK INCLUDED

A. This section includes the fabrication and erection of open web steel joists.

1.02 RELATED WORK SPECIFIED ELSEWHERE

A. Structural Steel - Section 05 12 00

1.03 QUALITY ASSURANCE

A. Qualification of Fabricator: Fabricator shall be a member of the Steel Joist Institute.

B. Qualification of Field Welders: Welders shall be certified in accordance with AWS D1.1 within the last 12 months.

C. Reference Standards:

1. American Society for Testing and Materials (ASTM)

   a. ASTM A 307-94 Standard Specification for Carbon Steel Bolts and Studs, 60 000 PSI Tensile Strength

2. Steel Joist Institute (SJI) Standard Specifications, Load Tables and Weight Tables for Steel Joists and Joist Girders.

   a. K-Series and LH-Series Open Web Steel Joists SJI,1989

1.04 SUBMITTALS

A. Certification: Submit manufacturer's certification that joists comply with SJI Specifications.

B. Shop Drawings: Submit detailed drawings showing layout of joist units, special connections, jointing and accessories. Include mark, number, type, location and

spacing of joists and bridging. Shop Drawings shall not be made by reproduction of the Contract Drawings.

C. See BIM Requirements per 01 3100 section 1.10.

1.05 PRODUCT DELIVERY, STORAGE, AND HANDLING

A. Support structural steel above ground on skids, pallets, platforms, or other supports.

B. Protect steel from damage.

C. Store packaged materials in original unbroken package or container.

D. Do not store materials on structure in a manner that might cause distortion or damage to members or supporting structures.

E. Replace damaged shapes or members.

PART 2 PRODUCTS

2.01 MATERIALS

A. Steel: Comply with SJI Specifications.

B. Unfinished Threaded Fasteners: ASTM A307, Grade A, regular hexagon type, low carbon steel.

C. Steel Prime Paint: Comply with SJI Specifications.

2.02 FABRICATION

A. Fabricate steel joists in accordance with SJI Specification.

B. Extended Ends: Provide extended ends on joists as required complying with applicable SJI Specifications and load tables.

C. Ceiling Extensions: Provide ceiling extensions in areas having ceilings attached directly to joist bottom chord. Provide an extended bottom chord element of sufficient strength to support ceiling construction. Extend ends to within 1/2" of finished wall surface unless otherwise indicated.

D. Bridging: Provide horizontal or diagonal type bridging for "open web" joists, as required by SJI Specifications.

E. Shop Painting: Remove loose scale, heavy rust, and other foreign materials from fabricated joists and accessories before application of shop paint.

F. Apply one shop coat of primer paint to steel joists and accessories, by spray, dipping, or other method to provide a continuous dry paint film thickness of not less than 0.50 mil.

PART 3 EXECUTION

3.01 COORDINATION

A. Verify all elevation locations and dimensions of surfaces to receive steel joists. Furnish plates, angles, etc. as required to secure steel joists.

3.02 ERECTION

A. Place and secure steel joists in accordance with SJI Specifications, approved shop drawings, and as herein specified.

B. Placing Joists: Do not start placement of steel joists until supporting work is in place and secured. Place joists on supporting work, adjust and align in accurate locations and spacing before permanently fastening.

C. Bridging: Install bridging simultaneously with joist erection, before construction loads are applied. Anchor ends of bridging lines at top and bottom chords where terminating at walls or beams.

D. Fastening Joists: Field weld joists to supporting steel framework in accordance with SJI Specifications for type of joists used. Coordinate welding sequence and procedure with placing of joists unless noted on contract drawings. Bolt joists to supporting steel framework where required by SJI Specifications.

E. Touch-Up Painting: After joist installation, paint field bolt heads and nuts, and welded areas, abraded or rusty surfaces on joists and steel supporting members. Wire brush surfaces and clean with solvent before painting. Use same type of paint as used for shop painting.

END OF SECTION 05 2100

SECTION 05 3000 – METAL DECKING

PART 1 GENERAL

1.01 WORK INCLUDED

A. Provide all metal decking complete in place as shown on the drawings, specified herein, and needed for a complete and proper installation.

1.02 RELATED WORK SPECIFIED ELSEWHERE

A. Structural Steel - Section 05 12 00

B. Steel Joists - Section 05 21 00

C. Lightgage Metal Framing - Section 05 40 00

D. Building Insulation – Section 07 21 00 for acoustical filler strips in acoustical decking.

E. Thermoplastic Membrane Roofing – Section 07 54 00 for installation of acoustical filler strips in acoustical decking.

1.03 QUALITY ASSURANCE

A. Reference Standards:

1. Qualification of Field Welders: Welders shall be certified in accordance with AWS D1.3 within the last 12 months.

2. American Society of Testing and Materials (ASTM) Standard Specification, latest edition.

a. ASTM A 570/ A 570 M-97 Standard Specification for Steel, Sheet and Strip, Carbon, Hot Rolled, Structural Quality.

b. A 611-97 Steel, Cold-Rolled Sheet, Carbon, Structural Quality.

c. ASTM A 653/ A 653M-97 Standard Specification for Steel Sheet, Zinc-Coated (Galvanized) or Zinc-Iron Alloy-Coated (Galvannealed) by the Hot-Dip Process

3. American Welding Society (AWS), latest edition.

   a. D1.3-92, Structural Welding Code - Sheet Steel

4. Steel Deck Institute.

   a. SDI Design Manual for Floor Decks and Roof Decks

1.04 SUBMITTALS

A. Product Data: Submit manufacturer's specifications and installation instructions for each type of decking and accessories.

B. Shop Drawings: Submit detailed drawings showing layout and types of deck panels, anchorage details, and conditions requiring closure panels, supplementary framing, sump pans, cant strips, cut openings, special jointing or other accessories. Shop Drawings shall not be made by reproduction of the Contract Drawings.

C. See BIM Requirements per 01 3100 section 1.10.

1.05 PRODUCT DELIVERY, STORAGE AND HANDLING

A. Support metal deck above ground on skids, pallets, platforms or other supports.

B. Protect metal deck from damage.

C. Store packaged materials in original unbroken package or container.

PART 2 PRODUCTS

2.01 MATERIALS

A. Metal Roof Deck: ASTM A 611, Grade C. See plans for type, size and finish.

B. Acoustical Roof Deck: Fabricate panels, without top-flange stiffening grooves, to comply with “SDI Specifications and Commentary for Steel Roof Deck,” in SDI Publication No. 29, and the following:

1. Prime-Painted Steel Sheet: ASTM A 611, Grade C minimum, shop primed with gray or white baked-on, lead- and chromate-free rust-inhibitive primer complying with performance requirements of FS TT-P-664.
2. Deck Profile: Type WR, wide rib.
3. Profile Depth: 1 ½ inches.
4. Design Uncoated-Steel Thickness: 0.0358 inch where 20 gage is indicated, 0.0474 inch where 18 gage is indicated.
5. Span Condition: As indicated.
6. Side Laps: Overlapped.
7. Acoustical Perforations: Deck units with manufacturer's standard perforated vertical web.
8. Acoustical Performance: NRC 0.90, tested according to ASTM C 423.
9. Provide surfaced glass fiber insulation to be installed in deck flutes under section 07 54 00.

C. Metal Floor Deck: ASTM A 570 with galvanized finish. See plans for type and size.

D. Finishes:

1. Painted: Manufacturer's baked-on, rust-inhibitive paint.

2. Galvanized: Conform to ASTM A 653, G60.

PART 3 EXECUTION

3.01 COORDINATION

A. All edge angle shall be in place with proper attachment prior to installation of metal deck. All roof and floor opening frames shall be installed prior to deck installation.

3.02 INSTALLATION

A. General: Install deck units and accessories in accordance with manufacturer's recommendations and final shop drawings, and as specified herein. Locate deck bundles to prevent overloading of structural members.

B. Place deck units on supporting steel framework and adjust to final position with ends accurately aligned and bearing on supporting members before being permanently fastened. Do not stretch or contract side lap interlocks.

C. Place deck units in straight alignment for entire length of run.

D. Place deck units flat and square, secured to adjacent framing without warp or excessive deflection.

E. Lap ends of deck units a minimum of 2" over supports.

F. Place deck units to permit proper attachment to the perimeter deck angle.

G. Do not use deck units for storage or working platforms until permanently secured.

H. Cut and neatly fit deck units and accessories around other work projecting through or adjacent to the decking, as shown.

I. Fasten deck units to steel supporting members as shown on the structural drawings.

J. Fasten side laps of units as called for on the structural drawings.

K. Care shall be exercised in the selection of electrodes and amperage to provide positive welds and to prevent high amperage blowholes.

L. Comply with AWS D1.3 requirements and procedures.

M. Provide additional metal reinforcement and closure pieces as required for strength, continuity of decking and support of other work shown.

N. Install closure strips at all locations as recommended by the manufacturer to provide a complete installation.

O. Provide cleaning and touch-up painting of field welds, abraded areas and rust spots, as required for all exposed areas after erection and before proceeding with field painting.

END OF SECTION 05 3000

SECTION 05 4000 – LIGHTGAGE METAL FRAMING

PART 1 GENERAL

1.01 WORK INCLUDED

A. This section includes all lightgage studs, joists and track, 20 gauge or heavier, including bridging, and related accessories as indicated on the Contract Drawings and specified herein.

1.02 RELATED WORK SPECIFIED ELSEWHERE

A. Structural Steel - Section 05 12 00

B. Steel Joists - Section 05 21 00

C. Drywall Studs - Section 09 26 0 0

1.03 QUALITY ASSURANCE

A. Reference Standards:

1. American Iron and Steel Institute (AISI) Design of Cold Formed Steel Structural Members, 1980.

2. American Welding Society of (AWS) D1.3, 1992 Structural Welding Code.

3. American Society of Testing and Materials (ASTM).

a. ASTM A 570/ A 570M-95 — Standard Specification for Steel, Sheet and Strip, Carbon, Hot Rolled, Structural Quality.

b. ASTM A 611-94 — Standard Specification for Steel, Sheet, Carbon, Cold Rolled, Structural Quality.

c. ASTM A 653/ A 653M-95 — Standard Specification for Steel Sheet, Zinc-Coated (Galvanized) or Zinc-Iron Alloy-Coated (Galvannealed) by the Hot-Dip Process

1.04 SUBMITTALS

A. Submit manufacturer's product information and installation instructions for each item of lightgage framing. Submit shop drawings for all prefabricated lightgage systems.

1.05 PRODUCT DELIVERY, STORAGE, AND HANDLING

A. Protect metal framing units from rusting and damage. Deliver to project site in manufacturer's unopened containers or bundles, fully identified with name, brand, type, and grade. Store off ground in a dry ventilated space or protect with suitable waterproof coverings.

PART 2 PRODUCTS

2.01 MATERIALS

A. Metal Framing:

1. All 12, 14, and 16 gage steel studs and joists shall be formed from steel that meets the requirements of one of the following standards with a minimum yield strength of 50,000 psi:

   a. Painted Material - ASTM A 570, Grade 50.

   b. Galvanized Material - ASTM A 653 Grade 50.

2. All 18 and 20 gage steel studs and joists; all track, bridging and accessories shall be formed from steel that meets the requirements of one of the following with a minimum yield strength of 33,000 psi:

   a. Painted Material - ASTM A 611, Grade C.

   b. Galvanized Material - ASTM A 653.

B. Material Finishes: All stud and joist components shall be primed with paint meeting the performance requirements of TT-P-1636C, or shall be formed from steel having a G-60 galvanized coating or better.

2.02 FABRICATION

A. Framing components may be prefabricated into panels prior to erection. Prefabricated panels shall be square, with components attached to prevent racking.

Handling and lifting of panels shall be done in a manner as to not cause distortion in any member.

B. All framing components shall be cut squarely for attachment to perpendicular members, or as required for an angular fit against abutting members. Members shall be held positively in place until properly fastened.

PART 3 EXECUTION

3.01 INSTALLATION

A. Install metal framing systems in accordance with manufacturer's printed instructions and recommendations, unless otherwise indicated on Contract Drawings.

B. Install and align tracks accurately to layout at base and tops of studs. Secure tracks as indicated on Contract Drawings. Provide fasteners at corners and ends of tracks.

C. Install supplementary framing, blocking and bracing in metal framing system to support fixtures, equipment, etc. Comply with stud manufacturer's recommendations and industry standards, considering weight and loading of each item.

D. Secure studs to top and bottom tracks by welding at both inside and outside flanges unless noted otherwise. Weld multiple studs together with 1 inch of weld every 12 inch max on both sides of studs.

E. Frame wall openings larger than 2'-0" square with double studs at each jamb of frame except where more than 2 are either shown or indicated in manufacturer's instructions. Install tracks and jack studs above and below wall openings. Anchor tracks to jamb studs with stud shoes or by welding, and space jack studs same as full-height studs of wall. Secure stud system wall opening frame in manner indicated.

F. Install horizontal bridging in stud system, spaced (vertical distance) at no more than 4'-0" o.c. Weld at each intersection.

G. Touch-up shop-applied protective coatings damaged during handling and installation. Use compatible primer for prime coated surfaces; use galvanizing repair paint for galvanized surfaces.

END OF SECTION 05 4000

SECTION 05 50 00

METAL FABRICATIONS

PART 1 - GENERAL

1.1 SUMMARY

A. Section includes:

1. Steel hinged gate for dumpster enclosure.
2. Bicycle rack.
3. Steel pipe bollards.
4. Steel pipe anchors for precast concrete bollards.

B. Related sections:

1. Section 03 30 00 - Cast-in-Place Concrete: Concrete footings for steel pipe bollards and anchors.
2. Section 09 91 00 - Painting: Field painting of metal fabrications.

1.2 REFERENCE STANDARDS

A. American Society for Testing and Materials (ASTM) Publications:

1. ASTM A36 - Carbon Structural Steel.
2. ASTM A123 - Zinc (Hot-Dip Galvanized) Coatings on Iron and Steel Products.
3. ASTM A283 - Low and Intermediate Tensile Strength Carbon Steel Plates, Shapes, and Bars.
4. ASTM A307 - Carbon Steel Bolts and Studs, 60,000 psi Tensile Strength.
5. ASTM A500 - Cold-Formed Welded and Seamless Carbon Steel Structural Tubing in Rounds and Shapes.
6. ASTM A501 - Hot-Formed Welded and Seamless Carbon Steel Structural Tubing.
7. ASTM A606 - Steel, Sheet and Strip, High Strength, Low Alloy, Hot Rolled and Cold Rolled with Improved Atmospheric Properties.

B. American Welding Society (AWS) Publications:

1. AWS A2.0 - Standard Welding Symbols.
2. AWS D1.1 - Structural Welding Code.

1.3 SUBMITTALS

A. Submit in accordance with Section 01 33 00 - Submittal Procedures:

1. Product data for basic materials.

2. Shop drawings:

a. Indicate shapes, sizes and fabrication and erection details.

b. Indicate welded connections using standard AWS A2.0 welding symbols. Include weld length.

PART 2 - PRODUCTS

2.1 MATERIALS FOR STEEL FABRICATIONS

A. Steel sections: ASTM A36.

B. Steel tubing: ASTM A500, Grade B and ASTM A501.

C. Steel plates: ASTM A283.

D. Steel pipe: ASTM A53, Type B, Schedule 40.

2.2 CONNECTION MATERIALS

A. Welding materials: AWS D1.1; type required for materials being welding.

B. Pop rivets, bolts, nuts, and washers: ASTM A307:

2.3 GENERAL FABRICATION

A. Grind exposed welds flush and smooth with adjacent finished surface. Ease exposed edges to small uniform radius.

B. Make exposed joints butt, flush, and hairline.

C. Supply components required for anchorage of metal fabrications. Fabricate anchorage and related components of same material and finish as metal fabrication, unless indicated otherwise on drawings.

D. Provide sleeves, inserts, and bolts required for attachment of fabricated and miscellaneous steel items.

E. Provide miscellaneous framing and supports which are not a part of structural steel framework but are required to complete the work.

F. Design connections and fabricate components to accommodate thermal expansion and contraction as required by Project conditions and as detailed on Drawings and approved shop drawings.

G. For exterior steel fabrications, ensure that exposed pipes and tubes are completely sealed to prevent water penetration and collection. Provide weep holes as required to protect against water collection on interior of tubing.

2.4 STEEL GATE

A. Type: Exterior hinged gate for dumpster enclosure.

B. Construction: Fabricated from tubular steel frame sections and steel plate infill panels of the sizes and designs shown on Drawings.

1. Perimeter frame: Fabricated from tubular steel sections of sizes indicated on Drawings and reviewed shop drawings with mitered corners and welded connections.

2. Infill panels: 14 gage steel sheet welded to back side of frame as detailed on Drawings and reviewed shop drawings.

C. Gate posts: Tubular steel of sizes indicated on Drawings and reviewed shop drawings.

1. Size gate posts to accommodate size and weight of hinged gate leaves.

2. After installation, fill gate posts with concrete.

3. Latching hardware: Sliding barrel bolt and keeper designed to receive padlock.

4. Cane bolt drop stop and concrete embedded pipe retainer: Provide for each gate leaf in both open and closed positions.

5. Provide anchors, embedment plates, and other devices required for mounting hardware on walls.

D. Gate hardware:

1. Acceptable manufacturers:

a. King Architectural Metals, Dallas, Texas; 800-542-2379; www.kingmetals.com.

b. Requests to use equivalent products of other manufacturers shall be submitted in accordance with Section 01 25 13 - Product Substitution Procedures.

2. Hinges: Heavy duty pin type barrel hinge; Model 44-2000- KONG King Kong Barrel Hinge as manufactured by King Architectural Metals.

a. 2 - ½ inch diameter barrel with 1 - 1/4 inch diameter stainless steel pin.

b. Weight capacity per pair of hinges: 3,000 pounds.

c. Installed distance between gate panel and gate post: 3 -3/4 inches.

3. Latching hardware: Sliding barrel bolt and keeper designed to receive Owner provided padlock.

4. Steel cane bolt drop stop and concrete embedded pipe retainer: Provide for each gate leaf in both open and closed positions.

5. Provide anchors, embedment plates, and other devices required erection of gates.

2.5 BICYCLE RACK

A. Type: Custom fabricated, single loop pipe design as detailed on Drawings and reviewed shop drawings.

B. Material: 2-3/8 inch diameter, Schedule 40 steel pipe, ASTM A53.

C. Nominal dimensions: 2'- 8-5/8" high with 1' - 7-1/4" radius.

D. Mounting: Provide 3/8 inch thick steel base plates welded to bottom ends of steel pipe loop to be anchored to concrete footing.

2.6 STEEL PIPE BOLLARDS

A. 4 inch diameter Schedule 40 steel pipe to be site filled with concrete.

B. Length: 36 inches projecting above finish grade with 30 inches minimum embedment in footing.

C. Weld four Nelson studs to embedment end of bollard.

2.7 CONCRETE BOLLARD ANCHORS

A. Provide anchors for precast concrete bollards specified in Section 03 48 00 - Precast Concrete Specialties and as detailed on Drawings and reviewed shop drawings.

B. Fabrication: 4 inch diameter Schedule 40 steel pipe to be site filled with concrete.

C.. Length: 24 inches long with 8 inch projection above concrete slab and 16 inch embedment in footing.

D. Weld Nelson studs to embedment end of anchor.

2.8 FINISHING

A. Field paint exposed to view metal fabrications.

B. Surface preparation: Clean surfaces of rust, scale, grease, and foreign matter.

C. Do not prime surfaces in direct contact with concrete or where field welding is required.

D. Prime paint specified items with one coat minimum 2 mils dry film thickness.

I

E. Shop or field paint metal fabrications in accordance with Section 09 91 00 - Painting.

PART 3 - EXECUTION

3.1 INSTALLATION

A. Coordinate provision of gates, bollards, anchors, bicycle rack, and other metal fabrications with casting of concrete slabs and footings specified in Section 03 30 00 - Cast-in-Place Concrete.

B. Steel pipe bollards: Set in 16 inch diameter by 24 inch deep footing. Embed pipe 20 inches minimum. Provide 3-inch minimum bottom concrete cover.

1. Completely fill pipe with concrete. Finish top with convex surface.

C. Concrete bollard anchors: Set in 14 inch diameter footing. Embed pipe anchor 16 inches minimum. Provide 3-inch minimum bottom concrete cover.

1. Completely fill steel pipe anchor with concrete. Finish top with flat, smooth surface.

D. Where concrete slab is cast around bollard, bicycle rack, and gate posts ,provide compressible joint material to provide bond breaker.

3.2 GATE INSTALLATION

A. Cast concrete gate post footings in accordance with Section 03 30 00 - Cast-In -Place Concrete.

1. Footing size: As indicated on Drawings and reviewed shop drawings with 6 inch minimum bottom concrete cover.

2. Set top of footing Flush with finish grade. Slope top of concrete for water runoff.

B. Cast concrete pipe retainers for cane bolt drop stops in both open and closed fate leaf positions.

C. Install gates on gate posts in accordance with gate hardware manufacturer recommendations.

D. Install hardware and adjust for smooth operation.

END OF SECTION

SECTION 05 51 35

ALUMINUM ACCESS LADDERS

PART 1 - GENERAL

1.1 SUMMARY

A. Section includes:

1. Fixed, wall mounted, vertical, aluminum, interior ladders providing access to roof hatches.

2. Fixed, wall mounted, vertical, aluminum exterior ladder with platform and return to provide access from one roof level to another.

B. Related sections:

1. Section 01 23 00 - Alternates: Additive Alternate No. 1 - Multi-Purpose Room including exterior roof ladder specified in this Section.

2. Section 06 10 00 - Rough Carpentry: Blocking in metal stud walls and partitions for anchorage of access ladders.

3. Section 07 72 33 - Roof Hatches: Manufactured roof hatches to be accessed by aluminum ladders.

1.2 REFERENCES

A. American National Standards Institute (ANSI):

1. ANSI A14.3 - Ladders, Fixed, Safety Requirements.

B. American Society for Testing and Materials (ASTM) Publications:

1. ASTM B209 - Aluminum and Aluminum-Alloy Sheet and Plate.

2. ASTM B221 - Aluminum-Alloy Extruded Bar, Rod, Wire, Shape, and Tube.

C. OSHA 1910.27 - Fixed Ladders.

1.3 SUBMITTALS

A. Provide in accordance with Section 01 33 00 - Submittal Procedures:

1. Product data for access ladders and accessories.

2. Shop drawings showing elevations, dimensions, connections, size and type of fasteners, and fabrication and installation details.

3. Installation and maintenance instructions.

1.4 QUALITY ASSURANCE

A. Access ladders shall be designed and installed to comply with ANSI A14.3 and OSHA 1910.27.

PART 2 - PRODUCTS

2.1 ACCEPTABLE MANUFACTURERS

A. ACL Industries, Inc., 179 Elm Street, Manchester, New Hampshire 03101; 603-668-1276; www.aclindustries.com.

B. Precision Ladders, LLC, Morristown, Tennessee; 423-586-2665; www.precisionladders.com.

C. Manufacturers of equivalent products submitted and approved in accordance with Section 01 25 13 - Product Substitution Procedures.

2.2 MATERIALS

A. Extruded aluminum: ASTM B221, Alloy 6063 Temper T-6, non-spark.

B. Sheet aluminum: ASTM B209 6063 Temper T-6.

C. Finish: Mill finished aluminum.

2.3 GENERAL FABRICATION

A. Field verify ladder dimensions prior to fabrication.

B. Fabricate to designs indicated on Drawings and to meet performance requirements specified in Paragraph 1.4.

C. Components shall be welded. Ladder shall not require field assembly.

2.4 INTERIOR ROOF HATCH LADDER

A. Type: Fixed, wall mounted, vertical, aluminum, interior heavy duty ladder providing access to roof hatch; Model No. ACL-200 as manufactured by ACL Industries, Inc.

B. Nominal height: As indicated on Drawings and reviewed shop drawings.

C. Side rails: 1-3/4 inch by 3 inch tubes with 1/8 inch wall thickness.

D. Rungs: 1-1/4 inch square tube by 18 inches long with corrugated surfaces and capable of 1,000 pound load. Space 12 inches on center. Attach rungs in centerline of side rails by welding.

2.5 EXTERIOR ROOF LADDER

A. Type: Fixed, wall mounted, vertical, aluminum, exterior heavy duty ladder with platform and return to provide access from one roof level to another; Model No. ACL-203 as manufactured by ACL Industries, Inc.

B. Nominal height: As indicated on Drawings and reviewed shop drawings.

C. Cross over span: As indicated on Drawings and reviewed shop drawings.

D. Side rails: 1-3/4 inch by 3 inch tubes with 1/8 inch wall thickness. Extend rails 42 inches above roof surface. Provide rails on opposite side mounted to rear of platform and extending 42 inches above platform and below platform to roof line.

E. Grab bars: Connect front and rear side rails with 4 pairs of 1-1/4 inch square tube grab bars with corrugated surfaces.

F. Platform: Provide cross over platform fabricated from 6 inch wide by 1-3/4 inch deep aluminum treads with corrugated surface.

G. Rungs: 1-1/4 inch square tube by 18 inches long with corrugated surfaces and capable of 1,000 pound load. Space 12 inches on center. Attach rungs in centerline of side rails by welding.

2.6 ACCESSORIES

A. Support brackets:

1. Wall brackets: Support ladder at top and bottom and at 48 inch maximum intermediate points with 2 by 1/4 inch minimum flat bar aluminum wall brackets. Allow 7 inch minimum clearance from wall to center line of rungs.

B. Safety post extension: Provide for fixed interior roof hatch ladder.

1. Fabrication: Constructed of tubular aluminum sections with adjustable mounting brackets for attachment to top of ladder.

2. Operation: Upward and downward movement controlled by spring balancing mechanism activated by release rod. Automatically locks when fully extended.

3. Permanently mount operating instructions on safety post to be plainly visible to ladder users.

PART 3 - EXECUTION

3.1 PREPARATION

A. Prior to fabrication, field verify required dimensions.

B. Coordinate provision of roof hatch access ladder with provision of roof hatch specified in Section 07 72 33 - Roof Hatches to ensure height and position of ladder are compatible with roof hatch curb.

C. Coordinate ladder installation with construction of wall construction to ensure adequate support and blocking for attachment of brackets and support of ladder.

D. Insulate dissimilar metals to prevent electrolysis with bituminous paint or non-absorptive isolation pad to prevent contact.

3.2 INSTALLATION

A. Install ladders in accordance with manufacturer's instructions and reviewed shop drawings.

B. Position ladder such that side rails end 3 inches above floor and center of rungs are 7 inches from wall.

C. Securely anchor support brackets with fasteners of type and size recommended by manufacturer. Place wall brackets at top and bottom of ladder. Place intermediate wall brackets at 48 inches maximum.

D. Ensure ladder is vertical, plumb, and rigid. Roof hatch ladder shall align with center of roof hatch.

E. Safety post extension: Attach to top 2 rungs of roof hatch ladder and centered between side rails. Adjust post to extend 42 inches above top rung when roof hatch is open and post is fully extended.

F. After installation, inspect ladder to verify proper, secure, and safe installation.

G. Clean ladder using clean water and mild detergent. Do not use abrasive agent, steel wool, or harsh chemicals. Rinse with clean water.

END OF SECTION

SECTION 06 10 00

ROUGH CARPENTRY

PART 1 - GENERAL

1.1 SUMMARY

A. Section includes: Concealed blocking, roof curbs, nailers, parapet sheathing, and fire and preservative wood treatments.

B. Related sections:

1. Section 06 40 00 - Architectural Woodwork: Shop fabricated casework.

2. Section 07 54 00 - Thermoplastic Membrane Roofing: Installation of roof curbs and nailers specified in this Section.

1.2 REFERENCES

A. American Wood Preservers Association (AWPA):

1. C1 - All Timber Products Preservative Treatment by Pressure Process.

2. C20 - Structural Lumber Fire Retardant Treatment by Pressure Process.

B. US Department of Commerce Voluntary Product Standards (VPS):

1. PSI - Construction and Industrial Plywood.

2. PS 20 - American Softwood Lumber Standard.

C. ASTM E84 - Test Method for Surface Burning Characteristics of Building Materials.

1.3 SUBMITTALS

A. Provide in accordance with Section 01 33 00 - Submittal Procedures:

1. Product data for lumber and wood treatments.

1.4 QUALITY ASSURANCE

A. Grade stamp shall be visible on wood products:

1. Lumber grading agency: Certified by American Lumber Standards Committee (ALSC)

2. Plywood grading agency: Certified by American Plywood Association (APA).

3. Fire retardant lumber: UL label.

2. In lieu of providing exposed to view lumber and panels with grade stamp, submit manufacturer's certificate that products meet specified grade.

B. Fire retardant treatment: Conform to Underwriters' Laboratories (UL) requirements.

1.5 HANDLING

A. Protect lumber from precipitation and other moisture during shipping, site storage, and installation. Replace or dry material that becomes wet. Ensure that maximum moisture content of lumber is below 19 percent prior to installation and covering with other materials.

B. Remove all preservative and fire-retardant treated wood scraps from site and dispose of legally. Do not burn wood scraps which will produce toxic smoke.

PART 2 - PRODUCTS

2.1 LUMBER

A. Lumber for furring, shimming, nailers, curbs, and blocking:

1. Type: PS-20, S4S.
2. Species: Pine, fir, or spruce.
3. Stress grade: Construction.
4. Maximum moisture content: 19 percent.

B. Exterior roof parapet sheathing: ½ inch thick APA Structural I, Exterior Grade CCX, pressure preservative treated plywood.

2.2 ACCESSORIES

A. Fasteners: Size and type to suit condition:

1. Galvanized: Exterior and high humidity conditions.
2. Plain: All other conditions.

B. Self-drilling screws: Bugle head, steel, power driven type.

C. Anchors: Size and type to suit condition.

1. Toggle bolt type: Anchorage to hollow masonry.
2. Expansion shield and lag bolt: Anchorage to solid masonry and concrete.
3. Bolts: Anchorage to steel.
4. Ballistic type: Anchorage of plates to concrete slabs.

2.3 WOOD TREATMENT

A. Preservative treated lumber:

1. Pressure treated, waterborne type complying with AWPA C2.
2. Treat roof system nailers, curbs, and other wood subject to exposure to moisture.

B. Fire retardant lumber:

1. Chemically treated and pressure impregnated in accordance with AWPA C20 and capable of providing a maximum flame spread of 25 and no significant progressive combustion.

2. Treat concealed blocking for metal studs, furring, nailers, curbs, and other items shown on Drawings or required by applicable codes and regulations.

C. Fire-retardant plywood:

1. Acceptable treatment manufacturer:

a. Hoover Treated Wood Products, Inc., Thomson, Georgia; 705-595-5059; www.frtw.com.

b. Requests to use equivalent products of other manufacturers shall be submitted in accordance with Section 01 63 00 - Product Substitution Procedures.

2. Treatment: Fire-retardant plywood shall be pressure impregnated with UL rated, fire retardant formulation free of halogens, sulfates, chlorides, phosphate, and formaldehyde; Pyro-Guard as manufactured by Hoover Treated Wood Products, Inc.

3. Plywood shall be kiln dried after treatment and bear KDAT (kiln dried after treatment) label.

4. Fire-retardant treated plywood characteristics:

a. Maximum flame spread: 25 and no significant progressive combustion tested in accordance with ASTM E84.

b. Equilibrium content: 38 percent maximum tested in accordance with ASTM D3201.

c. Moisture content: 15 percent maximum.

d. Fire-retardant plywood may be cut in any direction.

PART 3 - EXECUTION

3.1 BLOCKING

A. Coordinate requirements for blocking with other sections to ensure quantity, size, locations, and mounting heights are sufficient for support of cabinets, door stops and other hardware, toilet accessories, identifying devices, plumbing fixtures, and other wall mounted items.

B. Install prior to start of application of gypsum board and other sheathing.

D. Accurately cut blocking to fit tightly between studs and securely fasten with screws. Face of blocking shall align with face of studs.

3.2 ROOF NAILERS AND CURBS

A. Install preservative and fire-retardant treated nailers, and curbs as part of

Section 07 54 00 - Thermoplastic Membrane Roofing.

B. Provide wood curbs for all roof openings except where prefabricated curbs are specified.

C. Form corner of multiple member nailers and curbs by lapping alternate members.

3.3 ROOF SHEATHING

A. Install ½ inch thick, fire-retardant plywood on inside face of parapet walls as substrate to receive flexible base flashing specified in Section 07 54 00 - Thermoplastic Membrane Roofing.

END OF SECTION

SECTION 06 40 00

ARCHITECTURAL WOODWORK

PART 1 - GENERAL

1.1 SUMMARY

A. Section includes general requirements for provision of custom, shop fabricated casework and other architectural woodwork including:

1. Base and upper cabinets for Classrooms A and B.
2. Reception desk for Lobby.
3. Cabinet hardware.

B. Related sections:

1. Section 06 10 00 - Rough Carpentry: Plywood sheathing and blocking in stud partitions for anchoring casework and shelving.
2. Section 09 65 00 - Resilient Flooring: Rubber base for base cabinets.

1.2 REFERENCES

A. ANSI Z97.1 - Safety Performance Specifications and Methods of Test for Safety Glazing Material Used in Buildings.

B. ASTM B209 - Aluminum and Aluminum-Alloy Sheet and Plate.

C. ASTM E84 - Test Method for Surface Burning Characteristics of Building Materials.

D. International Code Council (ICC): ICC IBC: International Building Code.

E. Architectural Woodwork Institute (AWI): AWI Quality Standards.

F. FS MMM-A-130 - Adhesive, Contact.

G. National Electrical Manufacturers Association (NEMA): NEMA LD3 - High Pressure Decorative Laminates.

H. US Department of Commerce Voluntary Product Standards (VPS):

1. PS 1 - Construction and Industrial Plywood.
2. PS 20 - American Softwood Lumber Standard.
3. PS 51 - Hardwood and Decorative Plywood.
4. PS 58 - Basic Hardwood.

1.3 QUALITY ASSURANCE

A. Perform work to Custom Grade in accordance with AWI 400.

B. Fabricator: Company specializing in manufacture of custom casework with minimum five years successful experience.

1.4 SUBMITTALS

A. Submit in accordance with Section 01 30 00 - Submittal Procedures:

1. Product data for plastic laminate, adhesives, hardware, and other materials.

2. Shop drawings indicating materials, dimensions, component profiles, assembly methods, joint details, fastening methods, hardware, and finishes.

3. Samples:

a. Plastic laminates in selected colors.

b. Hardware.

c. Natural wood finish: Three 12 by 12 inch minimum size pieces of lumber taken from inventory being used for architectural woodwork with factory applied clear finish. Samples shall be indicative of color and pattern range.

(1) Samples are not to be part of constructed work.

(2) Use accepted samples as standard for finishing actual work.

PART 2 - PRODUCTS

2.1 MATERIALS

A. Softwood lumber: PS 20, graded in accordance with AWI, maximum moisture content of 6 percent.

B. Hardwood lumber: FS MM-L-736, graded in accordance with AWI, maximum moisture content of 6 percent, species as designated by Architect.

C. Panel material:

1. Exposed surfaces with natural wood finish: Hardwood plywood, PS51, graded in accordance with Baltic birch hardwood veneer complying with HPVA Grade A.

a. Veneer leaves shall be book matched.

b. Edges: Fit doors, drawer fronts, shelves, and other exposed edges with matching solid birch edging. Use full length pieces only.

2. Work surfaces and counter tops: Plywood core with plastic laminate finish. Use exterior grade plywood for counter tops with sinks.

3. Door, drawer, and other cabinet panels where hinges and pulls are attached: Plywood.

4. Other semi-exposed and concealed panels: Plywood or medium density fiberboard (MDF) with 40 pounds per cubic foot minimum density.

D. Adhesive: FS MMM-A-130, types as recommended by manufacturers of materials to be adhered as appropriate for substrate to receive material.

2.2 PLASTIC LAMINATE

A. Acceptable manufacturer:

1. Abet Laminati, Englewood, New Jersey; 800-228-2238; www.abetlaminati.com.

2. Formica Corporation, Cincinnati, Ohio; 800-367-6422.

3. Nevamar Decorative Surfaces, Odenton, Maryland; 800-638-4380; www.nevamar.com.

4. Willoughby Industries, Indianapolis, Indiana; 800-428-4065.

5. Wilsonart International, Inc., Temple, Texas; 800-433-3222; www. wilsonart.com.

6. Requests to use equivalent products of other manufacturers shall be submitted in accordance with Section 01 25 13 - Product Substitution Procedures. Architect reserves right to reject proposed substitutions on basis of color and pattern compatibility even though fabrication and materials are equivalent.

B. Plastic laminate: NEMA LD 3, General Purpose GP-50. Colors and panels selected by Architect from manufacturer's full range.

C. Laminate backing sheet: LD-3 BK20 backing grade, undecorated plastic laminate.

2.3 SOLID PLASTIC SURFACING

A. Acceptable manufacturers:

1. Formica Corporation, Cincinnati, Ohio; 800-367-6422.

2. Manufacturers of equivalent products submitted and approved in accordance with Section 01 25 13 - Product Substitution Procedures. Architect reserves right to reject proposed substitutions on basis of color and pattern compatibility even though fabrication and materials are equivalent.

B. Material: Solid, non-porous, homogenous, sheet plastic; Surell as manufactured by Formica Corporation.

1. Thicknesses: ½ and 3/4 inch.

2. Stain and chemical resistant.

3. Class I flammability rating.

4. Color stable.

2.4 HARDWARE

A. Acceptable manufacturers:

1. Accuride International, Inc. Santa Fe Springs, California; 888-459-8624.

2. Grant Hardware Company, West Nyack, New York: 914-358-4400.

3. Stanley Access Technologies, Farmington, Connecticut; 800-722-2377; www.stanleyaccesstechnologies.com.

4. Knape and Vogt Manufacturing Company, Grand Rapids, Michigan; 800-253-1561; www.knapeandvogt.com.

5. Hafele American Company, Archdale, North Carolina; 800-334-1873.

6. Hunt Corporation, Philadelphia, Pennsylvania; 215-656-0300.

7. HEWI, Inc., Columbia, Pennsylvania; 217-285-4088; www.hewi.com.

8. Requests to use equivalent products of other manufacturers shall be submitted in accordance with Section 01 25 13 - Product Substitution Procedures.

B. Drawer and door pulls: Loop type, 9/16 inch diameter material as manufactured by HEWI, Inc.

C. Cabinet hinges: Concealed when door is closed, self-closing, 175 degree opening, suitable for overlap cabinet doors, steel with bright nickel finish, Stanley 1511.

D. Magnetic door catches.

E. Self adhering felt silencers.

F. Cabinet shelf hardware:

1. Shelf standards: Heavy duty, 12 gage steel channel standard with slots to receive brackets and pre-drilled for screw attachment; Model 87 ANO as manufactured by Knape and Vogt.

2. Shelf brackets: Heavy duty, L shaped steel brackets, with tabs to fit standard slots; Model 187LL ANO as manufactured by Knape and Vogt.

3. Shelf fasteners: T shaped steel fastener to secure shelf to bracket; Model 154 ANO as manufactured by Knape and Vogt.

G. Drawer slides: Extension type, cold rolled steel, ball bearing action as manufactured by Accuride International, Inc.:

1. Full extension for file drawers.

2. Partial extension of drawer depth minus 5 inches for other applications.

3. Load capacity to fit specific application.

H. File inserts: Provide file drawers with metal inserts to hold file folders vertically.

I. Locks: 5 disc tumbler locks keyed alike each room and master keyed. Dull chrome finish on doors and drawers.

J. Wire access grommets: Round 2 inch diameter as manufactured by Hafele American Company.

2.5 FABRICATION

A. Shop assemble casework for delivery to site in units easily handled and to permit passage through building openings.

B. When necessary to cut and fit on site, provide materials with ample allowance for cutting. Provide trim for scribing and site cutting.

C. Coordinate openings for sinks, fixtures, appliances, and equipment indicated on Drawings. Provide filler panels as required to close openings around installed items.

D. Provide cutouts for plumbing fixtures, wire access grommets, inserts, appliances, outlet boxes, hardware, and other fittings.

E. Minimum panel thickness:

1. Door and drawer fronts, cabinet sides, shelves: 3/4 inch.

2. Drawer sides, bottoms, and backs: ½ inch.

3. Counter tops: Two 3/4 inch panels providing 1-1/2 inches front edge.

4. Cabinet backs: 1/4 inch.

F. Cabinet shelving: Adjustable with recessed shelf brackets and rests.

[G. Counter tops: Mechanically fasten backsplashes to counter tops with steel brackets. Fabricate in lengths sufficient to eliminate joints in plastic laminate finish.]

H. Counter tops and work surfaces: ½ inch thick solid plastic surfacing adhered over 3/4 inch thick plywood.

1. Provide tops with integral backsplashes where top intersects vertical wall surfaces.

2. Mechanically fasten backsplashes to counter tops with steel brackets.

3. Fabricate tops in lengths sufficient to eliminate joints in plastic surfacing finish.

H. Locks: Provide keyed locks on cabinet doors and drawers as designated by Architect.

2.6 FINISHING

A. Provide types of finishes listed below and as designated on Drawings.

B. Stained wood finish: Factory finish exposed-to-view woodwork surfaces with stain and clear sealer as specified in Section 09 91 00 - Painting. Do not start finishing until finish samples have been submitted and approved.

C. Plastic laminate finish: Factory apply general purpose plastic laminate to all counter tops, work surfaces, shelving, and other woodwork indicated to be finished with plastic laminate.

1. Factory apply general purpose plastic laminate to all exterior cabinet surfaces.

a. Apply laminate in full sheets with no exposed-to-view joints.

b. Corner and butt joints to be hairline.

c. Apply laminate backing sheet to reverse side of plastic laminate finished surfaces.

2. Interiors of cabinets and drawers are to be prefinished with white polyester overlay.

3. Cap exposed edges of shelves and other components with matching plastic laminate.

PART 3 - EXECUTION

3.1 INSTALLATION

A. Verify adequacy of blocking and support framing.

B. Set and secure casework in place rigid, plumb, and level.

C. Secure cabinet bases to floor using appropriate angles and anchorages.

D. Use fixture attachments at concealed location for wall mounted components.

E. Counter-sink wall anchorage devices at exposed locations and conceal with solid plugs flush with surrounding surfaces and finished to match surrounding finish.

F. Use threaded steel concealed joint fasteners to align and secure adjoining cabinet units.

G. Carefully scribe casework which is against other building materials, leaving minimum gaps. Do not use additional overlay trim for this purpose.

3.2 ADJUSTING AND CLEANING

A. Adjust doors, drawers, hardware, fixtures, and other moving or operating parts to function smoothly and correctly.

B. Clean casework, hardware, fittings, and fixtures.

END OF SECTION

SECTION 07 14 00

FLUID APPLIED WATERPROOFING

PART 1 - GENERAL

1.1 SUMMARY

A. Section includes cold applied liquid elastomeric membrane waterproofing for concrete planter walls. Includes preparation of concrete surfaces, primer, liquid membrane, mastic, and protection board.

B. Related sections:

1. Section 03 30 00 - Cast-in-Place Concrete and Section 03 35 20 - Architectural Concrete Wall Finish: Construction of concrete planter walls.

2. Division 31 - Earthwork: Excavation and backfilling for concrete site walls.

1.2 REFERENCES

A. ASTM C836 - High Solids Content, Cold Liquid-Applied Elastomeric Waterproofing Membrane for Use with Separate Wearing Course, Dampproofing, and Waterproofing.

B. ASTM D412 - Rubber Properties in Tension.

C. ASTM D2240 - Rubber Property - Durometer Hardness.

D. ASTM E96 - Water Vapor Transmission of Materials.

1.3 SUBMITTALS

A. Provide in accordance with Section 01 33 00 - Submittal Procedures:

1. Product data for waterproofing materials and protection board.

2. Manufacturer's installation instructions.

1.4 ENVIRONMENTAL REQUIREMENTS

A. Do not apply during inclement weather.

B. Apply when ambient temperature is between 40 and 90 degrees F.

C. Maintain ambient and surface temperatures above 40 degrees F before, during, and after application until waterproofing has cured.

PART 2 - PRODUCTS

2.1 ACCEPTABLE MANUFACTURERS

A. BASF Construction Chemicals - Building Systems, Shakopee, Minnesota; 800-433-9517; www.buildingsystems.basf.com.

B. Requests to use equivalent products of other manufacturers shall be submitted in accordance with Section 01 25 13 - Product Substitution Procedures.

2.2 WATERPROOFING

A. Waterproofing membrane: One component, cold applied, moisture curing, bitumen-modified polyurethane elastomeric liquid compound complying with ASTM C836; Sonoshield HLM 5000 as manufactured by BASF Construction Chemicals - Building Systems.

B. Cured membrane characteristics when tested in accordance with the following standards:

1. Tensile strength tested in accordance with ASTM D412: 150 PSI.

2. Average elongation tested in accordance with ASTM D412: 600 percent.

3. Hardness tested in accordance with ASTM C836: 85 Shore 00.

4. Moisture vapor permeability tested in accordance with ASTM E96: 0.1 dry perms.

5. Minimum recovery: 90 percent.

C. Service range: Minus 40 degrees F to plus 150 degrees F.

D. Maximum VOC content: 1.6 pounds per gallon.

2.3 PROTECTION BOARD

A. ½ inch minimum asphalt wood fiberboard.

PART 3 - EXECUTION

3.1 PREPARATION

A. Inspect concrete planter wall surfaces to ensure that concrete surfaces are solid, free of oil, form release agents, curing compounds, frozen matter, loose particles, cracks, pits, rough projections, and foreign matter detrimental to adhesion and application of waterproofing.

B. Clean and prepare surfaces to receive waterproofing in accordance with manufacturer's instructions.

C. Open air-void pockmarks or honeycomb such that waterproofing compound completely fills cavities. Avoid air entrapment that may cause blisters.

D. Expansion and control joints: Seal joints greater than 1/8 inch with sealant as recommended by waterproofing manufacturer. Route control joints less than 1/8 inch to 1/8 inch minimum and fill with sealant. Prevent waterproofing membrane from adhering to sealant by applying wax coat or teflon tape.

E. Apply waterproofing compound with trowel or stiff brush to seal small cracks, penetrations, small cracks, and honeycomb in substrate. Allow to dry overnight.

3.2 APPLICATION

A. Apply waterproofing to interior face of concrete planter walls in accordance with manufacturer's instructions.

B. Apply one coat of waterproofing with trowel, spray, or roller in continuous and uniform rate of 1 gallon per 25 square feet to achieve minimum membrane thickness of:

1. Wet: 55 mils.

2. Cured dry: 45 mils.

C. Fill all cracks, crevices, and grooves. Ensure coating is continuous and free from breaks and pinholes. Avoid air pockets.

D. Seal items projecting through waterproofing surface with compound.

E. Completely cover below grade surfaces of walls. Extend to final finish grade.

3.3 FIELD QUALITY CONTROL

A. Before waterproofing attains final set, verify applied thickness with gage in accordance with ASTM D4414. Take random readings. Where readings indicate thickness less than 55 mils, immediately apply additional waterproofing.

3.4 PROTECTION

A. Protect membrane from damage by immediately adhering protection board applied with compound over waterproofing surface. Scribe and cut boards around projections and interruptions.

B. Neatly fit boards tight around pipe and other projections.

C. Backfill excavation for concrete planter walls in accordance with Division 31- Earthwork.

END OF SECTION

SECTION 07 21 00

BUILDING INSULATION

PART 1 - GENERAL

1.1 SUMMARY

A. Section includes:

1. Rigid board perimeter foundation insulation.

2. Foil-faced thermal blanket insulation installed in metal stud exterior walls and roof spaces above suspended ceilings.

3. System of vinyl faced and unfaced thermal blanket insulation for exposed roof structure of Multi-Purpose Room.

4. Unfaced thermal blanket insulation for:

   a. Filling perimeter window and door shim spaces and voids in exterior walls, soffits, and roof assemblies.

   b. Acoustical insulation in interior partitions.

B. Related sections:

1. Section 01 23 00 - Alternates: Additive Alternate for Multi-Purpose Room.

2. Section 05 12 00 - Structural Steel and Section 05 40 00 - Lightgage Steel Framing: Steel stud framing for exterior walls.

3. Section 07 28 00 - Thermal and Air Barrier Wall System: System of exterior polyisocyanurate insulation sheathing installed on these exterior metal stud walls:

   a. Walls with cement plaster (stucco) finish specified in Section 09 24 00 - Portland Cement Plaster..

   b. Walls with metal panel finish specified in Section 07 42 13 - Metal Wall Panels.

4. Section 07 54 00 - Thermoplastic Membrane Roofing: Flat and tapered rigid polyisocyanurate thermal insulation installed beneath roof membrane to provide roof drainage.

5. Section 07 92 00 - Joint Sealants: Acoustical sealant.

6. Section 09 21 16 - Gypsum Board Assemblies: Interior partitions and to receive acoustical insulation.

1.2 REFERENCES

A. ASTM C665 - Mineral Fiber Blanket Thermal Insulation for Light Frame Construction and Manufactured Housing.

B. ASTM D1621 - Compressive Properties of Rigid Cellular Plastics.

C. ASTM E84 - Test Method for Surface Burning Characteristics of Building Materials.

1.3 SUBMITTALS

A. Provide in accordance with Section 01 33 00 - Submittal Procedures:

1. List of proposed products and data indicating characteristics, performance criteria, and limitations.

2. Shop drawings detailing special conditions for installation of thermal insulation.

3. Certificates stating compliance with specified requirements.

4. Manufacturers' installation and maintenance instructions.

1.4 HANDLING

A. Deliver materials to Site in manufacturers' labeled, unopened, undamaged packaging.

B. Store in warm, dry location. Protect materials from moisture before, during, and after installation. Protect from damage, contamination, and deterioration.

PART 2 - PRODUCTS

2.1 PERIMETER BOARD INSULATION - EXTRUDED POLYSTYRENE

A. Type: Extruded cellular polystyrene insulation board, ASTM C578 Type IV.

B. Minimum thickness: 2 inches.

C. Board size: 24 by 96 inches or as required to fit project conditions.

D. Minimum compressive strength: 25 PSI tested in accordance with ASTM D1621.

E. Maximum water absorption: 0.1 percent by volume in accordance with ASTM C272.

F. Minimum thermal resistance, R value, per inch thickness tested in accordance with ASTM C518:

1. At 40 degrees F: 5.4.

2. At 75 degrees F: 5.0.

G. Maximum flame spread: 25 tested in accordance with ASTM E84.

H. Maximum smoke development: 450 tested in accordance with ASTM E84.

I. Edge: Square.

2.2 WALL THERMAL BLANKET INSULATION

A. Type: Preformed glass fiber thermal blanket, friction fit; ASTM C665, Type II.

B. Facing: Scrim reinforced, foil faced reflective covering one side. Flame resistant with flame spread rating less than 25. Provide facing flanges for continuity of vapor barrier.

C. Maximum vapor permeability rating: 1.0 grains/hour/SF.

D. Width: 16 inches.

E. Minimum thermal resistance, R value: 38 .00.

F. Thickness: As required for specified thermal resistance.

2.3 ROOF THERMAL BLANKET INSULATION

A. Type: Pre-formed glass fiber thermal blanket; ASTM C 665, Type III.

B. Facing covering one side: Scrim reinforced, 0.0003 inch aluminum foil laminated to 30 pound Kraft paper reflective covering; FRK Silver NAIMA as manufactured by Owens-Corning Fiberglas.

1. Type Flame resistant with flame spread rating less than 25.

2. Provide facing flanges for continuity of vapor barrier.

3. Maximum vapor permeability rating: 0.05 grains/hour/SF.

C. Size: 48 inch wide roll. Use maximum possible lengths.

D. Thickness: As required for specified thermal resistance.

E. Minimum thermal resistance, R value: 38.00.

2.4 MULTI-PURPOSE ROOM ROOF THERMAL BLANKET INSULATION

A. Type: System of vinyl faced and unfaced thermal blanket insulation for exposed bar joist and steel deck roof structure of Multi-Purpose Room.

B. Faced blanket insulation:

1. Facing: 0.0032 inch white vinyl adhered to fiberglass blanket; .0032 Vinyl Certified R NAIMA as manufactured by Owens-Corning Fiberglas.

a. Flame spread rating: Less than 25.

b. Maximum vapor permeability rating: 1.0 grains/hour/SF.

2. Size: 48 inch wide roll. Use maximum possible lengths.

3. Thickness: As required for specified thermal resistance.

C. Unfaced blanket insulation: Fiberglass blankets, ASTM C553, Type I.

1. Minimum thickness: 3-1/2 inches minimum.

2. Width: As required to fit bar joist roof spacing.

3. Thickness: As required for specified thermal resistance.

D. Minimum R value thermal resistance for total system of faced and unfaced insulation blankets.: 38.00.

E. Spacer blocks: 3/4 inch thick high density extruded polystyrene board stock strips by width required to extend across top flange of roof purlins.

2.5 ACOUSTICAL INSULATION

A. Type: Unfaced fiberglass insulation sound control blankets, ASTM C553, Type I.

B. Minimum thickness: 3-1/2 inches minimum.

C. Width: As required to fit stud spacing and cells of acoustical metal deck.

2.6 ACCESSORIES

A. Tie wire: 18 gage black annealed wire.

B. Adhesive: Type recommended by insulation manufacturer for application, type of insulation, and substrate. Insulation adhesives used in interior location must meet the requirements of the California Department of Health Services Standard Practice for the Testing of Volatile Organic Emissions From Various Sources Using Small-Scale Environmental Chambers, including 2004 Addenda.

C. Tape: Bright aluminum, self-adhering type, mesh reinforced, 2 inches wide.

D. Wire mesh: Galvanized steel, hexagonal mesh.

PART 3 - EXECUTION

3.1 PREPARATION

A. Verify substrate and adjacent materials are dry and ready to receive insulation.

B. Verify mechanical and electrical services within walls and ceilings have been installed and tested.

3.2 INSTALLATION OF PERIMETER INSULATION

A. Coordinate installation of perimeter insulation with casting of concrete foundations specified in Section 03 30 00 - Cast-in-Place Concrete.

B. Install 2 inch minimum thickness of extruded polystyrene rigid board as perimeter insulation.

C. Install with adhesive on foundation stem walls and elsewhere as required to complete thermal barrier at perimeter of building.

D. Butt edges and ends tight to adjacent boards and to protrusions.

3.3 INSTALLATION OF THERMAL BLANKET INSULATION

A. Install thermal blanket insulation in exterior walls and roof and soffit spaces indicated on Drawings without gaps or voids.

B. Trim insulation neatly to fit spaces.

C. Fit insulation tight in spaces and tight to exterior side of mechanical and electrical services within plane of insulation. Leave no voids around utility services.

D. Install insulation with vapor barrier facing on warm side of building spaces.

E. Exterior metal stud walls:

1. Pressure fit blankets between studs.

2. Maintain vapor barrier by tape sealing joints, tears, and cuts in insulation facing.

3. Extend vapor and air barrier tight to full perimeter of adjacent door and window frames and other items interrupting the plane of membrane. Tape seal in place.

F. Roof and soffit structure:

1. Install insulation blankets between joists and other framing members and tight against roof deck.

2. Retain insulation blankets firmly in place with wires running perpendicular to insulation at 24 inches maximum and securely attached to joists.

3. Tape seal joints between blankets.

G. Where blanket insulation is placed in voids without studs or framing members, retain with wire mesh.

H. Tape seal tears and cuts in vapor barrier facing.

I. Upon completion of installation, inspect and verify there are no insulation voids and vapor barrier is continuous and sealed.

J. Prevent displacement of blanket insulation until gypsum board, ceilings, and other finishes are installed.

3.4 INSTALLATION OF THERMAL BLANKETS IN MULTI-PURPOSE ROOM ROOF

A. Coordinate with installation of steel roof deck specified in Section 05 30 00 - Metal Decking.

B. Install thermal blanket roof insulation after roof purlins have been installed and prior to installation of steel roof decking.

C. If exposed roof purlins and other structural members are to be field painted, delay installing insulation until field finishes have been applied..

D. Install double layer system of blanket insulation supported over roof purlins:

1. Install thermal spacer blocks across top flange of purlins to eliminate cold gaps.

2. Place layer of approximately 3 inches thick, vinyl faced thermal insulation over purlins from room side to side in continuous unbroken lengths to extent possible. Allow blanket to drape between purlins.

3. Install second layer, approximately 6 inches thick, unfaced blanket between purlins and supported by first layer of insulation. Fit tight between purlins.

4. Install approximate 9 inches total thickness to provide R value of 38.00.

E. Upon completion of installation, inspect and verify there are no insulation voids and vapor barrier is continuous and sealed.

F. Prevent displacement of blanket insulation until metal panels and other finishes are installed.

3.5 ACOUSTICAL INSULATION

A. Install acoustical insulation in interior partitions indicated on Drawings.

B. Place acoustical insulation in partitions tight within spaces, around openings, behind and around electrical and mechanical items within partitions, and tight to items passing through partitions.

C. Install acoustical sealant within partitions and around penetrations in accordance with manufacturer's instructions.

END OF SECTION

SECTION 07 28 00

THERMAL AND AIR BARRIER WALL SYSTEM

PART 1 - GENERAL

1.1 SUMMARY

A. Section includes: System of exterior polyisocyanurate insulation sheathing (Identified on Drawings as "POLY-ISOCYANURATE INSULATION BOARD") installed on these exterior metal stud walls:

1. Walls with cement plaster (stucco) finish.

2. Walls with metal panel finishes.

B. Related sections:

1. Section 05 12 00 - Structural Steel and Section 05 40 00 - Lightgage Steel Framing: Steel stud framing of exterior walls.

2. Section 07 42 13 - Metal Wall Panels: Flat steel plate panels installed on metal studs over thermal and air barrier system specified in this Section.

3. Section 09 24 00 - Portland Cement Plaster: Stucco finish system installed on metal studs over thermal and air barrier system specified in this Section.

1.2 REFERENCES

A. ASTM C203 - Test Methods for Breaking Load and Flexural Properties of Block-Type Thermal Insulation.

B. ASTM C209 - Test Method for Cellulosic Fiber Insulating Board.

C. ASTM C518 - Steady-State Thermal Transmission Properties by Means of the Heat Flow Meter Apparatus.

D. ASTM C645 - Non-Load (Axial) Bearing Steel Studs, Runners (Track), and Rigid Furring Channels for Screw Application of Gypsum Board.

E. ASTM C1289 - Faced Rigid Cellular Polyisocyanurate Thermal Insulation Board.

F. ASTM D1621 - Test Method for Compressive Properties of Rigid Cellular Plastics.

G. ASTM E84 - Test Method for Surface Burning Characteristics of Building Materials.

H. ASTM E96 - Test Method for Water Vapor Transmission of Materials.

I. ASTM E331 - Test Method for Water Penetration of Exterior Windows, Curtain Walls, and Doors by Uniform Static Air Pressure Difference.

J. ASTM E2357 - Test Method for Determining Air Leakage of Air Barrier Assemblies.

K. National Fire Protection Association (NFPA):

1. NFPA 285 - Standard Method of Test for the Evaluation of Flammability Characteristics of Exterior Non-Load Bearing Wall Assemblies Containing Combustible Components Using the Intermediate-Scale, Multistory Test Apparatus.

L. Underwriters Laboratories, Inc, (UL):

1. UL 723 - Surface Burning Characteristics of Building Materials.

1.3 SYSTEM DESCRIPTION AND PERFORMANCE

A. Thermal and air barrier system shall control thermal, air, and water penetration and provide continuity of building envelope and shall include:

1. Insulating sheathing secured to exterior of metal stud framing.

2. Joint, penetration, and gap sealing materials.

B. Performance characteristics:

1. Polyisocyanurate exterior board thermal aged R value: 6 per inch at 6 month exposure tested in accordance with ASTM C518.

2. System air infiltration: 0.04 CFM per square foot of fixed wall area tested in accordance with ASTM E2357 at sustained wind loading of 12.5 PSF for one hour.

3. System water penetration: No measurable penetration tested in accordance with ASTM E331 at 6.24 PSF for 2 hours minimum duration.

4. Mold resistance: System components shall not provide food source for fungal growth.

5. Fire resistance: System shall comply with NFPA 285.

6. All joints, penetrations, and gaps of thermal and air barrier system shall be made water and air tight.

1.4 SUBMITTALS

A. Provide in accordance with Section 01 33 00 - Submittal Procedures:

1. Product data indicating characteristics, performance criteria, and limitations.

2. Test reports verifying system and components meet or exceed specified requirements.

3. Shop drawings detailing installation of system including layout, anchorage, flashing, and sealing joints.

4. Certificate from manufacturer stating compliance with specified requirements and verifying registration of installer.

5. Samples:

   a. 12 by 12 inch minimum sample of insulating sheathing board.

   b. One sample of each type of fastener.

   c. 6 inch length of flashing tape.

6. Manufacturer's installation instructions.

7. Copy of warranty required by Paragraph 1.9 for review by Architect.

1.5 QUALITY ASSURANCE

A. Thermal and air barrier system shall comply with:

1. UL723 and ASTM E84 for Class 1 fire performance.

2. ASTM E2357 for air leakage.

3. NFPA 285.

B. Installer qualifications: Firm experienced in applying thermal and air barrier system and acceptable to system manufacturer.

1. Supervisor: Work shall be supervised by individual accredited by system manufacturer. Supervisor shall carry photo-identification card issued by system manufacturer.

2. Each worker installing system shall be accompanied by certified installer. Each certified installer shall supervise five workers maximum.

1.6 PRODUCT HANDLING

A. Deliver materials to site in manufacturer's labeled, unopened, undamaged containers.

B. Store in warm, dry location. Do not allow material to become moist. Protect from damage, contamination, and deterioration.

1.7 ENVIRONMENTAL REQUIREMENTS

A. Perform work when weather conditions comply with manufacturer's environmental requirements.

1.8 PRE-INSTALLATION CONFERENCE

A. In accordance with Section 01 31 00 - Project Management and Coordination convene a pre-installation conference prior to commencing work of this Section.

B. Attendance: Contractor, certified installer, and representatives of Architect, Owner, and subcontractors of other trades as appropriate to work of this Section.

C. Review:

1. Preparedness of metal stud wall framing.

2. Thermal and air barrier system installation procedures.

3. Coordination with installation of window and door assemblies and other work.

4. Required penetrations through system.

5. Availability of thermal and air barrier system materials.

6. Applicable regulatory requirements.

7. Field quality control procedures.

8. Weather conditions forecast.

1.9 WARRANTIES

A. Provide under provisions of Section 01 78 00 - Closeout Submittals:

1. Manufacturer's 6-month exposure and 15-year thermal warranty for exterior insulation.

PART 2 - PRODUCTS

2.1 ACCEPTABLE MANUFACTURERS

A. Dow Chemical Company, Midland, Michigan; 866-583-2583; www.dowbuildingsolutions.com.

B. Johns Manville, Denver, Colorado; 899-654-3103; www.specjm.com.

C. Requests to use equivalent products of other manufacturers shall be submitted in accordance with Section 01 25 13 - Product Substitution Procedures.

2.2 MATERIALS

A. Exterior insulation: Uniform closed-cell polyisocyanurate foam core sheathing board faced on one side with reflective foil facer and white non-reflective foil facer on other side complying with ASTM C1289; AP Foil Faced Foam Sheathing Board as manufactured by Johns Manville.

1. Size: 4 feet wide by either 8, 10, or 12 feet long with square edges.

2. Thickness: 1 - ½ inches.

3. Thermal resistance R-value: 9 minimum.

4. Compressive strength: 16 PSI minimum tested in accordance with ASTM D1621.

5. Flexural strength: 40 PSI tested in accordance with ASTM C203.

6. Water absorption: 1.0 percent by volume tested in accordance with ASTM C209.

7. Water vapor permeance: 0.3 perms maximum tested in accordance of ASTM E96.

8. Maximum use temperature: 250 degrees F.

B. Accessories:

1. Z furring channels: Rolled formed, galvanized sheet steel channel with Z profile, 1-1/2 inches deep and complying with ASTM C645.

2. Fasteners: Provide corrosion resistant coated steel screw fasteners of type, size, and spacing recommended by thermal and air barrier manufacturer.

3. Insulation flashing tape: 4 inches wide with butyl rubber adhesive tape.

4. Wall opening flashing: 6 and 9 inch wide tape with butyl rubber adhesive for sealing window and door openings.

5. Penetration filler: Single component polyurethane insulating foam sealant.

6. Gap air infiltration filler: Two component, quick-cure polyurethane foam complying with NFPA 286 and ASTM E84 Class A.

7. Gasketing: Flexible polyethylene foam gasketing strip.

PART 3 - EXECUTION

3.1 PREPARATION

A. Coordinate application of thermal and air barrier system with installation of mechanical equipment, piping, light fixtures, conduit, and other components installed in exterior walls.

B. Inspect metal stud framing, opening frames, bridging, bracing, and other support members, and anchorage. Verify wall framing has been properly installed and conditions are acceptable for application of thermal and air barrier system. Report deficiencies and do not proceed unit until deficiencies have been addressed.

C. Verify items penetrating wall system are placed, secured, and properly sealed.

3.2 INSTALLATION OF EXTERIOR INSULATION

A. Install polyisocyanurate insulation board on steel wall studs in accordance with manufacturer's instructions and reviewed shop drawings.

B. Use Z furring channels to install panels horizontally and with reflective foil facer facing to exterior.

C. Use maximum lengths to minimize joints. Locate end joints parallel to and on stud framing. Stagger end joints. Provide additional framing where panel joints do not bear against framing.

D. Install flashing joint tape at end and edge of panel joints.

E. Install flashing tape behind mechanical fastened wall finish assemblies.

F. Seal penetrations through exterior insulation and at intersections with adjacent materials.

G. At bottom of wall, install sheet metal flashing or metal termination bar running horizontally on exterior of insulated sheathing. Apply flashing tape to the exterior sheathing and lapping over base flashing as detailed on reviewed shop drawings.

H. Field quality control:

1. Manufacturer's certified installer as required by Paragraph 1.5.B.1 shall inspect and test work daily and prepare Daily Work Record, documenting results of inspecting and testing. Records shall be kept on site for routine review. Copies of Records shall be submitted to manufacturer and Architect.

2. All failures determined by testing shall be corrected and repaired as determined by thermal and air barrier manufacturer. Corrected areas shall be re-tested and reports submitted.

END OF SECTION

SECTION 07 42 13

METAL WALL PANELS

PART 1 - GENERAL

1.1 SUMMARY

A. Section includes: Wall cladding system consisting of flat steel wall panels installed with concealed fasteners on steel furring over underlayment and insulating sheathing anchored to steel stud exterior wall framing, System includes:

1. Weather and water resistant underlayment (Identified on Drawings as "VAPOR BARRIER").

2. Metal Z channel furring.

3. Modular, shop fabricated flat steel panels.

B. Related sections:

1. Section 05 12 00 - Structural Steel and Section 05 40 00 - Light Gauge Steel Framing: Steel stud framing for exterior walls to receive metal wall panel system.

2. Section 07 28 00 - Thermal and Air Barrier Wall System: Polyisocyanurate insulation sheathing board with water and air barrier facing installed as substrate for metal wall panel system.

3. Section 07 62 00 - Sheet Metal Flashings and Trim: General requirements for fabricating sheet metal flashings, parapet cap, and trim for metal wall panel system.

4. Section 07 92 00 - Joint Sealants: Sealants used in conjunction with metal wall panels.

1.2 REFERENCES

A. American Society for Testing and Materials:

1. ASTM A755 - Specification for Steel Sheet, Zinc-coated (Galvanized) or Zinc-Iron Alloy-Coated (Galvannealed) by the Hot-Dip Process.

1.3 PERFORMANCE REQUIREMENTS

A. Provide and install steel wall cladding system to:

1. Adequately resist wind forces and uplift for Project location.

2. Accommodate movement of steel cladding components without undue stress on fasteners or other detrimental effects, when subjected to seasonal temperature range of 175 degrees F.

3. Accommodate tolerances of support structure.

1.4 SUBMITTALS

A. Provide in accordance with Section 01 33 00 - Submittal Procedures:

1. Product data for steel wall panels, support framing, fasteners, and accessories.

2. Shop drawings showing:

a. Layout of modular walls panels and locations of special pieces.

b. Installation details: Attachment methods, fasteners, joints, corners, window and door openings, intersections with adjacent materials, flashings, and other special conditions.

3. Samples:

a. Color samples for selection by Architect.

b. 10 inch minimum length by actual width wall panel sample with selected finish.

c. One each type fastener.

B. Manufacturer's installation and erection instructions.

C. Copy of warranty required by Paragraph 1.7 for review by Architect.

1.5 DELIVERY, STORAGE, AND HANDLING

A. Deliver, store, and handle metal wall panels in manner to avoid bending, gouging, scratching, denting, soiling, and contact with contaminating materials.

B. Protect pre-finished wall panels and other components with protective material such that components and finishes are not damaged during transporting, unloading, and storing at site.

C. Store materials out of weather in dry place. Protect from elements prior to installation.

D. Store bundles of cladding panels off ground. Elevate one end.

E. Do not store on site for prolonged period.

F. Handling: Avoid bending, gouging, scratching, and denting metal panels, trim, and other factory finished items.

1.6 FIELD SAMPLE

A. In accordance with Section 01 40 00 - Quality Requirements apply steel wall panels to portion of metal stud exterior wall substrate. Illustrate steel cladding including insulating sheathing, underlayment, furring, attachment method, flashings, edge and corner conditions, joints between panels and adjacent wall components, window intersections, parapet and base details, and quality of workmanship.

B. Coordinate field sample location with Architect.

C. Approximate size: 12 feet wide by full wall height.

D. Accepted sample may remain as part of Work and will be used as basis for acceptance of remaining cladding. Unacceptable samples shall be corrected or removed.

1.7 WARRANTY

A. Provide in accordance with Section 01 78 00 - Closeout Submittals:

1. Manufacturer's 20 year finish warranty for wall panels, trim, and other pre-finished painted sheet metal against cracking, peeling, chalking, and fading.

PART 2 - PRODUCTS

2.1 ACCEPTABLE MANUFACTURERS

A. Metal wall panels:

1. Berridge Manufacturing Company, San Antonio, Texas; 800-669-0009; www.berridge. com.

2. Firestone Building Products, Indianapolis, Indiana; 800-428-4511; www.firestonebpco.com.

B. Underlayment: DuPont Tyvek Weatherization Systems; Wilmington, Delaware; 800-448-9835; www.tyvekconstruction.com.

C. Requests to use equivalent products of other manufacturer's shall be submitted in accordance with Section 01 25 13 - Product Substitution Procedures. Architect reserves right to reject substitution on basis of color even though fabrication and materials are equivalent.

2.2 METAL WALL CLADDING PANELS

A. Material: 24 gage minimum, restricted flatness steel sheet metallic coated by the hot-dip process and prepainted by the coil-coating process to comply with ASTM A755/A755M.

1. Steel sheet: Structural quality, Grade 40 ksi.

2. Texture: Smooth surface.

3. Exposed finish color coating: Fluorocarbon Kynar 500/Hylar 5000 paint system combining ceramic pigmentation with polyvinylidene fluoride. Color as selected by Architect from manufacturer's full range.

4. Concealed, reverse side finish: Apply pretreatment and lite-colored polyester backer finish consisting of prime coat and wash coat with 0.5 total dry film thickness.

B. Panel type: Factory roll formed steel panels with lengthwise flanges designed to be installed by lapping and interconnecting edges of adjacent panels and mechanically attaching panels to support framing using concealed fasteners.

C. Profile: 12 inch wide panel with 1-1/2 inch high flanges and flat surface without grooves or striations; FW-12 Panel as manufactured by Berridge Manufacturing Company..

D. Fabrication: Metal wall panels shall be roll formed in manufacturer's plant. Provide wall panels in maximum possible lengths to eliminate or minimize overlapping end joints as indicated on reviewed shop drawings.

E. Provide custom cut and formed panels to accommodate penetrations, corners, and wall openings.

2.3 STEEL FURRING AND SUPPORT SYSTEM

A. Provide steel furring and support system for installation of metal wall panels as detailed on Drawings and reviewed shop drawings and specified in Section 05 12 00 - Structural Steel and Section 05 40 00 - Light Gauge Steel Framing. System shall be designed and installed to meet performance requirements specified in Paragraph 1.3.

B. Furring channels: Rolled formed, galvanized sheet steel channel with Z profile, 1-1/2 inches deep and complying with ASTM C645.

1. Channels shall be spaced horizontally as indicated on Drawings and reviewed shop drawings to support insulation sheathing and provide for attachment of metal wall panels.

2. Provide galvanized steel clips and fasteners for attaching furring channels to steel stud framing.

3. Provide horizontal steel members at top and bottom of furring.

4. Provide auxiliary members to form support around wall panel penetrations, openings, and special conditions.

C. Miscellaneous structural supports: Provide galvanized steel angles, tubing, and other sections as detailed on Drawings and reviewed shop drawings for supporting panels at window and door openings and other special conditions.

2.4 UNDERLAYMENT (Identified on Drawings as “VAPOR BARRIER”).

A. Weather and water resistant, water-vapor permeable, and tear resistant sheet underlayment fabricated from polyethylene fibers bonded by heat and pressure; StuccoWrap as manufactured by DuPont Tyvek Weatherization Systems.

1. Air penetration: Type 1 in accordance with ASTM E1677.

2. Water penetration resistance: 210 cm tested in accordance with AATCC-127.

3. Minimum water vapor transmission: 350 grams per square meter per 24 hours tested in accordance with ASTM E96.

4. Breaking resistance: 30/30 tested in accordance with ASTM D882.

5. Dry tensile strength: 20 PSI minimum in both directions.

6. Tear resistance: 7 pounds tested in accordance with ASTM D117.

7. Surface burning characteristics: Class A flame spread and smoke development tested in accordance with ASTM E84.

B. Tape: High strength, pliable, adhesive tape compatible with underlayment; DuPont Tyvek Tape as manufactured by DuPont Tyvek Weatherization Systems.

2.5 ACCESSORIES

A. Flashing and trim: Provide flashings, parapet cap, corners, bases, fillers, and other sheet metal items as indicated on Drawings and reviewed shop drawings and as required to seal against weather and to provide finished appearance. Form steel sheet flashings and trim in accordance with Section 07 62 00 - Sheet Metal Flashings and Trim.

1. Exposed-to-view flashings and trim: Provide shop applied Fluorocarbon Kynar finish as specified in Paragraph 2.3.

2. Concealed flashing and trim: Provide galvanized steel sheet trim.

B. Fasteners: Rivet fasteners of type, size, and spacing as recommended by manufacturer to accommodate performance requirements specified in Paragraph 1.3. Shop apply finish specified in Paragraph 2.3 to exposed rivets.

PART 3 - EXECUTION

3.1 PREPARATION

A. Inspect exterior steel stud walls scheduled to receive metal wall panel cladding. Verify framing is structurally sound and suitable for supporting metal wall panels. Do not proceed with cladding installation until deficiencies are addressed.

B. Install polyisocyanurate insulating sheathing on metal studs in accordance with Section 07 28 00 - Thermal and Air Barrier Wall System. Install horizontally with Z furring channels spaced as indicated on Drawings and reviewed shop drawings. Ensure reflective face is placed on exterior side.

C. Underlayment: Install in accordance with manufacturer's recommended procedures.

1. Apply one ply of underlayment over polyisocyanurate insulation.

2. Apply horizontally, shingle fashion. Tape joints and terminations at doors, windows, and other penetrations.

4. Attach with large head plastic washer head screws or 1 inch minimum crown staples.

D. Establish layout and alignment lines for installation of metal panels.

3.2 INSTALLATION

A. Coordinate with installation of:

1. Adjacent wall finish specified in Section 09 24 00 - Portland Cement Plaster. Panels.

2. Doors and windows specified in Section 08 41 14 - Aluminum Doors, Windows, and Framing.

B. Metal wall panels:

1. Layout and attach metal wall panels as indicated on Drawings and reviewed shop drawings.

2. Install metal panels over underlayment and insulation sheathing to metal Z channel support system with metal clips, anchors, and fasteners of type, size, and spacing as required to accommodate performance requirements specified in Paragraph 1.3. Place patch of butyl tape behind clips to seal fastener penetrations.

C. Flashings and trim: Provide in accordance with Section 07 62 00 - Sheet Metal Flashings and Trim and as detailed on Drawings and reviewed shop drawings.

1. Edge flashings for terminations of metal wall panels.

2. Counter flashings at top and base of wall.

3. Parapet cap.

4. Trim for door and window openings and other penetrations.

D. Ensure sheet metal edge flashings are in place.

1. Permanently fasten panels level, plumb, and accurately aligned with structure and adjacent components.

2. Do not allow steel panels or trim to come in contact with dissimilar materials. Insulate dissimilar metals to prevent electrolysis or corrosion with bituminous paint or non-absorptive isolation pad to prevent contact.

3.3 CLEANING AND PROTECTION

A. After installation, wash exposed steel surfaces with solution of water and detergent, rinse, and wipe dry.

B. Leave panels free from grease, finger marks, and dirt.

C. Remove site cuttings and debris from site.

D. Protect wall panels from damage and soiling from remaining construction operations.

END OF SECTION

SECTION 07 54 00

THERMOPLASTIC MEMBRANE ROOFING

PART 1 - GENERAL

1.1 SUMMARY

A. Section includes: Single ply, thermoplastic polyolefin (TPO) elastomeric roof membrane with heat welded seams to be fully adhered over gypsum roof cover board mechanically attached to steel roof deck.

B. Related sections:

1. Section 05 12 00 - Structural Steel and Section 05 30 00 - Metal Decking: Structural steel framing and roof deck.

2. Section 05 51 35 - Aluminum Access Ladders: Exterior ladder to provide access from one roof level to another.

3. Section 06 10 00 - Rough Carpentry: Wood roof nailers, curbs, and plywood sheathing installed on parapet walls to receive TPO base flashings.

4. Section 07 21 00 - Building Insulation: System of vinyl faced and unfaced thermal blanket insulation for Multi-Purpose Room to be installed over roof joists prior to attachment of steel deck.

5. Section 07 62 00 - Sheet Metal Flashings and Trim:

   a. Counterflashings for roof base flashings, roof hatches, and roof mounted equipment.

   b. Parapet cap, termination bars, and other sheet metal trim.

   c. Scupper and downspout assemblies for draining Multi-Purpose Room roof (Roof Area C).

   d. Metal gutter mounted in TPO membrane roof system with downspout outlets for draining roof over Lounge 109 and Vestibule 107 (Roof Area D).

6. Section 07 72 33- Roof Hatches.

1.2 REFERENCES

A. ASTM C209 - Cellulose Fiber Insulation Board.

B. ASTM C1289 - Faced Rigid Cellular Polyisocyanurate Thermal Insulation Board.

C. ASTM D471 - Test Method for Rubber Property-Effect of Liquids.

D. ASTM D751 - Standard Test Methods for Coated Fabrics.

E. ASTM D1149 - Standard Test Method for Rubber Deterioration-Surface Ozone Cracking in a Chamber.

F. ASTM D1204 - Standard Test Method for Linear Dimensional Changes of Nonrigid Thermoplastic Sheeting or Film at Elevated Temperature.

G. ASTM D1621 - Compressive Properties of Rigid Cellular Plastics.

H. ASTM D2126 - Response of Rigid Cellular Plastics to Thermal and Humid Aging.

I. ASTM D2137 - Standard Test Methods for Rubber Properties-Brittleness Point of Flexible Polymers and Coated Fabrics.

J. ASTM D5884 - Standard Test Method for Determining Tearing Strength of Internally Reinforced Geomembranes.

K. ASTM E96 - Water Vapor Transmission of Materials.

L. Factory Mutual (FM) Engineering Corporation - Roof Assembly Classifications.

M. Underwriters Laboratories (UL) - Fire Hazard Classifications.

1.3 SUBMITTALS

A. Provide in accordance with Section 01 33 00 - Submittal Procedures:

1. Product data for all roof system materials and components including characteristics, performance criteria, limitations, UL and FM listings, and wind uplift and fastening requirements.

2. Shop drawings:

a. Plans: Setting plan for tapered insulation, crickets, drainage pattern showing drains and slopes, and membrane layout with seams, direction of laps, penetration locations, and cross sections.

b. Provide fastener layout showing compliance with uplift requirements required by Paragraph 1.4.C.3.

c. Details: Provide complete set of details showing nailers, curbs, insulation attachment, flashings, penetrations, terminations, gutter, and drains. Detail conditions required to ensure assembly will be eligible for 20 year total system warranty with no dollar limit.

3. Manufacturer's certification that all products and roofing system meet UL, FM, and specified requirements.

4. Manufacturer's certification required by Paragraph 1.4.B that installer is qualified to install manufacturer's roofing system.

5. Samples:

a. 12 by 12 inch minimum size samples of rigid insulation and roof membrane including membrane lap seam.

b. One of each type fastener in lengths to be used.

6. Manufacturer's installation instructions.

7. Copy of warranty required in Paragraph 1.8 for review by Architect.

1.4 QUALITY ASSURANCE

A. Manufacturer: Company specializing in manufacture of thermoplastic sheet roofing with 15 years minimum experience.

B. Installer: Company specializing in installation of thermoplastic sheet roofing with 5 years minimum experience and currently licensed or otherwise approved by roofing manufacturer to install roofing system. Installer shall have completed 20 minimum installations of fully adhered, scrim reinforced roof membrane applications of scope and size similar to this Project.

C. Work to conform to:

1. NRCA Roofing and Waterproofing Manual.

2. Underwriters Laboratories, Inc. (UL): Class B Fire Hazard Classification.

3. Factory Mutual Engineering Corporation (FM): Complete roof assembly shall have been tested for this type application and slope and be listed in Factory Mutual Research Approval Guide as Class 1 System with wind uplift requirement for I-60 FM territory listing.

D. Single source: All components of roof system including nailers, rigid insulation, membrane, flashings, roof penetration boots, fasteners, and accessories shall be provided by a single manufacturer and shall be specifically approved by manufacturer for installation as part of roof system.

E. Manufacturer's field representative:

1. Installation shall be inspected by manufacturer's field representative during installation and at completion. Report certifying that installation was in accordance with Contract Documents and is acceptable to Manufacturer for warranty shall be submitted to Architect in accordance with Section 01 40 00 - Quality Requirements. Report shall list dates, nature of inspections, and corrective actions.

2. Manufacturer's field representative shall attend Pre-Construction Conference specified in Section 01 31 00 - Project Management and Coordination.

1.5 PRE-INSTALLATION CONFERENCE

A. Convene a pre-installation conference prior to commencing work of this Section.

B. Review:

1. Installation procedures including examination of roof deck, base flashings, terminations, and special roofing details.

2. Coordination with provision and installation of roof ladder, roof hatches, and roof mounted mechanical equipment.

3. Protection of installed items and finishes.

4. Installation of rigid insulation to provide for roof drainage.

5. Roof structure loading limitations.

6. Availability of roofing materials.

7. Preparation of substrate and penetrations through roof.

8. Weather conditions forecast, schedule, and coordination.

1.6 HANDLING

A. Store products in weather protected environment, clear of ground and moisture.

B. Mark wet, damaged, and defective materials and remove from site the same day.

C. Store temperature sensitive products at 55 to 80 degrees F prior to usage.

D. Store flammable and toxic materials according to label instructions.

1.7 ENVIRONMENTAL REQUIREMENTS

A. Do not apply roofing membrane during inclement weather or when temperature is below 40 degrees F.

B. Do not apply roofing materials to damp or frozen deck surface.

1.8 WARRANTY

A. Provide under provisions of 01 78 00 - Closeout Submittals:

1. Manufacturer's 20 year, no dollar limitation, leak-tight, hail-resistant, warranty to cover total roof system including:

a. Rigid board insulation, roof cover board, roof membrane, and other roof system components specified in this Section.

b. Sheet metal flashings and trim specified in Section 07 62 00 - Sheet Metal Flashings and Trim.

2. Warranty shall contain no limitations for improper installation, damage from environmental contaminants, or failure to drain freely.

3. Warranty to cover repairs by manufacturer to stop leaks resulting from deterioration of membrane or poor workmanship in applying roofing materials.

PART 2 - PRODUCTS

2.1 ACCEPTABLE MANUFACTURER

A. Roof membrane system:

1. Firestone Building Products Company, Carmel, Indiana; 800-428-4442; www.firestonebpco.com.

2. Carlisle SynTec, Inc., Carlisle, Pennsylvania; 717-245-7000; www.carlisle-syntec.com.

B. Requests to use equivalent products and systems of other manufacturers shall be submitted in accordance with Section 01 25 13 - Product Substitution Procedures. Proposed substitute roof systems of other manufacturers shall be of material types and installation methods required to provide warranty specified in Paragraph 1.8 and meet requirements of Paragraph 1.4 whether or not indicated in this Section as part of system specified as basis of design.

2.2 RIGID BOARD THERMAL BOARD INSULATION

A. Type: Closed cell polyisocyanurate insulation board with coated glass fiber mat facer and incorporating an HCLC-free blowing agent that does not contribute to ozone depletion; ASTM C1289, Type II, Class 1, UL Classified, FM Class I Approval.

B. Minimum compressive strength: 20 psi tested in accordance with ASTM D1621.

C. Board size:

1. Adhesive installation: 48 by 48 inches.

2. Mechanical installation: 48 by 96 inches.

D. Minimum thickness:

1. Flat boards: 1-1/2 inches as required to span flutes of metal deck.

2. Tapered boards: Variable thickness to provide required slope.

a. Roof field slope: 1/4 inch per foot minimum.

b. Cricket slope: 1/4 inch greater than roof field slope with ½ inch per foot minimum.

3. Facing: Perforated black glass reinforced mat laminated to top surface.

E. Maximum water absorption: 1 percent by volume in accordance ASTM C209.

F. Maximum water vapor transmission: 1.0 perm in accordance ASTM E96.

G. Minimum long term thermal resistance (LTTR) value: 6.0 for 1 inch thickness at 75 degrees F.

H. Dimensional stability: 2.0 percent maximum linear change in accordance with ASTM D2126.

I. Edge: Square.

2.3 ROOF COVER BOARD

A. Type: High density roof cover board with polyisocyanurate core and glass mat facing; Isogard HD as manufactured by Firestone Building Products Company.

B. Thickness: ½ inch.

C. Core: Closed cell, polyisocyanurate foam.

D. Facing: Coated glass fiber facer.

E. Minimum compressive strength: 120 PSI.

F. Density: 5 pounds per cubic foot.

G. Water absorption: 3 percent maximum.

H. Facer adhesion: 20 PSI.

I. R-value: 2.5.

2.4 MEMBRANE

A. Type: Thermoplastic polyolefin (TPO) elastomeric, heat weldable sheet membrane composed of polyester scrim fully encapsulated between two layers of ethylene propylene; UltraPly TPO as manufactured by Firestone Building Products Company.

1. Thickness: 80 mil.

2. Thickness tolerance: Plus or minus 10 percent.

3. Minimum membrane width: 6 feet.

4. Color: Tan.

5. Minimum solar reflectance index (SRI): 78.

6. Breaking strength tested in accordance with ASTM D751:

   a. Initial: 350 lbf/in.

   b. After heat aging: 366 lbf/in.

7. Elongation at break: 30 percent tested in accordance with ASTM D751.

8. Tearing strength tested in accordance with ASTM D751 and ASTM D5884:

   c. Initial: 86 lbf.

   d. After heat aging: 90 lbf.

9. Dimensional stability: Plus or minus 0.1 percent tested in accordance with ASTM D1204.

10. Water absorption: Plus or minus 1 percent tested in accordance with ASTM D471.

11. Ozone resistance: No effect when tested in accordance with ASTM D1149 at 100 degrees F at 7 hours.

12. Brittleness point: Minus 60 degrees F tested in accordance with ASTM D2137.

B. Seaming materials: As recommended by membrane manufacturer.

2.5 FLASHINGS

A. Base flashings: Same material as roof membrane specified in Paragraph 2.4.

B. Flexible flashing: 60 mil non-reinforced thermoplastic polyolefin membrane; UltraPly TPO Unsupported Flashing as manufactured by Firestone Building Products Company.

C. Penetration boots: Pipe and conduit boots: Boot type flashings for round penetrations factory fabricated from thermoplastic polyolefin with stainless steel worm-gear clamps; UltraPly TPO Small and Large Pipe Flashing as manufactured by Firestone Building Products Company.

D. Corner flashings: Pre-molded inside and outside corners factory fabricated from thermoplastic polyolefin; UltraPly TPO Inside and Outside Corners as manufactured by Firestone Building Products Company.

E. Counterflashings, parapet caps, fascias, and termination bars: Sheet metal fabrications as specified in Section 07 62 00 - Sheet Metal Flashings and Trim.

2.6 ACCESSORIES

A. Wood nailers and curbs: Preservative treated wood members as specified in Section 06 10 00 - Rough Carpentry.

B. Fasteners: Appropriate for purpose intended and approved by Factory Mutual and roofing system manufacturer; length required for thickness of material.

1. Provide fasteners penetrating through insulation with anti-backout devices.

2. Provide fasteners with barbed ends for anchorage to lightweight concrete decks.

3. Use fasteners at wood nailers, curbs, and blocking that will not affect preservative treatment.

C. Bonding adhesive: Appropriate for adhering TPO membrane, solvent type with nitrite rubber base; XR Bonding Adhesive as manufactured by Firestone Building Products Company. Do not use adhesives for membrane seams.

D. Primer: Appropriate for preparing contaminated membrane for hot-air welding and approved and provided by roofing system manufacturer.

E. Sealants: Appropriate for purpose intended and approved and provided by roofing system manufacturer.

PART 3 - EXECUTION

3.1 GENERAL

A. Install single ply, thermoplastic polyolefin (TPO) adhered to ½ inch thick glass mat faced roof cover board mechanically attached to standard steel roof deck in accordance with manufacturer's instructions and reviewed shop drawings.

B. Do not expose materials vulnerable to water or sun damage in quantities greater than can be weatherproofed during the same day.

3.2 PREPARATION

A. Verify that these roof systems of open web joists and ribbed steel deck are installed to provide roof slope of 1/4 inch per foot:

1. Area A : Kitchen 105, Vestibule 104, Mechanical 100, and Electrical 101.

2. Area B: Classrooms 117/116 and Toilets 114/113.

3. Area C: Multi-Purpose Room.

B. Verify roof system for Area D - Lounge 109 and Vestibule 107 has slope of 2 inches per foot.

C. Prior to start roofing, verify substrates are clean; smooth; dry; free of snow, ice, depressions; and other defects; and suitable for roof installation. Report deficiencies and do not proceed until deficiencies are addressed.

D. At roof penetrations, extend piping, conduit, and lines as required such that lines extend 5 inches minimum above new roof membrane. Allow for provision of pipe boots at these penetrations.

E. Remove all debris from areas to be roofed and sweep clean.

F. Protect building surfaces against damage from roofing work.

3.3 WOOD NAILERS AND CURBS

A. Verify chemically treated nailers and curbs are compatible with roofing materials.

B. Install wood nailers at roof edges, metal flashings, as blocking for installation of roof hatch, equipment, and elsewhere as shown on Drawings and reviewed shop drawings and as required by system manufacturer.

1. Nailer height shall match height of insulation.

2. Provide 1/8 inch minimum gap between butting ends and direction changes.

3. Fasten to structural roof and wall framing with fastener heads countersunk with the surface of the nailer. Space fasteners at 18 inches minimum. Ensure that nailers can resist 200 pounds force in any direction.

C. Provide roof curbs for mechanical equipment, vents, and other roof mounted components in accordance with Section 06 10 00 - Rough Carpentry. When extended, top of curbs shall be 8 inches minimum above new roof membrane.

3.4 INSTALLATION OF RIGID BOARD CRICKETS

A. Coordinate with installation of steel roof framing and steel roof deck specified in Section 05 12 00 - Structural Steel and Section 05 30 00 - Metal Decking. Verify:

1. Roof framing for Roof Areas A, B, and C has been constructed to form a roof slope of 1/4 inch per foot.

2. Roof Area D has been constructed with slope of 2 inches per foot.

B. As indicated and detailed on Drawings and reviewed shop drawings., mechanically fasten multiple layers of flat and tapered polyisocyanurate insulation boards to form drainage and crickets:

1. Roof field slope: 1/4 inch per foot minimum.

2. Cricket slope: 1/4 inch greater than roof field slope with ½ inch per foot minimum.

3. For multiple layers, stagger joints between layers 6 inches minimum.

4. Install boards with edges in moderate contact without forcing.

5. Cut boards and fit neatly to perimeter blocking, penetrations, projections, curbs, and nailers with 1/4 inch maximum gap. Do not allow roof membrane to be unsupported over space greater than 1/4 inch.

6. Mechanically fasten first layer of 1-1/2 inch thick rigid polyisocyanurate thermal insulation. Space fasteners as recommended by roofing system manufacturer and to meet Factory Mutual requirements. Place fasteners 6 inches minimum from board edges.

7. Use uniform length of fasteners. Ensure fasteners penetrate deck 3/4 inch minimum and 1 inch maximum and are placed only into top of roof deck flutes. Fasteners that penetrate metal deck more than 1 inch shall be cut to form a 1-inch penetration.

8. Adhesive apply multiple layers of flat and tapered rigid board insulation to first layer of rigid insulation.

9. Top layer of rigid board insulation shall be ½ inch thick roof cover board. Apply cover board with adhesive.

C. For Roof Area D without drainage crickets, mechanically attach ½ inch thick, roof cover board to the steel roof deck.

D. Ensure that all roof areas to receive TPO roof membrane are covered by polyisocyanurate glass mat faced cover board..

E. Sheet metal roof gutter: Mount gutter specified in Section 07 62 00 - Sheet Metal Flashings and Trim on roof over Lounge 109 and Vestibule 107 (Roof Area D).

1. Securely anchor gutter to roof structure over roof cover board as detailed on reviewed shop drawings.

2. Attach drainage outlets to both ends of gutter. Ensure provision is made to drain water onto adjacent lower roofs.

3. Line interior of gutter with roof membrane in accordance with this Section Paragraph 3.5.

3.5 MEMBRANE PLACEMENT

A. Unroll roof membrane over rigid insulation. Pull, removing all wrinkles but do not stretch. Allow to relax 30 minutes.

B. Place membrane sheets so that roof deck drains across shingled laps.

C. Install half sheets at all exterior roof perimeters.

D. Lap adjoining sheets and heat seal by hot air welding.

E. Seal all cut edges with scrim exposed with manufacturer's cut edge sealant.

F. Attach membrane with bonding adhesive. Apply adhesive to rigid board substrate at rate of 70 to 85 square feet per gallon. Apply evenly avoiding puddles, globs, and uncoated areas.

1. Allow adhesive to flash-off.

2. Roll membrane in adhesive, avoiding bridging and wrinkling.

3. Use 75 to 150 pound roller with smooth surface to roll freshly bonded membrane with 2 minimum back and forth motions.

4. Hot weld seams and lap splices in accordance with manufacturer’s instructions.

3.6 FLASHINGS

A. Parapet wall preparation: Install ½ inch thick plywood on metal stud parapet walls to receive membrane flashings.

1. Install horizontally and perpendicular to studs with board edges over firm blocking.

2. Ensure board joints are flush and smooth and heads of fasteners are flush with board surface.

B. Base flashing general requirements:

1. Install reinforced TPO roof membrane as base flashings except where special corners, joints, wrappings around odd shaped penetrations, and other conditions require use of pre-molded corners and boots.

2. Base flashings shall extend 8 inches minimum and 24 inches maximum above level of roof and onto roof membrane to cover fasteners and form splice.

3. Base flashings extending more than 24 inches on parapet wall shall be installed in multiple overlapping lengths with intermediate attachments.

C. Base flashing installation:

1. Terminate roof membrane at base of parapet wall and mechanically attach.

2. Cut base flashing into 6 to 8 feet sections prior to installation.

3. Apply bonding adhesive to flashing and parapet wall substrate.

4. Roll flashing onto vertical parapet wall without wrinkles. Compress flashing to substrate with broom to ensure proper contact.

5. Splice flashing membrane onto horizontal roof membrane by hot air welding.

D. Base flashing termination:

1. Depending on Project conditions, terminate flashing with surface mounted two piece reglet, stucco reglet, sheet metal counter flashing, or termination bar as specified in Section 07 62 00 - Sheet Metal Flashings and Trim as detailed on Drawings and reviewed shop drawings.

2. Where indicated on Drawings extend flashing to top of parapet wall and secure to wood blocking beneath sheet metal parapet cap.

E. Install pre-molded corners and penetration boots in accordance with manufacturer's instructions and reviewed shop drawings.

F. Install and flash mechanical equipment, roof hatches, roof scuppers, and sheet metal counter flashings as specified in Section 07 62 00 - Sheet Metal Flashings and Trim in accordance with manufacturer's instructions and reviewed shop drawings.

3.7 FIELD QUALITY CONTROL

A. After membrane and flashings are installed, manufacturer's field representative shall inspect installation.

B. Correct identified deficiencies as directed by manufacturer's field representative.

C. Verify that all roof drains and drain pipes are free of debris, bonding adhesive, sealants, and other obstructions that would impede drainage of water.

3.8 CLEANUP AND PROTECTION

A. Repair or replace defaced or disfigured finishes resulting from roofing operation.

B. Remove debris, excess materials, and equipment from roof and site.

C. Protect finished roof membrane from subsequent construction activities.

END OF SECTION

SECTION 07 62 00

SHEET METAL FLASHINGS AND TRIM

PART 1 - GENERAL

1.1. SUMMARY

A. Section includes:

1. Parapet cap (Coping).
2. Counterflashings for roof base flashings and roof mounted mechanical equipment.
3. Scuppers and downspout assemblies for draining Multi-Purpose Room roof (Roof Area C)
4. Metal gutter mounted in TPO membrane roof system with downspout outlets for draining roof over Lounge 109 and Vestibule 107 (Roof Area D).
5. Sheet metal trim.
6. Manufactured reglets.
7. Trim for metal wall panels.
8. Other sheet metal not specifically described but required to prevent penetration of water through exterior building shell.

B. Related sections:

1. Section 06 10 00 - Rough Carpentry: Wood blocking, nailers, and roof curbs.
2. Section 07 54 00 - Thermoplastic Membrane Roofing: Installation of gutter and other sheet metal specified in this Section and warranty for roofing assembly including sheet metal and flashings.
3. Division 22 - Plumbing: Interior roof drains and downpipes.

1.2 REFERENCES

A. ASTM A525 - Steel Sheet, Zinc Coated, (Galvanized) by the Hot-Dip Process.

B. ASTM A792 - Sheet Steel, Aluminum-Zinc Alloy-Coated (Galvannealed) by the Hot Dip Process.

C. ASTM B32 - Solder Metal.

D. ASTM B209 - Aluminum and Aluminum-Alloy Sheet and Plate.

E. ASTM D226 - Asphalt-Saturated Organic Felt Used in Roofing and Waterproofing.

F. ASTM D4586 - Asphalt Roof Cement, Asbestos Free.

G. FS O-F-506- Flux, Soldering, Paste and Liquid.

H. International Code Council (ICC): ICC IBC - International Building Code.

I. National Roofing Contractors Association (NRCA): NRCA Roofing Manual.

J. Sheet Membrane and Component Supplier to the Commercial Roof Industry (SPRI): ES-1 - Wind Design Standard for Edge Systems used with Low Slope Roofing Systems.

K. Sheet Metal and Air Conditioning Contractors Association International (SMACNA): SMACNA Architectural Sheet Metal Manual.

1.3 QUALITY ASSURANCE

A. Perform work in accordance with applicable NRCA and SMACNA details and requirements.

B. Edge metal shall be manufactured, tested, and installed to comply with SPRI ES-1 as required by ICC IBC Chapter 15, Section 1504.5.

1.4 SUBMITTALS

A. Provide in accordance with Section 01 33 00 - Submittal Procedures:

1. Product data.

2. Shop drawings for shop fabricated items showing profile, dimensions, material gages, and installation and fastening methods.

3. Samples of factory applied finishes.

4. Copy of warranty required by Paragraph 1.6.B for review by Architect.

1.5 HANDLING

A. Stack preformed material to prevent twisting, bending, or abrasion. Provide ventilation.

B. Prevent contact with materials during storage which may cause discoloration, staining, or damage.

1.6 WARRANTY

A. Sheet metal roof flashings shall be covered as part of roof membrane warranties specified in 07 54 00 - Thermoplastic Membrane Roofing.

B. Provide under provisions of Section 01 78 00 - Closeout Submittals: 20 year warranty to cover prefinished sheet metal color coating against peeling, fading, and other deterioration.

PART 2 - PRODUCTS

2.1 MATERIALS

A. Galvanized sheet steel: ASTM A446, Grade A, G90 zinc coating, 24 minimum gage or as otherwise indicated.

B. Galvalume aluminum-zinc alloy coated sheet steel: ASTM A792, AZ 55 coating, 24 minimum gage or as otherwise indicated.

C. Aluminum sheet: ASTM B209, 0.05 inch minimum thickness or as otherwise shown.

D. Fasteners: Corrosion resistant, galvanized steel with soft neoprene washers at exposed fasteners.

E. Underlayment: ASTM D266, No. 15 asphalt saturated roofing felt.

F. Protective backing paint: Aluminum or heavy-bodied bituminous.

G. Slip sheet: Rosin sized building paper.

H. Plastic cement: ASTM D4586.

I. Solder: ASTM B32.

J. Flux: FS O-F-506.

2.2 FABRICATION

A. At Contractor's option, sheet metal trim and flashings may be fabricated from either galvanized sheet steel or galvalume, 24 gage minimum unless otherwise indicated.

B. Fabricate items to profiles and dimensions indicated on Drawings.

C. Linear components: Form in longest possible lengths with 8 foot as minimum.

D. Intersections: Cope to fit accurately and solder.

E. Corners: Fabricate as one piece with 18 inches minimum legs. Seam and solder.

F. Edges: Turn back all exposed edges to form ½ inch hem.

G. Lock seams: Flat, ½ inch minimum width, soldered, and lapped in direction of flow.

H. Unless shown otherwise on Drawings, fabricate vertical faces with bottom edge formed outward 1/4 inch and hemmed to form drip.

I. Soldering: Clean and tin materials. Completely fill seams with solder. Soldering on exposed finished surfaces shall be neat, full flowing, and smooth. After soldering, remove flux and wipe and wash joints clean.

J. Counterflashings: Form to extend 4 inches minimum over roofing.

K. Multi-Purpose Room roof drains: Fabricate from 22 gage minimum prefinished galvanized steel sheet drainage assemblies consisting of:

1. Scupper: Through-wall type with rectangular profile with flanges for flashing into roof membrane and leader box connecting to downspout.

2. Downspout: Vertical, rectangular downspout with smooth surface to carry rainwater from scupper to finish grade.

   a. Size: As required to convey projected rainwater quantity.

   b. Fabricate downspouts by roll forming in maximum lengths to eliminate field joints.

c. Straps: Provide sheet metal straps with fasteners to attach downspouts to exterior wall fabricated from same material and finish as downspouts and scupper.

d. Downspout sieve: Dome-shaped wire piece inserted into gutter outlet to prevent leaves and other debris entering downspout.

3. Fabricate drainage assemblies as detailed and dimensioned on reviewed shop drawings.

L. Roof mounted gutter: Fabricate from 22 gage steel sheet with rectangular profile as detailed and dimensioned on Drawings and reviewed shop drawings.

1. Provide gutter in single length with soldered joints to eliminate field joints. Equip gutter with metal strap connectors with locking device and neoprene gasket for joining and sealing two lengths of gutter.

2. Provide hooked shaped straps for anchoring gutter to roof structure.

3. Gutter outlets: Rectangular shaped outlets to convey water from both ends of gutter to adjacent lower roof areas. Install outlets by soldering.

M. Termination bars: 0.087 inch thick aluminum flat bar with sealant channels and pre-punched with slotted attachment holes at 12 inches.

2.3. PARAPET CAP

A. Form from 24 gage steel sheet as channel profile with dimensions shown on Drawings. Vary width to accommodate different parapet wall thicknesses. Provide drip edges and pitch top 5 degrees minimum to roof surface.

B. Cleats: Fabricate from 26 gage sheet steel, shaped to interlock with front edge of parapet cap and run continuous inside cap.

C. Splice plates: Fabricate from 26 gage sheet steel, 12 inches long, channel profile to fit inside parapet cap and interlock.

D. Corners: Shop fabricate as one piece with 18 inch minimum legs. Seam and solder.

2.4. SHEET METAL TRIM

A. Provide sheet metal trim pieces for the following systems and as required to provide weathertight, neat joint covers as indicated on Drawings and reviewed shop drawings.

1. Metal roof specified in Section 07 42 13 - Metal Wall Panels.

2. Door and window framing specified in Section 08 11 00 - Steel Doors and Frames and Section 08 41 14 - Aluminum Doors, Windows, and Framing.

B. Edge trim: Fabricate drip edge trim pieces from 24 gage minimum steel sheet to profiles and dimensions detailed on Drawings and reviewed shop drawings.

1. Provide 4 inch minimum flanges extending beneath metal roof panels and cover with waterproof membrane.

2. Fabricate vertical faces with bottom edge formed outward ½ inch and hemmed to form drip.

2.5 MANUFACTURED REGLETS

A. Acceptable manufacturers:

1. Fry Reglet Corporation, Alhambra, California; 800-237-9773; www.fryreglet.com.

2. Requests to use equivalent products of other manufacturers shall be submitted in accordance with Section 01 25 13 - Product Substitution Procedures.

B. Material: 26 gage minimum galvanized steel sheet.

C. Type: Two piece assemblies to provide protection for roof membrane terminations.

1. Stucco reglet: Designed to be surface mounted to stucco substrate prior to lathing and to receive snap lock flashing; Type ST as manufactured by Fry Reglet Corporation.

a. Shape: 1 by 1 inch angle with hemmed bottom to receive spring-lock flashing.

b. Flange at top to receive field applied sealant.

2. Spring-lock flashing: Designed to snap into surface mounted reglet; Springlok Flashing as manufactured by Fry Reglet Corporation.

a. Shape: 3-1/8 inches long with attachment hook at top and profile to provide spring lock force and form air break to prevent capillary water migration.

b. Flashing designed to securely attach to reglet without clips, screws or other type fastener and to press against roof membrane termination.

2.3 FINISHING

A. Provide these items with fluorocarbon paint coating, Kynar 500 finish. Color as indicated designated by Architect.

1. Scupper and downspout assemblies for Multi-Purpose Room roof drainage.

2. Parapet cap.

3. Window, door, and other exposed-to view sheet metal components indicated on Drawings.

A. Other sheet metal components shall have bare galvanized or galvalume finish.

B. Backpaint concealed metal surfaces with protective backing paint.

PART 3 - EXECUTION

3.1 PREPARATION

A. Verify roof openings, curbs, blocking, and nailing strips are in place.

B. Verify membrane termination and base flashings are in place, sealed, and secure.

C. Coat dissimilar materials in contact with sheet metal and flashings:

1. Concrete and masonry: One coat bituminous paint.

2. Wood: 2 coats aluminum paint.

3.2 INSTALLATION

A. Install sheet metal flashings and trim as part of:

1. Section 07 42 13 - Metal Wall Panels.

2. Section 07 54 00 - Thermoplastic Membrane Roofing.

3. Section 08 11 00 - Steel Doors and Frames.

4. Section 08 41 14 - Aluminum Doors, Windows, and Framing.

5. Section 09 24 00 - Portland Cement Plaster.

B. Erect sheet metal plumb and level without bulges or waves.

C. Secure flashings in place using concealed fasteners unless shown otherwise. Lap and seal all joints. Fasteners shall be aligned and equally spaced. Exposed fasteners shall be covered with sealant.

D. Fit flashings tight in place. Make corners square, and surfaces true and straight in planes.

E. Parapet cap:

1. Attach continuous anchor cleat to wood blocking bolted to parapet top. Anchor cleat at 3 feet maximum. Provide tapered perlite board under parapet cap for rigidity.

2. Install splice plates at parapet cap joints. Attach splice plate by interlocking to cleat.

3. Locate parapet cap butt joints over splice plates. Allow 1/4 inch between abutting sections for expansion. Apply two beads of sealant to splice plate prior to installing lengths of parapet cap.

4. Interlock parapet cap to cleats and splice plates.

3.3 REGLET INSTALLATION

A. Install reglets as detailed on Drawings and in accordance with manufacturer's recommendations and reviewed shop drawings.

B. Surface mounted reglets: Attach to new wall substrates where indicated on Drawings. Prior to installation, apply continuous bead of sealant in indentation on back side of reglet. After attachment, apply continuous bead of sealant in top flange of reglet.

C. Stucco reglets: Surface mount to stucco substrate prior to lathing.

D. After application of roof membranes and flexible base flashings, hook spring lock flashings into reglets and over base flashings.

END OF SECTION

SECTION 07 72 33

ROOF HATCHES

PART 1 - GENERAL

1.1 SUMMARY

A. Section includes:

1. Manufactured roof hatches with integral support curbs, hardware, and counterflashings.

2. Manufactured safety post extension to be attached to interior roof access ladder.

B. Related sections:

1. Section 05 51 35 - Aluminum Access Ladders: Roof access ladder.

2. Section 06 10 00 - Rough Carpentry: Wood curbs, blocking, and nailers.

3. Section 07 54 00 - Thermoplastic Membrane Roofing: Base flashing at hatch curb.

1.2 SUBMITTALS

A. Provide in accordance with Section 01 33 00 - Submittal Procedures:

1. Product data and shop drawings showing configurations, dimensions, fastening methods, and installation details.

2. Manufacturer's installation instructions.

PART 2 - PRODUCTS

2.1 ACCEPTABLE MANUFACTURERS

A. Bilco Company, New Haven Connecticut; 203-934-6363.

B. Milcor Incorporated, Lima, Ohio; 419-228-1411.

C. Requests to use equivalent products of other manufacturers shall be submitted in accordance with Section 01 25 13 - Product Substitution Procedures.

2.2 ROOF HATCH

A. Type: Aluminum, single leaf, integral curb, insulated roof hatch: Model S-50 as manufactured by Bilco Company or Model RDS-1 as manufactured by Milcor Incorporated.

B. Nominal size: 30 by 36 inches.

C. Curb and frame: 11 gage mil finish aluminum with 1 inch rigid insulation. Provide with integral cap flashing to receive roof flashing and extended flanges for mounting to roof.

D. Cover: 11 gage mill finish aluminum exterior cover and 1 inch fiberglass insulation retained by 18 gage aluminum inner liner. Provide with closed cell rubber weather seal.

E. Hinges: Heavy duty pintle type.

F. Hardware: Manually operated type with compression spring operators in telescopic tubes, positive snap latch, turn handles inside and out, and padlock hasp inside. Automatic hold-open arm with vinyl covered grip handle for easy release. Provide hardware with cadmium plated finish.

G. Fabrication:

1. Fabricate free of visual distortion and defects. Weld corners and joints.

2. Design to support 40 PSF roof load.

3. Provide weathertight assembly.

2.3 SAFETY POST EXTENSION

A. Type: Safety post extension for fixed ladders constructed of tubular steel sections with adjustable mounting brackets for attachment to ladder rungs; Model LU-1 as manufactured by Bilco Company.

B. Operation: Upward and downward movement controlled by spring balancing mechanism activated by release rod. Automatically locks when fully extended.

C. Operating instructions: Permanently mounted on safety post to be plainly visible to ladder users.

D. Finish: Black enamel.

PART 3 - EXECUTION

3.1 ROOF HATCH INSTALLATION

A. Install roof hatch in accordance with manufacturer's instructions. Coordinate with installation of roofing system and flashings.

B. Apply bituminous paint on aluminum surfaces in contact with dissimilar metals.

C. Anchor hatch securely to roof structure to withstand lateral forces and inward and outward pressures.

D. Test operable components and adjust for proper operation.

3.2 SAFETY POST EXTENSION INSTALLATION

A. Coordinate provision of safety post extensions with roof hatch and access ladder.

B. Install safety post extensions on all new roof access ladders. Install in accordance with manufacturer's instructions.

C. Attach to top two rungs of ladder and centered between side rails. Adjust post to extend 42 inches above top rung when roof hatch is open and post is fully extended.

END OF SECTION

SECTION 07 92 00

JOINT SEALANTS

PART 1 - GENERAL

1.1 SUMMARY

A. Section includes: Installation of sealants in interior and exterior joints, around door frames and other components, around items penetrating structure, and wherever indicated or required to seal joints and prevent flow of air or water. Work includes:

1. Preparing sealant substrate surfaces.

2. Sealants and backing.

B. Related sections:

1. Section 03 35 30 - Concrete Floor Finishes: Colored joint filler sealant installed in saw cut concrete floor control joints.

2. Section 09 91 00 - Painting: Painting exposed-to-view acrylic latex sealant joints.

1.2 REFERENCES

A. ASTM C834 - Latex Sealing Compounds.

B. ASTM D1056 - Flexible Cellular Materials - Sponge or Expanded Rubber.

C. FS TT-S-001543 - Sealing Compound: Silicone Rubber Base for Caulking, Sealing, and Glazing in Buildings and Other Structures.

D. FS TT-S-001657 - Sealing Compound: Single Component, Butyl Rubber Based, Solvent Release Type.

E. FS TT-S-00227 - Sealing Compound: Elastomeric Type, Multi-Component For Caulking, Sealing, and Glazing in Buildings and Other Structures.

1.3 QUALITY ASSURANCE

A. Provision and installation of sealants shall comply with requirements of Albuquerque Energy Conservation Code (AECC) 2009.

1.4 SUBMITTALS

A. Provide in accordance with Section 01 33 00 - Submittal Procedures:

1. List of proposed products and data indicating sealant chemical characteristics, performance criteria, limitations, and colors available.

2. Samples of available colors to be selected by Architect so that appearance is compatible with surrounding surfaces.

3. Manufacturer's installation instructions.

1.5 ENVIRONMENTAL REQUIREMENTS

A. Do not install solvent curing sealants in enclosed building spaces without proper ventilation.

B. Maintain temperature and humidity recommended by manufacturer during and after installation.

PART 2 - PRODUCTS

2.1 SEALANTS

A. Type A - Silicone sealant, FS TT-S-001543, Class A:

1. Single component, low modulus, ultraviolet resistant.
2. Movement: 100 percent expansion, 50 percent contraction.
3. Service temperature range: -65 to 300 degrees F.
4. Joint size limitation:
   a. Minimum: 1/8 by 1/8 inch.
   b. Maximum: 1 inch wide by ½ inch deep.
5. Life expectancy: 30 years.

B. Type B - Butyl, FS TT-S-001657, Type I:

1. Single component.
2. Movement: 5 percent.
3. Joint size limitation:
   a. Minimum: 1/4 by 1/4 inch.
   b. Maximum: ½ inch wide by 3/8 inch deep.
4. Life expectancy: 10 years.

C. Type C - Acrylic latex, ASTM C 834:

1. Single component, fast setting, paintable:
2. Movement: 12 percent.
3. Joint size limitation:
   a. Minimum: 1/4 by 1/4 inch.
   b. Maximum: 3/4 inch wide by ½ inch deep.
4. Life expectancy: 10 years.

D. Type D - Acoustical sealant, ASTM C 919:

1. Non-hardening.

2. Joint limitation: ½ inch maximum.

3. Life expectancy: 20 years.

E. Type E - Polyurethane, FS TT-S-00227, Type I, Class A:

4. Multi-component, self leveling.

5. Movement: 25 percent.

6. Joint size limitation:

a. Minimum: 3/8 by 3/8 inch.

b. Maximum: No width limitation, ½ inch deep.

7. Life expectancy: 10 years.

2.2 ACCESSORIES

A. Primer: Non-staining type, recommended by sealant manufacturer to suit application.

B. Joint cleaner: Non-corrosive, non-staining type, recommended by sealant manufacturer; compatible with joint forming materials.

C. Joint backing: ASTM D1056 round polyethylene foam rod oversized 30 percent larger than joint width.

D. Bond breaker: Pressure sensitive tape recommended by sealant manufacturer to suit application.

PART 3 - EXECUTION

3.1 EXAMINATION

A. Verify that joint openings are ready to receive sealants.

B. Beginning installation implies installer accepts existing surfaces.

3.2 PREPARATION

A. Coordinate with work of other trades specified in other Sections to ensure that joints are properly sealed in a timely manner to provide a weathertight building envelope.

B. Clean and prime joints in accordance with manufacturer's instructions.

C. Remove loose materials and foreign matter which might impair adhesion of sealant.

D. Protect surrounding surfaces from damage or disfiguration.

3.3 INSTALLATION

A. Install products in accordance with manufacturer's instructions.

B. Sealants:

1. Completely seal joints indicated on Drawings and as required to render weathertightness, close openings, and allow movement of materials. Seal around all conduit penetrations of structure.

2. Install joint backing to achieve a sealant depth no greater than 1/3 joint width. Install backing with blunt instrument; do not twist rod.

3. Apply sealant within recommended application temperature ranges. Consult manufacturer when sealant cannot be applied within these ranges.

4. Apply sealant with minimum exposure to air using pressure gun with nozzle cut to fit joint width.

5. Install sealant free of air pockets, foreign embedded material, ridges, and sags.

6. Tool joints concave unless otherwise noted.

7. Do not lap or feather onto adjacent surfaces.

3.4 CLEANING AND REPAIRING

A. Clean adjacent soiled surfaces.

B. Repair or replace defaced and disfigured finishes caused by work of this Section.

C. Protect sealants until cured.

D. Visually inspect joints after 30 days. Replace joints showing bond failure, excessive shrinkage, cracking, or improper curing.

E. Exposed-to-view acrylic latex sealant joints shall be field painted to match adjacent wall, frame, and other surface in accordance with Section 09 91 00 - Painting.

3.5 SCHEDULE

A. For the following locations provide type of sealants listed in Paragraph 2.1:

1. Flashing and sheet metal: Silicone Type A.

2. Aluminum door and window frames: Silicone Type A.

3. Hollow steel frames: Silicone Type A or Acrylic Type C.

4. Under thresholds: Silicone Type A.

5. Glazing: Butyl Type B.

6. Gypsum board partitions and other general interior uses: Acrylic latex Type C.

7. Plastic laminate countertops, and other interior locations subject to water exposure: Silicone Type A.

8. Concrete paving: Polyurethane type E.

9. Around perimeter of sound barrier partitions and items penetrating them and other acoustical applications: Acoustical Type D.

END OF SECTION

SECTION 08 11 00

STEEL DOORS AND FRAMES

PART 1 - GENERAL

1.1 SUMMARY

A. Section includes: Non-rated , interior and exterior hollow steel doors and hollow steel door frames. Includes door vision lites and grouting of hollow metal frames.

B. Related sections:

1. Section 08 14 00 - Wood Doors: Wood doors installed in hollow steel frames.

2. Section 08 71 00 - Door Hardware: Hardware for hollow steel doors.

3. Section 08 80 00 - Glazing: Glass for door vision lites and interior hollow steel sidelights and transoms.

4. Section 09 91 00 - Painting: Field painting of doors and frames.

C. See Door Schedule in Drawings for sizes of hollow steel doors and frames.

1.2 REFERENCES

A. American National Standards Institute (ANSI):

1. ANSI A250.6 - Hardware on Standard Steel Doors (Reinforcement Application).

2. ANSI A250.8 - Recommended Specifications for Standard Steel Doors and Frames.

3. ANSI A250.11 - Recommended Erection Instructions for Steel Frames.

B. American Society of Testing and Materials (ASTM):

1. ASTM A366 - Steel, Carbon, Cold Rolled Sheet, Commercial Quality.

2. ASTM A653 - Steel Sheet, Carbon, Zinc-Coated (Galvanized) or Zinc-Iron Alloy-Coated (Galvannealed) by Hot-Dip Process.

3. ASTM A780 - Practice for Repair of Damaged Hot-Dip Galvanized Coatings.

4. ASTM C236 - Test Method for Steady-State Thermal Performance of Building Assemblies by Means of a Guarded Hot Box.

5. ASTM C578 - Rigid, Cellular Polystyrene Thermal Insulation.

6. ASTM E84 - Test Method for Surface Burning Characteristics of Building Materials.

C. Consumer Product Safety Commission (CPSC):

1. CPSC 16 CFR 1201 - Safety Standard for Architectural Glazing Materials.

D. Door Hardware Institute (DHI): Recommended Locations for Architectural Hardware for Standard Steel Doors and Frames.

E. National Fenestration Rating Council (NFRC):

1. NFRC 400 - Procedure for Determining Fenestration Product Air Leakage.

F. Steel Door Institute (SDI) Publications:

1. SDI 117 - Manufacturing Tolerances Standard Steel Doors and Frames.

G. Steel Structures Painting Council (SSPC):

1. SSPC Paint 20 - Zinc-rich Primers (Type I, Inorganic, and Type II, Organic).

2. SSPC SP 5 - White Metal Blast Cleaning.

3. SSPC SP 8 - Pickling.

1.3 SUBMITTALS

A. Submit in accordance with Section 01 33 00 - Submittal Procedures:

1. Product data.

2. Shop drawings indicating door and frame elevations, dimensions, frame configurations and profiles, cutouts for hardware, reinforcement, anchors, and details for fabrication, glazing, and installation.

3. Door and frame schedule: Use same reference numbers as indicated in Contract Documents.

4. Certificates documenting:

a. R-value: Thermal units have been successfully tested in accordance with Paragraph 1.4.C.

b. Air leakage: Exterior doors and frames have been successfully tested in accordance with Paragraph 1.4.D.

1.4 QUALITY ASSURANCE

A. Thermal resistance rating: Provide certificate that flush panel exterior doors have been tested to provide minimum R-value of 3.8 when tested in accordance with ASTM C236.

B. Air-leakage: Provide certificate that exterior doors and frames have been tested in accordance with NFRC 400 as door assembly with weatherstripping and gaskets specified in Section 08 71 00 - Door Hardware to provide maximum air leakage of 0.4 cubic feet per minute per square foot.

C. Door glazing: Comply with CPSC 16 CFR 1201 and other applicable safety requirements. Each piece of safety glazing shall be permanently labeled with appropriate marking.

1.5 PRODUCT HANDLING

A. Frame spreaders: Before shipment, install temporary spreaders at bottom of frames; do not remove until frames are in place.

B. Protection: During shipping and storage protect doors with cardboard or other resilient packaging. Immediately remove wrappings that become wet.

C. Storage: Store under cover in dry, vented, humidity free, protected space. Place units on blocking in upright position with 1/4 inch air circulation spaces between units.

PART 2 - PRODUCTS

2.1 ACCEPTABLE MANUFACTURERS

A. Steel doors and frames:

1. Amweld Building Products, Inc., Garrettsville, Ohio; www.amweld.com.

2. Ceco Door Products, Milan, Tennessee; 731-686-8345; www.cecodoor.com.

3. Curries Company, Mason City, Iowa; 641-423-1334.

4. Republic Builders Products, McKenzie, Tennessee; 731-352-3383; www.republicdoor.com.

5. Steelcraft, Cincinnati, Ohio; 513-745-6400; www.steelcraft.com.

B. Requests to use equivalent products of other manufacturers shall be submitted in accordance with Section 01 25 13 - Product Substitution Procedures.

2.2 MATERIALS

A. Cold-rolled steel sheet: Commercial quality, stretcher level for flatness complying with ASTM A366.

B. Galvanized steel sheet: Comply with ASTM A924 and coated by hot dip process in accordance with ASTM A653 to A60 or G60 coating.

C. Door core:

1. Honeycomb: Resin impregnated cardboard honeycomb with 1-inch maximum cells.

2. Polystyrene: Rigid, extruded, fire retardant, closed cell board complying with ASTM C578.

D. Galvanizing repair paint: Comply with SSPC - Paint 20.

E. Primers:

1. Galvanized steel: Zinc-dust, zinc-oxide, air-dried primer.

2. Cold rolled steel: Rust-inhibiting primer complying with and compatible for field applied finish paint coats. Factory applied and either air-dried or thermoset.

F. Glazing: As specified in Section 08 80 00 - Glazing.

G. Foamed-in-place insulation: Two component foamed-in-place insulation.

1. Thermal conductivity: Minimum R of 4.5 at 75 degrees F in accordance with ASTM C177.

2. Maximum flame spread: 15 in accordance with ASTM E84.

3. Maximum smoke development: 100 in accordance with ASTM E84.

4. Maximum shrinkage: 2.0 percent.

5. Non-toxic.

2.3 STEEL DOORS

A. Type: Hollow steel construction manufactured in compliance with ANSI A250.8.

B. Thickness: 1-3/4 inches.

C. Fabrication:

1. Edges: Smooth, seamless, unbroken edges with no visible seams along hinge, lock, and face surfaces. Interlocking joints shall be tack welded, filled, and ground smooth.

2. Exterior doors: Close top and bottom edges flush as integral part of door. Seal joints against water penetration.

3. Prepare doors to receive hardware in accordance with ANSI A250.6. Provide hardware reinforcement plates welded in place. Coordinate with hardware supplier to ensure proper preparation of doors for mounting hardware items.

6. Manufacturing tolerances: Comply with SDI 117.

7. Door numbers: Permanently stamp hinge side of door with reference number as designated on Drawings.

D. Exterior flush panel doors:

1. ANSI A250.8 Grade: Level III - Extra Heavy Duty, Model 2.

2. Face sheet: 16 gage minimum, galvanized steel sheet.

3. Core: Polystyrene rigid insulation.

4. Sound transmission class: STC 31, minimum.

E. Interior flush panel doors:

1. ANSI A250.8 Grade: Level II - Heavy Duty, Model 2.

2. Face sheet: 18 gage minimum, cold rolled steel sheet.

3. Core: Honeycomb.

4. Sound transmission class: STC 33, minimum.

2.4 VISION LITES

A. For exterior, insulated, hollow steel, flush panel doors, provide vision lites as indicated on Drawings.

B. Type: Rectangular, metal glazing frames and moldings that are flush with door face.

C. Nominal size: 24 by 30 inches.

D. Material: 18 gage cold rolled steel hot dipped galvanized.

E. Glazing stops: Rectangular profile. Exterior stop to be non-removable. Interior stop to be removable snap-on type or attached with countersunk screws.

F. Finish: Factory primed.

G. Glazing: Factory glaze doors with glazing as specified in Section 08 80 00 - Glazing:

1. Exterior doors: 1 inch thick, clear, insulating, Low-E, double pane, safety glass.

2.5 DOOR FRAMES

A. Type: Hollow steel construction manufactured in compliance with ANSI A250.8.

B. Fabrication:

1. Fabricate frames as welded units. Welds shall be full length of joint and ground smooth.

2. Mortise, reinforce with plates, and drill frames to receive hardware in accordance with ANSI A250.6. Coordinate with hardware supplier to ensure proper preparation of frames for mounting hardware items.

3. Prepare door frames for 3 silencers.

C. Profile: Combination type with integral stop and trim of size and configuration shown on Drawings. Minor variations to accommodate manufacturer's standard fabrication are acceptable.

D. Exterior door frames:

1. ANSI A250.8 Grade: Level III - Extra Heavy Duty.

2. Material: 14 gage minimum, galvanized steel sheet.

E. Interior door frames:

1. ANSI A250.8 Grade: Level II - Heavy Duty.

2. Material: 16 gage minimum, cold rolled steel sheet.

H. Provide anchors for mechanical attachment of frames to adjacent structure. Provide 3 anchors minimum for each door jamb.

1. Masonry: T strap or strap and stirrup adjustable anchors for embedment in mortar joints.

2. Metal studs: 18 gage steel jamb anchors designed for screw attachment to webbing of double stud jamb.

3. Floor anchors: 18 gage, adjustable base anchor for direct attachment to floor.

4. Anchors for galvanized frames shall have hot dip galvanized finish.

2.6 FACTORY APPLIED FINISHES

A. Cold rolled steel doors and frames:

1. Preparation: In accordance with SSPC-SP 1, clean with non-petroleum solvent to remove oil, dirt, grease, and other contaminants. Remove mill scale and rust to comply with SSPC SP 5 or SSPC SP 8.

2. Pretreatment: Immediately after preparation, apply conversion coating compatible with primer.

3. Primer: Immediately after pretreatment, apply primer to prepare units for site applied paint finish.

B. Galvanized steel doors and frames:

1. Preparation: Clean with non-petroleum solvent to remove oil, dirt, grease, and other contaminants. Clean welds, mechanical connections, and abraded areas and apply galvanizing repair paint in accordance with ASTM A780.

2. Pretreatment: Apply conversion coating compatible with primer.

3. Pretreatment: Immediately after preparation, apply conversion coating compatible with primer.

4. Primer: Immediately after pretreatment, apply primer to prepare units for site applied paint finish.

PART 3 - EXECUTION

3.1 INSTALLATION

A. Install in accordance with approved shop drawings, manufacturer's instructions, and ANSI A250.11.

B. Placing Frames:

1. Place frames before constructing enclosing walls and ceilings.

2. Center in opening, plumb, square and level.

3. Door jamb anchors: Install 3 minimum each jamb at hinge and strike locations.

4. Floor anchors: Install anchor directly to floor at each jamb.

C. Insulating hollow steel frames: Install foam insulation in exterior and interior hollow steel door frames in accordance with manufacturer's instructions.

1. Install by pumping to uniform monolithic density without voids.

2. Protect adjacent surfaces and immediately remove over spray and foam extruded door and window frames.

D. Seal joints around frames in accordance with Section 07 92 00 - Joint Sealants.

E. Hardware: Install door hardware in accordance with Section 08 71 00 - Door Hardware. Locate hardware as indicated on approved shop drawings or, if not indicated, in accordance with DHI Recommended Locations for Architectural Hardware for Standard Steel Doors and Frames.

F. Door installation: Fit steel doors accurately in frames in accordance with ANSI A250.8.

H. Glazing: Install glass in hollow steel sidelight and transom frames in accordance with Section 08 80 00 - Glazing.

3.2 ADJUST AND CLEAN

A. Immediately after erection, sand smooth all rusted and damaged areas of prime coat. Touch-up with compatible, air-drying primer.

B. Check and readjust hardware items, leaving doors and frames in proper operating condition.

END OF SECTION

SECTION 08 14 00

WOOD DOORS

PART 1 - GENERAL

1.1 SUMMARY

A. Section includes: Non-rated interior wood doors and vision lites.

B. Related sections:

1. Section 08 11 00 - Hollow Steel Doors and Frames: Hollow metal frames for wood doors.

2. Section 08 71 00 - Door Hardware: Finish hardware for wood doors.

3. Section 08 80 00 - Glazing: Glass for vision lights in wood doors.

1.2 REFERENCES

A. American National Standards Institute (ANSI):

1. ANSI A208.1 - Particleboard, Mat-Formed Wood.

B. American Woodwork Institute (AWI) - AWI Quality Standards.

C. California Department of Health Services: Standard Practice for the Testing of Volatile Organic Emissions From Various Sources Using Small-Scale Environmental Chambers, including 2004 Addenda.

D. CPSC 16 CFR 1201 - Consumer Product Safety Commission Safety Standard for Architectural Glazing Materials.

1.3 SUBMITTALS

A. Submit in accordance with Section 01 33 00 - Submittal Procedures:

1. Product data for wood doors including:

a. Door core and edge construction.

b. Veneer species, cut, and matching.

c. Factory finish materials and application.

d. Vision lights.

2. Shop drawings indicating door elevations, dimensions, swings, size and location of blocking for hardware cutouts for vision lights, and details for fabrication and installation.

3. Door schedule: Use same reference numbers as indicated in Contract Documents.

4. Samples:

   a. Factory finishes for selection by Architect.

   b. 8 by 10 inch minimum door panel sample illustrating selected finished face, core, edges, and corner.

5. Manufacturer's instructions for preparing, hanging, installing hardware, and adjusting wood doors.

6. Copy of warranty required by Paragraph 1.7 for review by Architect.

1.4 QUALITY ASSURANCE

A. Conform to requirements of AWI Quality Standards, Section 1300 - Architectural Flush Doors.

1.5 PRODUCT HANDLING

A. Protect doors by packaging and other means during delivery, storage, and handling to prevent damage and warpage.

B. Site storage: Store flat on level surface in clean, dry, well ventilated area. Protect from sunlight. Cover to keep clean, but permit air circulation.

C. Do not drag one door across another.

D. Identify each door with opening number used on shop drawings.

1.6 SITE CONDITIONS

A. Do not deliver and install wood doors until site conditions have been stabilized and will be maintained at:

   1. Temperature: 60 to 90 degrees F.

   2. Relative humidity: 25 to 50 percent.

1.7 WARRANTY

A. Submit in accordance with Section 01 78 00 - Closeout Submittals:

   1. Warranty to cover repair or replacement of defective interior wood doors for life of initial installation including:

      a. Materials and workmanship.

      b. Bowing, cupping, and twisting greater than 1/4 inch for 42 by 84 inch door panel.

      c. Telegraphing of core through veneer exceeding 0.01 inch in 3 inches.

      d. Delamination.

PART 2 - PRODUCTS

2.1 ACCEPTABLE MANUFACTURERS

A. Algoma Hardwoods, Inc., Algoma, Wisconsin; 800-678-8910; www.algomahardwwds.com.

B. Eggers Industries, Neenah, Wisconsin; 920-722-6444; www.eggersindustries.com.

C. Graham, Mason City, Iowa; 800-587-6441; www.grahamdoors.com.

D. Marshfield Door Systems Inc., Marshfield, Wisconsin; 800-869-3667; www.marshfielddoors.com.

E. Mohawk Flush Doors, Inc., Northumberland, Pennsylvania; 570-473-3557.

F. VT Industries, Inc., Holstein, Iowa; 800-827-1615; www.vtindustries.com.

G. Requests to use equivalent products of other manufacturers shall be submitted in accordance with Section 01 25 13 - Product Substitution Procedures.

2.2 FLUSH DOORS

A. Type: Flush interior doors, 1-3/4 inches thick, solid core, 5 ply construction with wood veneer suitable for transparent finish.

B. Construction: 5 plies with stiles and rails bonded to core and assembly sanded prior to gluing crossband and face veneer to each side of core. Comply with AWI Section 1300, PC-5, Premium Grade.

C. Core: Particleboard, ANSI A208.1 1-L-1 Grade.

1. Minimum recycled content: 50 percent post industrial wood waste such as sawdust, shavings, and lumber scraps.

2. Core bonding adhesive: Resins complying with ANSI A208.1 formaldehyde limits. Adhesive shall not contain urea-formaldehyde resin.

3. Blocking: Provide 5 inch wide minimum wood blocking for installation of locksets, closers, exit devices, kick plates, and other hardware items and eliminate need for through-bolting.

4. Bonding: Glue stiles and rails to core and sand core assembly prior to applying faces.

D. Stiles: 1-3/8 inch minimum hardwood, same species as face veneer with no visible joints.

E. Top and bottom rails: 1-1/8 inches minimum solid wood.

F. Wood veneer:

1. Species: Plain sliced birch, AWI Grade A, suitable for transparent finish.

2. Matching:

   a. Center balance matching: Provide an even number of equal width veneer leaves from same flitch.

   b. Book matched: Veneers arranged in sequence with adjacent leaves forming mirror-like image.

   c. Pair matching: Provide for doors hung in same opening.

G. Finish: Factory finish wood doors in accordance with AWI Quality Standard Section 1500, System TR-6, Custom Quality.

   1. Type: Water-based stain followed by transparent ultraviolet cured, catalyzed polyurethane finish.

   2. Color: As selected by Architect from manufacturer's full range.

   3. Grain effect: Filled finish.

   4. Sheen: Satin semi-gloss.

   5. Seal top door edge with color sealer to match door facing.

2.3 VISION LITES

A. Provide vision lites of dimensions and configurations indicated on Drawings.

B. Type: Metal frame with countersunk mounting holes.

C. Nominal size: 20 by 32 inches

D. Material: 18 gage cold rolled steel hot dipped galvanized.

E. Finish: Factory primed.

F. Glazing as specified in Section 08 80 00 - Glazing: 1/4 inch clear filly tempered safety glass.

G. Glazing stops: Rectangular profile. Exterior stop to be non-removable. Interior stop to be removable snap-on type or attached with countersunk screws.

H. Factory prepare door with cutout to receive vision light. Ship light separately as kit to be field installed in order to prevent damage to door finish.

2.5 FACTORY FITTING

A. Factory fit doors to coincide with designated frame opening sizes with these clearances and bevels:

   1. Non-rated door clearances:

      a. Head, jamb, and between double doors: 1/8 inch.

      b. Bottom of door to floor finish: 1/8 inch.

      c. Bottom of door to top of threshold: 1/4 inch.

2. Lock and hinge door edges shall be beveled 1/8 inch in 2 inches.

B. Factory machine doors to receive hardware in accordance with AWI requirements, Section 08 71 00 - Door Hardware, and supplied hardware templates.

1. Machine cut relief for hinges and coring for locksets, cylinders, and other items.

2. Pilot drill screw and bolt holes.

C. Seal cut surfaces after fitting and machining. Ensure that hardware recess edges are sealed with minimum two coats varnish.

PART 3 - EXECUTION

3.1 PREPARATION

A. Inspect door and frames prior to hanging. Reject doors with defects. Verify frames are correct size and type, securely anchored, heads are level, and jambs are plumb.

B. Do not proceed until deficiencies are addressed.

3.2 INSTALLATION

A. Install wood doors in accordance with approved shop drawings, manufacturer's instructions, and AWI Custom Quality Standards.

B. Hang doors and install hardware and vision lights.

C. Fitting: Align and fit doors in frames with uniform clearances and bevels. Do not trim stiles and rails in excess of limits of manufacturer. Ensure that clearances specified in Paragraph 2.5.A are maintained.

D. Restore factory applied door finish if site fitting and machining is required.

E. Adjust hung doors for smooth and balanced movement. Rehang or replace doors that do not operate freely.

END OF SECTION

SECTION 08 31 00

ACCESS DOORS AND PANELS

PART 1 - GENERAL

1.1 SUMMARY

A. Section includes: non-rated access doors and frames.

B. Related sections:

1. Section 09 21 16 - Gypsum Board Assemblies: Openings in metal stud and gypsum board partitions and ceilings.

2. Section 09 91 00 - Painting: Field painting of access doors.

3. Division 22 - Plumbing, Division 23 - Heating, Ventilating, and Air-Conditioning (HVAC), and Division 26 - Electrical: Requirements to provide access to concealed expansion joints, valves, traps, and other mechanical and electric equipment.

1.2 SUBMITTALS

A. Provide in accordance with Section 01 33 00 - Submittal Procedures:

1. Product data.

2. Manufacturer's installation instructions.

PART 2 - PRODUCTS

2.1 ACCEPTABLE MANUFACTURERS

A. CESCO Products, Minneapolis, Minnesota; 800-241-9344.

B. J.L. Industries, Inc., Bloomington, Minnesota; 612-835-6850.

C. Milcor Incorporated, Lima, Ohio; 800-528-1411.

D. Requests to use equivalent products of other manufacturers shall be submitted in accordance with Section 01 25 13 - Product Substitution Procedures.

2.2 NON-RATED ACCESS DOOR UNITS

A. Type: Flush mounted, hinged access door and frame suitable for gypsum board walls and ceilings.

B. Bead on outer frame for receiving gypsum board joint compound.

C. Material:

1. Door: 14 gage steel.

2. Frame: 16 gage steel.

D. Hardware:

1. Concealed hinge opening to 165 degrees minimum.

2. Flush, screwdriver-operated lock.

E. Finish: Phosphate dipped steel with prime coat to be field painted to match adjacent surfaces as specified in Section 09 91 00 - Painting.

PART 3 - EXECUTION

3.1 PLACEMENT

A. Provide access doors where shown on the Drawings and as required to provide access to concealed equipment and components for inspection, maintenance, and replacement.

B. Provide sizes shown on Drawings or as required to provide functional access.

3.2 INSTALLATION

A. Verify rough openings for door and frame are correctly sized and located.

B. Position access unit to provide convenient access to concealed work requiring access.

C. Install frame plumb and level in wall opening.

D. Secure rigidly in place in accordance with manufacturer's instructions.

END OF SECTION

SECTION 08 33 13

COILING COUNTER DOORS

PART 1 - GENERAL

1.1 SUMMARY

A. Section includes: Manually operated, coiling, stainless steel counter doors including operating mechanisms, track, door frame, hardware, locks, and accessories for Kitchen.

B. Related sections:

1. Section 05 50 00 - Metal Fabrications: Stainless steel surfaced counters.

2. Section 09 21 16 - Gypsum Board Assemblies: Construction of openings in metal stud and gypsum board partition to receive coiling counter doors.

3. Section 11 40 00 - Food Service Equipment: Stainless steel tables and other equipment.

1.2 REFERENCES

A. ASTM A480 - General Requirements for Flat-Rolled Stainless and Heat Resisting Steel Plate, Sheet, and Strip.

1.3 SUBMITTALS

A. Submit in accordance with Section 01 33 00 - Submittal Procedures:

1. Product data listing components, hardware, and accessories and describing construction and operation.

2. Shop drawings showing dimensions, trim, hardware and head, jamb, counter, and other details. Drawings shall reflect actual Project conditions with required clearances for to adjacent construction components.

3. Installation instructions.

4. Operation and maintenance data.

1.4 QUALITY ASSURANCE

A. Manufacturer: Company currently manufacturing overhead coiling counter doors with 5 years minimum successful experience.

B. Installer: Experienced in the installation of overhead coiling counter doors and approved by the door manufacturer.

PART 2 - PRODUCTS

2.1 ACCEPTABLE MANUFACTURERS

A. The Cookson Company, Phoenix, Arizona; 602-272-4244.

B. Cornell Iron Works, Inc., Mountaintop, Pennsylvania; 800-233-8366.

C. Overhead Door Corporation, Dallas, Texas; 800-887-3667.

D. Requests to use equivalent products of other manufacturers shall be submitted in accordance Section 01 25 13 - Product Substitution Procedures.

2.2 COUNTER DOORS

A. Type: Interior hand crank manual operation, overhead coiling counter doors furnished complete with guides, hardware, fastenings, operating mechanism, and accessories, and mounted on face of wall; Model KFI-1F as manufactured by Cornell Iron Works.

B. Curtain: Interlocking 22 gage ASTM 480 stainless steel, flat-faced slats, 1-1/2 inches high by ½ inch deep.

C. Nominal opening size: 48 inches wide by 48 inches high.

D. Operation: Hand crank with removable awning type crank and 25 pounds maximum operating force.

E. Bottom rail: 3 by 2 inch stainless steel angle with stainless steel trim providing tubular section for cylinder lock. Equip bottom rail with PVC astragal.

F. Curtain guides: Heavy duty extruded aluminum sections.

G. Counterbalance assembly: Steel pipe with main and auxiliary spring system capable of producing sufficient torque to ensure easy operation of curtain from any position. Barrel shall be designed to limit deflection to 0.03 inch per foot of opening.

H. Hood: Rectangular enclosure fabricated from 24 gage stainless steel.

I. Door assembly finish: No. 4 stainless steel.

J. Unit shall be self supporting. Provide brackets, plates, fasteners, bracing, and other components to securely anchor to adjacent construction. Provide required bracing.

K. Provide with cylinder lock in bottom rail of door.

L. Provide channel shaped, 16 gage stainless steel frame for jambs and head of coiling counter door openings. Fabricate frame in accordance with and Section 05 50 00 - Metal Fabrications.

PART 3 - EXECUTION

3.1 INSTALLATION

A. Prior to fabrication or submittal of shop drawings, field verify size of openings and clearances. Determine installation conditions and requirements.

B. Install door assemblies in prepared openings in Kitchen 105 in accordance with reviewed shop drawings and manufacturer's instructions.

C. Coordinate provision of counter doors with fabrication of stainless steel pass through counters specified in Section 05 50 00 - Metal Fabrications and provision of equipment specified in Section 11 40 00 - Food Service Equipment.

D. Use appropriate anchorage devices to securely fasten assembly to wall construction and building framing. Rigidly brace components suspended from structure.

E. Doors shall be lubricated and properly adjusted to manufacturer's specifications to operate freely. Completed assemblies shall be free from warp, twist, and distortion.

3.2 TESTING AND DEMONSTRATION

A. After installation, test doors by opening and closing a minimum of three times. Correct deficiencies.

B. Remove labels, visible markings, and clean assemblies.

C. Demonstrate operation of counter doors to Owner’s representative in accordance with Section 01 79 00 - Demonstration and Training.

END OF SECTION

SECTION 08 41 14

ALUMINUM DOORS, WINDOWS, AND FRAMING

PART 1 - GENERAL

1.1 SUMMARY

A. Section includes: Aluminum door and window framed assembly (storefront) including these components:

1. Aluminum framed, glazed exterior and interior entrance doors.

2. Extruded tubular aluminum frames for aluminum doors, sidelights, and transoms.

3. Fixed exterior and interior aluminum window framing.

4. Design, fabrication, and installation of self supporting, aluminum framed curtainwall system for windows AF12 and AF13 above exterior entries.

B. Related sections:

1. Section 01 23 00 - Alternates: Additive Alternative No. 6 to provide automatic sliding entrance door systems specified in Section 08 42 30 - Automatic Sliding Entrance Doors in lieu of hinged doors specified in this Section with automatic operators specified in Section 08 71 13 Automatic Door Operators.

2. Section 07 62 00 - Sheet Metal Flashings and Trim: General requirements for fabricating aluminum sheet trim and closure pieces for aluminum framing system and provision of exterior aluminum sun shades.

3. Section 07 92 00 - Joint Sealants: Sealants for perimeter of aluminum framing.

4. Section 08 71 00 - Door Hardware: Additional hardware for aluminum doors.

5. Section 08 80 00 - Glazing: Glass for aluminum frames and doors.

1.2 REFERENCES

A. American Society of Civil Engineers (ASCE):

1. ASCE 7 - Minimum Design Loads for Buildings and Other Structures.

B. Aluminum Association (AA): AA-M12 C22 A31 - Standard for Clear Anodic Coatings.

C. American Architectural Manufacturers Association (AAMA):

1. AAMA 501: Methods of Test for Exterior Walls.

2. AAMA 607.1: Specification for Clear Anodic Finishes for Architectural Aluminum.

3. AAMA 1503 - Test Method for Thermal Transmittance and Condensation Resistance of Windows, Doors, and Glazed Wall Sections.

D. American Society for Testing and Materials (ASTM):

1. ASTM A123 - Zinc (Hot-Dip Galvanized) Coatings on Iron and Steel Products.

2. ASTM B209 - Aluminum and Aluminum-Alloy Sheet and Plate.

3. ASTM B221 - Aluminum-Alloy Extruded Bar, Rod, Wire, Shape, and Tube.

4. ASTM E283 - Test Method for Rate of Air Leakage Through Exterior Windows, Curtain Walls, and Doors by Uniform Static Air-Pressure Difference.

5. ASTM E330 - Test Method for Structural Performance of Exterior Windows, Curtain Walls, and Doors by Uniform Static Air Pressure Difference.

6. ASTM E331 - Test Method for Water Penetration of Exterior Windows, Curtain Walls, and Doors by Uniform Static Air Pressure Difference.

1.3 DESIGN REQUIREMENTS

A. Design aluminum framed door and window assemblies including anchorage to meet performance requirements specified in Paragraph 1.4.

B. System to accommodate movement of components without buckling, failure of joint seals, undue stress on fasteners and glazing units, reduction of performance or other detrimental effects:

1. When subjected to expansion and contraction caused by seasonal temperature range of 180 degrees F.

2. To accommodate tolerances of structure.

C. Fabricate and install system with concealed fasteners to the extent possible.

D. Provide visual design concept and configuration shown on Drawings.

E. Attachments to building structure and connections system components shall be designed to preclude loosening, weakening, and fracturing due to thermal expansion and contraction and other building and system movement.

F. Design structural support framing components for curtainwall system under supervision of professional structural engineer and licensed in the State of New Mexico.

G. Design anchors, fasteners, and braces for maximum stress of 50 percent of allowable material stress when maximum loads are applied.

1.4 PERFORMANCE REQUIREMENTS

A. Design, fabricate, and install aluminum framed door and window assemblies including anchorage to:

1. Resist loads as determined by ASCE or required by authorities having jurisdiction, whichever is more stringent. System shall withstand effect of loads without causing material failures, structural distress, failure of operating components to function normally, and permanent deformation.

a. Wind loads.

b. Seismic loads.

c. System dead loads.

d. Applied live loads.

2. Air infiltration: System to provide resistance to air leakage of these limits when tested in accordance with ASTM E283 at static air pressure difference of 6.24 PSF.

a. Air infiltration for fixed window area: 0.06 CFM/SF maximum.

b. Air infiltration for single door in frame: 0.50 CFM maximum per linear foot of perimeter crack.

3. Water penetration: System shall have no measurable water penetration when tested in accordance with ASTM E331 at differential pressure of 8 PSF as defined by AAMA 501.

4. Static-pressure performance: When tested in accordance with ASTM E330 system shall not fail and maximum permanent deformation of main framing members shall not exceed 0.2 percent of clear span.

5. Deflection:

a. When subjected to specified design pressures, maximum deflection of framing member in direction normal to wall plane shall be:

(1) Spans up to and including 13'-6": 1/175 of member clear span.

(2) Spans greater than 13'-6": 1/360 of member clear span plus 1/4 inch.

b. When carrying full dead load, framing members shall not deflect an amount which will reduce glazing bite below 75 percent of design dimension.

6. Average thermal conductance: Tested in accordance with AAMA 1503.1. Average U-value for complete system shall be 0.63 maximum.

7. Condensation resistance factor (CRF): Tested in accordance with AAMA 1503, condensation resistance factor shall be 45 minimum.

1.5 SUBMITTALS

A. Submit in accordance with Section 01 33 00 - Submittal Procedures:

1. Product data.

2. Shop drawings showing elevations, dimensions, tolerances, components, anchorage, method of installation, and other details.

a. Provide fabrication and installation details for sheet aluminum trim pieces for closures, window sills, covers for junctures with other materials from sheet aluminum.

b. Structural drawings for curtainwall system shall bear stamp of professional structural engineer licensed in State of New Mexico.

3. Certificates that products have been successfully tested as required by Paragraph 1.4.A.

4. Documentation verifying installers' qualifications specified in Paragraph 1.6.D.

5. Manufacturer's installation and maintenance instructions.

6. Copies of warranties required by Paragraph 1.7 for review by Architect.

1.6 QUALITY ASSURANCE

A. All aluminum doors and framing shall be components of a single manufacturer.

B. Door hardware for glazed aluminum doors shall be provided by manufacturer of aluminum door and framing system and installed by system installer. Warranty for system shall cover hardware.

C. Sole installation responsibility: The following components shall be installed by a single installer:

1. Aluminum doors, frames, and fixed windows specified in this Section.

2. Aluminum sheet trim and closure pieces specified in Section 07 62 00 - Sheet Metal Flashings and Trim.

3. Hardware for aluminum doors specified in Section 08 71 00 - Door Hardware and this Section.

4. Glazing for aluminum doors and frames specified in Section 08 80 00 - Glazing.

D. Installer shall be approved by manufacturer and have 3 years minimum experience installing aluminum entrances and storefronts.

1.7 WARRANTIES

A. Provide under provisions of Section 01 78 00 - Closeout Submittals:

1. Manufacturer's 2 year warranty to cover:

a. Structural failure including excessive deflection.

b. Deterioration of metal, metal finishes, and other system materials.

c. Defective materials including glass breakage due to defective design or fabrication.

d. Failure of operating components to function properly.

e. Replacement of components which fail within 2 years of date of substantial completion.

2. Installer's 2 year warranty to cover:

a. Structural failure including excessive deflection due to improper or defective installation.

b. Defective workmanship resulting in glass breakage due to improper installation.

c. Failure of operating components to function properly due to defective installation.

d. Replacement of components which fail due to improper or defective installation within 2 years of date of substantial completion.

e. Response to requests for warranty repair within 24 hours of receiving notice that such repairs are required.

PART 2 - PRODUCTS

2.1 ACCEPTABLE MANUFACTURERS

A. Aluminum doors, window units, and framing:

1. Kawneer Company, Inc., Northcross, Georgia; 404-449-5555.

2. Tubelite, Inc., Reed City, Michigan; 616-832-2211.

3. Oldcastle Building Envelope, Santa Monica, California; 866-653-2278; www.oldcastleglass.com.

B. Requests to use equivalent products of other manufacturers shall be submitted in accordance with Section 01 25 13 - Product Options and Substitutions.

2.2 MATERIALS

A. Extruded aluminum: ASTM B221, 6063-T5 alloy and temper.

B. Sheet aluminum: ASTM B209, 5005-H16 alloy and temper.

C. Exposed fasteners: Non-corrosive stainless steel, plated steel, or aluminum. Type compatible with items being fastened.

D. Anchors: Aluminum or steel assemblies of shapes, plates, bars, or tubes. Steel assemblies shall be hot-dipped galvanized with ASTM A123, 2 ounce minimum coating.

E. Glazing gaskets: EPDM elastomeric extrusions.

F. Provide extrusions and other accessories to accommodate expansion and contraction due to temperature changes without detriment to appearance or performance.

G. Weatherstripping, Sealair as provided by Kawneer Company, Inc.

1. Door and frame weatherstripping: Dense, bulb polymeric material resistant to temperature extremes.

2. Door sweep: Provide door bottom rail with EPDM blade gasket sweep attached with concealed fasteners.

H. Finishes:

1. Exposed aluminum surfaces:

a. Free of scratches and other serious blemishes.

b. Cystic etch aluminum followed by anodic oxide treatment to obtain Architectural Class II 0.4 mil minimum thick, clear anodic coating conforming to AAMA 607.1 and AA-M12 C22 A31; No. 17 Finish as provided by Kawneer Company, Inc.

2. Concealed steel items: Galvanized or factory coated with alkyd type zinc chromate primer complying the FS-TT-P-645.

3. Apply one coat of bituminous paint to concealed aluminum and steel surfaces in contact with cementitious or dissimilar materials.

2.3 ALUMINUM GLAZED DOORS

A. Type: Wide stile, full glazed with intermediate rail, swinging door: 500 Heavy Wall Entrance Door as manufactured by Kawneer Company.

B. Construction: Door corners to resist racking and be mechanically fastened with welded brackets or by the incorporation of tie rods.

C. Member sizes:

1. Door thickness: 2 inches.

2. Tubular material thickness: 3/16 inch minimum.

3. Vertical stile width: 5 inches.

4. Top and intermediate rail width: 5 inches.

5. Bottom rail width: 10 inches.

D. Glazing: As specified in Section 08 80 00 - Glazing.

1. Interior: 1/4 inch thick, monolithic, clear, safety glass.

2. Exterior: 1 inch thick, insulating, clear, safety glass.

E. Glazing stops: Extruded aluminum, snap-in square type with preformed EPDM gaskets. Provide non-removable glass stop on exterior face of door.

F. Hardware: As specified in Section 08 71 00 - Door Hardware.

G. Labeling: Permanently label hinge edge of door identifying door manufacturer and door number.

2.4 EXTERIOR ALUMINUM FRAMES

A. Type: System of extruded aluminum rectangular tubular sections with thermal break construction to be field assembled and front glazed; TRIFAB VG (Versa Glazed) 451T Framing System as manufactured by Kawneer Company, 3000 Thermal Multiplane Series as manufactured by Oldcastle Glass, or T14000 as manufactured by Tubelite, Inc.

B. Member sizes: 2 by 4-1/2 inches.

C. Style:

1. Designed for center glazing with no projecting stops.

2. Thermal break: Two-part construction eliminating all metal-to-metal contact between exterior and interior of frame.

D. Glazing installed from outside with elastomeric extrusions: 1 inch insulating, clear glass as specified in Section 08 80 00 - Glazing.

2.5 INTERIOR ALUMINUM FRAMES

A. Type: System of extruded aluminum rectangular tubular sections to be field assembled and front glazed; TRIFAB VG (Versa Glaze) 450 Framing System as manufactured by Kawneer Company, Series 2000 as manufactured by Oldcastle Glass, or E4500 Series as manufactured by Tubelite, Inc.

B. Member sizes: 1-3/4 by 4-1/2 inches.

C. Style: Flush center glazing with no projecting stops.

D. Where aluminum frames are indicated to receive wood door, provide snap-in door stop suitable for wood door.

E. Glazing: 1/4 inch thick, monolithic, clear glass as specified in Section 08 80 00 - Glazing. Provide elastomeric extrusions for installation.

2.6 DOOR FRAME REINFORCEMENT

A. Provide both exterior and interior doors and door frames with reinforcement as specified in this Paragraph. Door frames shall accommodate both 1-3/4 and 2 inch thick doors.

B. Doors and door frames shall be reinforced with 1/4 inch minimum thick internal steel back-up material sufficient for attaching specified hardware. Door frame extrusion shall be non-thermal broken with 3/16 inch minimum wall thickness for hardware mounting with integral door stops as part of extrusion. Snap-in or screw applied door stops are not acceptable. Door stops must provide uninterrupted weathering for entire length of stop.

C. Hardware reinforcement for hinging shall run continuous for full length of door jamb.

D. Hardware reinforcement for lock strikes and closers shall be located within door and frame to accommodate specified hardware.

2.7 CURTAINWALL FRAMING SYSTEM

A. Type: Self-supporting curtainwall system with pressure plates and covers securing glass vertically and horizontally on all 4 sides without exposed fasteners; 1600 UT 1 Curtain Wall manufactured by Kawneer Company.

B. Member sizes: 2-1/2 by 6 inches.

C. Performance requirements:

1. Air infiltration: Less than 0.06 CFM per square foot of fixed area tested in accordance with ASTM E283.

2. Water infiltration: No penetration at test pressure of 15 PSF and water rate of 5 gallons per hour per SF tested in accordance ASTM E331.

3. Structural performance: Design and size components to withstand loads as calculated in accordance with applicable codes. System to withstand effects of:

   a. Applicable wind load acting inward and outward normal to plane of wall.

   b. Seismic loads and sway displacement.

   c. Thermal load: -10 degrees F to 100 degrees F.

4. Assembly shall accommodate without damage to system, components, and deterioration of seals:

   a. Movement within system.

   b. Movement between system and perimeter framing components.

   c. Deflection of structural support framing.

   d. Tolerances of supporting components.

5. Maximum deflection of framing members perpendicular to wall: L/175.

6. Deflection of members parallel to wall shall not reduce glass bite by more than 75 percent of design dimension.

7. Condensation resistance factors (CRF) tested in accordance with AAMA 1503.1:

   a. Frame: 70.

   b. Glass: 56.

8. System shall accommodate glazing specified in Section 08 80 00 - Glazing.

2.8 FABRICATION

A. Prior to fabrication and submittal of shop drawings, field verify dimensions and site requirements for door and window opening.

B. Fabricate and internally reinforce doors, windows, and framing to withstand applied loads and to meet requirements specified in Paragraphs 1.3 and 1.4.

C. Ensure thermal break is provided between exterior and interior aluminum surfaces.

D. Shop fabricate doors and door frames.

E. Fabricate doors and frames allowing for minimum clearances and shim spacing around perimeter of assembly.

F. Fabricate door frames to accept specified hardware without compromising weather seals around doors.

G. Rigidly fit and secure joints and corners with internal reinforcements. Make joints and connections flush, straight, tight, and hairline.

H. Fabricate aluminum assemblies to accommodate expansion and contraction due to temperature changes.

I. Seal horizontal framing members and direct moisture accumulation to exterior.

J. Reinforce doors and door frames with 1/8 inch minimum thick, internal ASTM 36 carbon steel back-up plates sufficient for attaching specified hardware.

K. Door stops: One-piece type, not broken at hardware latch keeper, and mechanically anchored.

L. Arrange fasteners, attachments, and jointing to ensure concealment from view. For exposed locations, provide Phillips screws with finish matching item fastened.

M. Prepare components with internal reinforcement for door hardware. Coordinate with provision of hardware specified in Section 08 71 00 - Door Hardware.

N. Welding: Conform to requirements of AWS D1.1 using recommended electrodes and methods to avoid distortion and discoloration. Grind welds smooth and flush with adjacent surfaces and restore applied finish.

O. Install weatherstripping on doors, operable windows, and frames as detailed on reviewed shop drawings and ensure weathertight installation.

P. Fabricate trim pieces and closures and junctures with other materials from sheet aluminum as detailed on Drawings and reviewed shop drawings.

PART 3 - EXECUTION

3.1 PREPARATION

A. Inspect openings and verify that supports, auxiliary framing, and other work are adequate and complete so that aluminum framing may be properly installed.

3.2 INSTALLATION

A. Install aluminum framing, doors, and windows in accordance with manufacturer's instructions and reviewed shop drawings. Do not install bent, dented, scratched, or otherwise damaged components.

1. Exterior framing: Framing specified in Paragraph 2.4.

2. Interior framing: Framing specified in Paragraph 2.5.

3. Windows AF12 and AF13 above exterior entries to Vestibule 107 and Lounge 109: Curtainwall framing system specified in Paragraph 2.7.

B. Separate dissimilar materials at contact points, including contact with masonry and concrete. Separate with bituminous paint or preformed separators.

C. Use anchorage devices to securely attach frame assembly to structure.

D. Align framing plumb and level, free of warp or twist.

E. Allow for settling, expanding, and contracting to occur without deforming framing or breaking glass.

F. Erection tolerances:

1. Limit variations from plumb and level:

a. 1/8 inch in 10 feet vertically.

b. 1/8 inch in 20 feet horizontally.

2. Limit variations from theoretical locations: 1/4 inch for any member at any location.

3. Limit offsets in theoretical end-to-end and edge-to-edge alignment: 1/16 inch from flush surfaces that are not more than 2 inches apart or out-of-flush by more than 1/4 inch.

G. Pack fibrous insulation in shim spaces at perimeter of framing to maintain continuity of thermal barrier.

H. Install perimeter sealant and backing materials as detailed on Drawings and reviewed shop drawings and in accordance with requirements of Section 07 92 00 - Joint Sealants.

I. Install glass in accordance with Section 08 80 00 - Glazing.

1. Aluminum doors shall be shop glazed.

2. At Contractor's option, fixed aluminum framed windows shall be field or shop glazed.

J. Install aluminum trim pieces, window sills, and closures and junctures with other materials in accordance with reviewed shop drawings to provide secure, neat, weathertight installation. To extent possible, fasteners shall be concealed.

K. Install door hardware in accordance with requirements of Section 08 71 00 - Door Hardware.

L. Installation of hinged Doors 107.1 and 109.1 in Vestibule 107:

1. As part of Base Bid, equip door pairs with automatic electrical operators specified in Section 08 71 13 - Automatic Door Operators.

2. For Additive Alternate No. 6, replace doors with automatic, sliding, sensor activated door assemblies specified in Section 08 43 30 - Automatic Sliding Entrance Doors.

3.3 ADJUSTING AND CLEANING

A. Test door operating functions. Adjust closing and latching speeds and other hardware in accordance with manufacturer's instructions to ensure smooth operation.

B. Remove protective material from prefinished aluminum surfaces.

C. Wash exposed surfaces using a solution of mild detergent in warm water, applied with soft, clean cloths. Do not use abrasives. Take care to remove dirt from corners. Wipe surfaces clean.

D. Remove excess sealant by moderate use of mineral spirits or other solvent acceptable to sealant manufacturer.

END OF SECTION

SECTION 08 42 30

AUTOMATIC SLIDING ENTRANCE DOORS

PART 1 - GENERAL

1.1 SUMMARY

A. Section includes:

1. Interior and exterior, automatic sliding door assemblies including, aluminum framing, door leaves, glazing, operator, controls, and motion and presence detectors for Vestibule 107.

2. Maintenance service proposal.

B. Related sections:

1. Section 01 23 00 Alternates: Additive Alternate No. 6 - Automatic Entrance Doors for:

   a. Provision of automatic, sliding, sensor activated, glazed entrance doors specified in this Section.

   b. Provision in lieu of automatic electrical operated, hinged, glazed entrance doors specified in Section 08 41 14 -Aluminum Doors, Windows, and Framing and Section 08 71 13 - Automatic Door Operators.

2. Division 26 - Electrical:

   a. General requirements for providing power and wiring for automatic door assemblies.

1.2 REFERENCES

A. American Architectural Manufacturers Association (AAMA):

1. AAMA 607.1: Specification for Clear Anodic Finishes for Architectural Aluminum.

B. Aluminum Association (AA): AA-M12 C22 A31 - Standard for Clear Anodic Coatings.

C. ANSI 156.10 - Power Operated Pedestrian Doors.

D. ASTM B209 - Aluminum and Aluminum-Alloy Sheet and Plate.

E. ASTM B221 - Aluminum-Alloy Extruded Bar, Rod, Wire, Shape, and Tube.

F. Consumer Product Safety Commission 16 CFR 1201 - Safety Standard for Architectural Glazing Materials.

G. FGMA - Glazing Manual, Flat Glass Marketing Association.

H. ICC UBC Chapter 24 - Glass and Glazing, 1994 Uniform Building Code, International Conference of Building Officials.

1.3 SUBMITTALS

A. Submit in accordance with Section 01330 - Submittal Procedures:

1. Product data.

2. Shop drawings showing plans, elevations, dimensions, tolerances, components, anchorage, method of installation, interface with adjacent construction, wiring diagrams, and other details.

3. Manufacturer's installation instructions.

4. Operation and maintenance manual.

5. Copy of maintenance agreement required by Paragraph 1.5 for review by Owner.

1.4 QUALITY ASSURANCE

A. Manufacturer: Company specializing in manufacturer of automatic sliding doors with 5 years minimum experience.

B. Installer shall be approved by manufacturer and have 3 years minimum experience installing automatic sliding doors.

C. Fabricate and install system in accordance with ANSI 156.10.

D. Comply with safety requirements of following standards. Where discrepancies exist, more stringent requirement shall govern.

1. Consumer Product Safety Commission 16 CFR 1201.

2. ICC UBC.

E. Comply with FGMA - Glazing Manual.

1.5 MAINTENANCE SERVICE

A. Automatic sliding door manufacturer or installer shall be capable of providing maintenance for installed sliding door assemblies. Submit proposal from manufacturer or installer for maintenance service contract including the following minimum services:

1. Maintaining automatic sliding door assembly for 3 years from date of completion with an option to extend for an additional 3 years.

2. Examination of door assembly components each 3 month period. Clean, adjust, and lubricate equipment.

3. Repair or replace parts whenever required. Use parts produced by manufacturer of original equipment.

4. Schedule work so use of door assemblies is not interrupted during normal operation hours.

5. Provide emergency call service with 4 hour response during normal business hours.

6. Maintain an adequate stock of parts for replacement or emergency purposes.

7. Perform maintenance work using competent and qualified personnel under supervision and employ of original installer.

8. Maintenance service shall not be assigned or transferred to any agent or subcontractor without prior written consent of Owner.

PART 2 - PRODUCTS

2.1 ACCEPTABLE MANUFACTURERS

A. Horton Automatics, Corpus Christi, Texas; 800-531-3111; www.hortondoors.com.

B. Stanley Access Technologies, Farmington, Connecticut; 800-722-2377; www.stanleyaccesstechnologies.com.

C. Besam Entrance Solutions, Monroe, North Carolina; 866-237-2687; www.besam-usa,com.

D. Manufacturers of other products submitted and approved in accordance with Section 01 25 13 - Product Substitution Procedures.

2.2 MATERIALS

A. Extruded aluminum: ASTM B221, 6063-T5 alloy and temper, 1/8 inch minimum thickness.

B. Sheet aluminum: ASTM B209.

C. Exposed fasteners: Stainless steel, plated steel, or aluminum.

D. Anchors: Aluminum or steel.

E. Glazing gaskets: EPDM elastomeric extrusions.

F. Finishes:

1. Exposed aluminum surfaces:

   a. Free of scratches and other serious blemishes.

   b. Cystic etch aluminum followed by anodic oxide treatment to obtain Architectural Class II 0.4 mil minimum thick, clear anodic coating conforming to AAMA 607.1 and AA-M12 C22 A31 to match finish of aluminum assemblies specified in Section 08 41 14 - Aluminum Doors, Windows, and Framing.

2. Concealed steel items: Galvanized or factory coated with alkyd type zinc chromate primer complying the FS-TT-P-645.

3. Apply one coat of bituminous paint to concealed aluminum and steel surfaces in contact with cementitious or dissimilar materials.

2.3 DOOR ASSEMBLY

A. Type: Automatic sliding door assembly consisting of an aluminum framing, door leaves, fixed sidelights, glazing, operator, controls, motion and presence detectors, and other components required to provide barrier free automatic building entrance; Series 2001 Automatic Sliding Door as manufactured by Horton Automatics.

B. Configuration: Two bi-parting sliding door leaves and two fixed sidelight leaves for both exterior and interior locations.

C. Nominal assembly size: 16' - 4" wide by 9 feet high providing 7 foot wide opening.

D. Door leaf size: 3' - 6" wide by 7' - 0".

2.4 FRAMING

A. Door and sidelight framing: System of extruded aluminum rectangular sections to be field assembled and center glazed.

B. Exterior frames: Rectangular tubular aluminum sections with thermal break construction:

1. Member sizes: 2 by 4-1/2 inches.

2. Designed for center glazing with no projecting stops.

3. Thermal break: Two-part construction eliminating all metal-to-metal contact between exterior and interior of frame. Frame

4. Glazing installed from outside with elastomeric extrusions: 1 inch insulating, clear glass as specified in Section 08 80 00 - Glazing.

C. Interior frames: Rectangular tubular aluminum sections:

1. Member sizes: 1-3/4 by 4-1/2 inches.

2. Designed for flush center glazing with no projecting stops.

3. Glazing: 1/4 inch thick, monolithic, clear, laminated, safety glass as specified in Section 08 80 00 - Glazing.

D. Frame head:

1. Size: 6-3/4 inches high by 6-1/2 inches deep.

2. Provide lockable, hinged aluminum cover for head to allow access for maintenance and adjustment.

2.5 DOOR LEAVES

A. Type: Wide stile sliding door with intermediate rail.

B. Member sizes:

1. Door thickness: 2 inches.

2. Vertical stile width: 5 inches.

3. Top and intermediate rail width: 5 inches.

4. Bottom rail width: 10 inches.

C. Glazing: As specified in Section 08 80 00 - Glazing.

1. Interior: 1/4 inch thick, monolithic, clear, safety glass.

2. Exterior: 1 inch thick, insulating, clear, safety glass.

D. Glazing stops: Extruded aluminum, snap-in square type with preformed EPDM gaskets. Provide non-removable glass stop on exterior face of door.

2.6 ASSEMBLY HARDWARE

A. Provide manufacturer's standard hardware for operation of sliding door assemblies as indicated on reviewed shop drawings:

1. Overhead track.

2. Carriers: 2 steel 1-3/4 inch diameter wheels and 1 1-1/4 inch diameter anti-rise rollers.

3. Drive belt: Continuous complete unit with mechanically fasteners.

4. Floor guide.

5. Weatherstripping: Heavy pile strip.

B. Provide other hardware as specified in Section 08 71 00 - Door Hardware and as required for complete functional installation.

2.7 FABRICATION

A. Fabricate door assembly for minimum clearances and shim spacing around perimeter of assembly, yet enabling installation.

B. Rigidly fit and secure joints and corners with internal reinforcements. Make joints and connections flush and hairline.

C. Arrange fasteners, attachments, and jointing to ensure concealment from view.

D. Fabricated trim pieces for closures and junctures with other materials from sheet aluminum.

2.8 OPERATOR

A. Operating mechanism shall be electro-mechanical microprocessor controlled, fully adjustable power operator which upon receiving signal shall move door at required speed.

B. Performance requirements:

1. Accommodate 300 pounds minimum single slide door.

2. Operate within temperature range of minus 10 degrees F to 122 degrees F.

C. Motor: Gearless 24VDC, 5 amps maximum, UL listed.

D. Electrical requirement: 115V, 60 Hz, 10 amp dedicated service with solid ground connection.

2.9 OPERATION

A. Sliding door shall be powered open and closed by direct drive unit with gearless motor attached to a closed loop cogged belt.

B. Door shall close after remaining open for pre-set time delay between 1 and 30 seconds. Door shall return at normal speed until microprocessor signal is received causing slowing of door until fully closed position is reached.

C. Emergency breakaway: Emergency release hardware shall allow door and sidelight to swing out 90 degrees from any position in sliding mode with 50 pounds maximum pressure.

D. Opening control: Equip with key switch on interior jamb for the following opening settings:

1. Off.

2. Exit only.

3. Two way traffic.

4. Partial opening. Door opening automatically resumes full open position when traffic flow exceeds pre-set volume and when traffic subsides, door returns to partial opening mode.

5. Fully open.

E. Obstruction sensing:

1. Obstruction sensed during closing cycle shall result in returning door to full open position.

2. Obstruction sensed during opening cycle shall result in complete stop of door.

3. After obstruction has been encountered, next full cycle shall be in search mode with door moving at creep speed.

F. Monitoring: Microprocessor software shall be designed to constantly monitor system operation. In event of door speed, motor function, or operations deviate from design criteria, automatic operation shall cease and door shall be held open.

2.10 CONTROL AND SENSING DEVICE

A. Provide monitoring system to control door opening, closing, and hold open function.

B. Type: Center mounted above on both sides of door header and providing:

1. Both motion and presence detection.

2. Obstruction sensing device.

C. Motion detection: Adjustable with maximum range of 84 inches wide and 60 inches in front of door.

D. Presence detection:

1. Range: 84 inches wide extending up 16 inches on either side of active door leaf.

2. Capable of detection motionless people and inanimate objects.

3. Energized and monitoring doorway at all times.

4. Automatic self adjusting to changes in floor conditions.

E. Operating range: -20 degree F to 125 degrees F.

F. System shall not be false implused by rain, snow, and frost.

PART 3 - EXECUTION

3.1 INSPECTION

A. Field verify size and conditions at opening prior to submittal of shop drawings and fabrication.

B. Inspect openings and verify that power supply, size of opening, and other existing conditions are sufficient to all allow proper installation of automatic sliding door. Correct detrimental and unsatisfactory conditions prior to beginning of installation.

3.2 INSTALLATION

A. Install in accordance with manufacturer's instructions and reviewed shop drawings.

B. Provide alignment attachments and shims required to fasten system to structure. Align assembly plumb and level, free of warp or twist. Maintain assembly dimensional tolerances, aligning with adjacent work. Use anchorage devices to securely attach frame assembly to structure.

3.3 ADJUSTMENT AND CLEANING

A. Adjust operator and controls for optimum condition and safety. Lubricate operating equipment.

B. Remove protective material from prefinished aluminum surfaces.

C. Wash exposed surfaces using a solution of mild detergent in warm water, applied with soft, clean cloths. Do not use abrasives. Take care to remove dirt from corners. Wipe surfaces clean.

3.4 TESTING AND DEMONSTRATION

A. After installation, test automatic sliding door. Test shall be witnessed by representative of Owner. Notify Owner 24 hours in advance of test.

B. Cycle door assembly through all required functions a minimum of three times. Verify speed, operation, control, signals to and monitoring.

1. Opening by activation of motion sensors.

2. Emergency breakaway.

3. Power failure functions.

4. Time delays.

5. Selective opening functions.

6. Obstruction sensing and reaction.

7. False impulses.

8. Other functions and operations that are part of installation.

C. Correct deficiencies and make necessary adjustments and modifications. Retest affected components and functions.

D. Recording: Prepare and submit test report as part of Project Record Documents in accordance with Section 01 77 00 - Closeout Procedures. Describe tests performed, test results, deficiencies and corrective measures.

3.5 DEMONSTRATIONS

A. In accordance with Section 01 79 00 - Demonstration and Training, demonstration operation and maintenance of automatic sliding door assembly to Owner's representatives. Schedule demonstration session with Owner. Allow a minimum of 2 hours for demonstration.

END OF SECTION

SECTION 08 71 00

DOOR HARDWARE

PART 1 - GENERAL

1.01 RELATED DOCUMENTS

A. Drawings and general provisions of the Contract, including General and Supplementary Conditions and Division 01 Specification Sections, apply to this Section.

1.02 SUMMARY

A. Section includes:

1. **Mechanical and electrified door hardware for:**

   a. Swinging doors.
   b. Sliding doors.
   c. Gates.

2. **Field verification, preparation and modification of existing doors and frames to receive new door hardware.**
3. **The intent of the hardware specification is to specify the hardware for interior and exterior doors, and to establish a type, continuity, and standard of quality. However, it is the door hardware supplier's responsibility to thoroughly review existing conditions, schedules, specifications, drawings, and other Contract Documents to verify the suitability of the hardware specified.**

B. Exclusions: Unless specifically listed in hardware sets, hardware is not specified in this section for:

1. **Windows**
2. **Cabinets (casework), including locks in cabinets**
3. **Signage**
4. **Toilet accessories**
5. **Overhead doors**

C. Related Sections:

1. **Division 01 Section "Alternates" for alternates affecting this section.**
2. **Division 07 Section "Joint Sealants" for sealant requirements applicable to threshold installation specified in this section.**
3. **Division 09 sections for touchup, finishing or refinishing of existing openings modified by this section.**
4. **Division 26 sections for connections to electrical power system and for low-voltage wiring.**
5. **Division 28 sections for coordination with other components of electronic access control system.**

1.03 REFERENCES

A. UL - Underwriters Laboratories

1. **UL 10B - Fire Test of Door Assemblies**
2. **UL 10C - Positive Pressure Test of Fire Door Assemblies**
3. **UL 1784 - Air Leakage Tests of Door Assemblies**
4. **UL 305 - Panic Hardware**

B. DHI - Door and Hardware Institute

1. **Sequence and Format for the Hardware Schedule**
2. **Recommended Locations for Builders Hardware**
3. **Key Systems and Nomenclature**

C. ANSI - American National Standards Institute

1. **ANSI/BHMA A156.1 - A156.29, and ANSI/BHMA A156.31 - Standards for Hardware and Specialties**

1.04 SUBMITTALS

A. General:

1. **Submit in accordance with Conditions of Contract and Division 01 requirements.**
2. **Highlight, encircle, or otherwise specifically identify on submittals deviations from Contract Documents, issues of incompatibility or other issues which may detrimentally affect the Work.**
3. **Prior to forwarding submittal, comply with procedures for verifying existing door and frame compatibility for new hardware, as specified in PART 3, "EXAMINATION" article, herein.**

B. Action Submittals:

1. **Product Data: Technical product data for each item of door hardware, installation instructions, maintenance of operating parts and finish, and other information necessary to show compliance with requirements.**
2. **Riser and Wiring Diagrams: After final approval of hardware schedule, submit details of electrified door hardware, indicating:**

   a. Wiring Diagrams: For power, signal, and control wiring and including:
      1) Details of interface of electrified door hardware and building safety and security systems.
      2) Schematic diagram of systems that interface with electrified door hardware.
      3) Point-to-point wiring.
      4) Risers.

3. **Door Hardware Schedule: Submit schedule with hardware sets in vertical format as illustrated by Sequence of Format for the Hardware Schedule as published by the Door and Hardware Institute. Indicate complete designations of each item required for each door or opening, include:**

   a. Door Index; include door number, heading number, and Architects hardware set number.
   b. Opening Lock Function Spreadsheet: List locking device and function for each opening.

c. Quantity, type, style, function, size, and finish of each hardware item.
d. Name and manufacturer of each item.
e. Fastenings and other pertinent information.
f. Location of each hardware set cross-referenced to indications on Drawings.
g. Explanation of all abbreviations, symbols, and codes contained in schedule.
h. Mounting locations for hardware.
i. Door and frame sizes and materials.
j. Name and phone number for local manufacturer's representative for each product.
k. Operational Description of openings with any electrified hardware (locks, exits, electromagnetic locks, electric strikes, automatic operators, door position switches, magnetic holders or closer/holder units, and access control components). Operational description should include operational descriptions for: egress, ingress (access), and fire/smoke alarm connections.
   1) Submittal Sequence: Submit door hardware schedule concurrent with submissions of Product Data, Samples, and Shop Drawings. Coordinate submission of door hardware schedule with scheduling requirements of other work to facilitate fabrication of other work that is critical in Project construction schedule.

4. **Key Schedule:**

   a. After Keying Conference, provide keying schedule listing levels of keying as well as explanation of key system's function, key symbols used and door numbers controlled.
   b. Use ANSI/BHMA A156.28 “Recommended Practices for Keying Systems” as guideline for nomenclature, definitions, and approach for selecting optimal keying system.
   c. Provide 3 copies of keying schedule for review prepared and detailed in accordance with referenced DHI publication. Include schematic keying diagram and index each key to unique door designations.
   d. Index keying schedule by door number, keyset, hardware heading number, cross keying instructions, and special key stamping instructions.
   e. Provide one complete bitting list of key cuts and one key system schematic illustrating system usage and expansion.
      1) Forward bitting list, key cuts and key system schematic directly to Owner, by means as directed by Owner.

   f. Prepare key schedule by or under supervision of supplier, detailing Owner’s final keying instructions for locks.

5. **Templates: After final approval of hardware schedule, provide templates for doors, frames and other work specified to be factory or shop prepared for door hardware installation.**

C. Closeout Submittals:

1. **Operations and Maintenance Data: Provide in accordance with Division 01 and include:**

   a. Complete information on care, maintenance, and adjustment; data on repair and replacement parts, and information on preservation of finishes.
   b. Catalog pages for each product.
   c. Factory order acknowledgement numbers (for warranty and service)
   d. Name, address, and phone number of local representative for each manufacturer.
   e. Parts list for each product.
   f. Final approved hardware schedule, edited to reflect conditions as-installed.
   g. Final keying schedule
   h. Copies of floor plans with keying nomenclature

i. As-installed wiring diagrams for each opening connected to power, both low voltage and 110 volts.
j. Copy of warranties including appropriate reference numbers for manufacturers to identify project.

1.05 QUALITY ASSURANCE

A. Supplier Qualifications and Responsibilities: Recognized architectural hardware supplier with record of successful in-service performance for supplying door hardware similar in quantity, type, and quality to that indicated for this Project and that provides certified Architectural Hardware Consultant (AHC) or Door Hardware Consultant (DHC) available to Owner, Architect, and Contractor, at reasonable times during the Work for consultation.

1. **Warehousing Facilities: In Project's vicinity.**
2. **Scheduling Responsibility: Preparation of door hardware and keying schedules.**
3. **Engineering Responsibility: Preparation of data for electrified door hardware, including Shop Drawings, based on testing and engineering analysis of manufacturer's standard units in assemblies similar to those indicated for this Project.**
4. **Coordination Responsibility: Assist in coordinating installation of electronic security hardware with Architect and electrical engineers and provide installation and technical data to Architect and other related subcontractors.**

a. Upon completion of electronic security hardware installation, inspect and verify that all components are working properly.

B. Architectural Hardware Consultant Qualifications: Person who is experienced in providing consulting services for door hardware installations that are comparable in material, design, and extent to that indicated for this Project and meets these requirements:

1. **For door hardware, DHI-certified, Architectural Hardware Consultant (AHC) or Door Hardware Consultant (DHC).**
2. **Can provide installation and technical data to Architect and other related subcontractors.**
3. **Can inspect and verify components are in working order upon completion of installation.**
4. **Capable of producing wiring diagrams.**
5. **Capable of coordinating installation of electrified hardware with Architect and electrical engineers.**

C. Single Source Responsibility: Obtain each type of door hardware from single manufacturer.

D. Fire-Rated Door Openings: Provide door hardware for fire-rated openings that complies with NFPA 80 and requirements of authorities having jurisdiction. Provide only items of door hardware that are listed products tested by Underwriters Laboratories, Intertek Testing Services, or other testing and inspecting organizations acceptable to authorities having jurisdiction for use on types and sizes of doors indicated, based on testing at positive pressure and according to NFPA 252 or UL 10C and in compliance with requirements of fire-rated door and door frame labels.

E. Electrified Door Hardware: Listed and labeled as defined in NFPA 70, Article 100, by testing agency acceptable to authorities having jurisdiction.

F. Accessibility Requirements: For door hardware on doors in an accessible route, comply with governing accessibility regulations cited in “REFERENCES” article, herein.

G. Keying Conference

1. **Incorporate keying conference decisions into final keying schedule after reviewing door hardware keying system including:**

   a. Function of building, flow of traffic, purpose of each area, degree of security required, and plans for future expansion.
   b. Preliminary key system schematic diagram.
   c. Requirements for key control system.
   d. Requirements for access control.
   e. Address for delivery of keys.

1.06 DELIVERY, STORAGE, AND HANDLING

A. Inventory door hardware on receipt and provide secure lock-up for hardware delivered to Project site.

B. Tag each item or package separately with identification coordinated with final door hardware schedule, and include installation instructions, templates, and necessary fasteners with each item or package.

   1. **Deliver each article of hardware in manufacturer's original packaging.**

C. Project Conditions:

   1. **Maintain manufacturer-recommended environmental conditions throughout storage and installation periods.**
   2. **Provide secure lock-up for door hardware delivered to Project. Control handling and installation of hardware items so that completion of Work will not be delayed by hardware losses both before and after installation.**

D. Protection and Damage:

   1. **Promptly replace products damaged during shipping.**
   2. **Handle hardware in manner to avoid damage, marring, or scratching. Correct, replace or repair products damaged during Work.**
   3. **Protect products against malfunction due to paint, solvent, cleanser, or any chemical agent.**

E. Deliver keys to Owner as directed by Owner.

1.07 COORDINATION

A. Installation Templates: Distribute for doors, frames, and other work specified to be factory or shop prepared. Check Shop Drawings of other work to confirm that adequate provisions are made for locating and installing door hardware to comply with indicated requirements.

B. Security: Coordinate installation of door hardware, keying, and access control with Owner's security consultant.

C. Electrical System Roughing-In: Coordinate layout and installation of electrified door hardware with connections to power supplies and building safety and security systems.

D. Existing Openings: Where existing doors, frames and/or hardware are to remain, field verify existing functions, conditions and preparations and coordinate to suit opening conditions and to provide proper door operation.

1.08 WARRANTY

A. Warranty: Manufacturer's standard form in which manufacturer agrees to repair or replace components of door hardware that fail in materials or workmanship within specified warranty period.

1. **Warranty Period: Beginning from date of Substantial Completion, for durations indicated.**

a. Closers:
1) Mechanical: 30 years.

b. Automatic Operators: 2 years.

c. Exit Devices:
1) Mechanical: 3 years.

d. Locksets:
1) Mechanical: 10 years.

2. **Warranty does not cover damage or faulty operation due to improper installation, improper use or abuse.**

1.09 MAINTENANCE

A. Maintenance Tools: Furnish complete set of special tools required for maintenance and adjustment of hardware, including changing of cylinders.

PART 2 - PRODUCTS

2.01 MANUFACTURERS

A. The Owner requires use of certain products for their unique characteristics and project suitability to insure continuity of existing and future performance and maintenance standards. After investigating available product offerings, the Awarding Authority has elected to prepare proprietary specifications. These products are specified with the notation: “No Substitute.”

1. **Where “No Substitute” is noted, submittals and substitution requests for other products will not be considered.**

B. Approval of manufacturers and/or products other than those listed as “Scheduled Manufacturer” or “Acceptable Manufacturers” in the individual article for the product category shall be in accordance with QUALITY ASSURANCE article, herein.

C. Approval of products from manufacturers indicated in “Acceptable Manufacturers” is contingent upon those products providing all functions and features and meeting all requirements of scheduled manufacturer’s product.

D. Where specified hardware is not adaptable to finished shape or size of members requiring hardware, furnish suitable types having same operation and quality as type specified, subject to Architect's approval.

2.02 MATERIALS

A. Fasteners

1. **Provide hardware manufactured to conform to published templates, generally prepared for machine screw installation.**
2. **Furnish screws for installation with each hardware item. Finish exposed (exposed under any condition) screws to match hardware finish, or, if exposed in surfaces of other work, to match finish of this other work including prepared for paint surfaces to receive painted finish.**
3. **Provide concealed fasteners for hardware units exposed when door is closed except when no standard units of type specified are available with concealed fasteners. Do not use thru-bolts for installation where bolt head or nut on opposite face is exposed in other work unless thru-bolts are required to fasten hardware securely. Review door specification and advise Architect if thru-bolts are required.**
4. **Install hardware with fasteners provided by hardware manufacturer.**

B. Modification and Preparation of Existing Doors: Where existing door hardware is indicated to be removed and reinstalled.

1. **Provide necessary fillers, Dutchmen, reinforcements, and fasteners, compatible with existing materials, as required for mounting new opening hardware and to cover existing door and frame preparations.**
2. **Use materials which match materials of adjacent modified areas.**
3. **When modifying existing fire-rated openings, provide materials permitted by NFPA 80 as required to maintain fire-rating.**

C. Provide screws, bolts, expansion shields, drop plates and other devices necessary for hardware installation.

1. **Where fasteners are exposed to view: Finish to match adjacent door hardware material.**

2.03 CONTINUOUS HINGES

A. Aluminum Geared

1. **Manufacturers:**

a. Scheduled Manufacturer: Ives **(IVE)**.
b. Acceptable Manufacturers: Select, Stanley.

2. **Requirements:**

a. Provide aluminum geared continuous hinges conforming to ANSI/BHMA A156.26, Grade 1.
b. Provide aluminum geared continuous hinges, where specified in the hardware sets, fabricated from 6063-T6 aluminum.
c. Provide split nylon bearings at each hinge knuckle for quiet, smooth, self-lubricating operation.

d. Provide hinges capable of supporting door weights up to 450 pounds, and successfully tested for 1,500,000 cycles.
e. On fire-rated doors, provide aluminum geared continuous hinges that are classified for use on rated doors by testing agency acceptable to authority having jurisdiction.
f. Provide aluminum geared continuous hinges with electrified option scheduled in the hardware sets. Provide with sufficient number and wire gage to accommodate electric function of specified hardware.
g. Install hinges with fasteners supplied by manufacturer.
h. Provide hinges 1 inch (25 mm) shorter in length than nominal height of door, unless otherwise noted or door details require shorter length and with symmetrical hole pattern.

2.04 ELECTRIC POWER TRANSFER

A. Manufacturers:

a. Scheduled Manufacturer: Von Duprin EPT-2/10 **(VON)**
b. Acceptable Manufacturers: ABH PT1000, Securitron CEPT-10.

B. Provide power transfer with electrified options as scheduled in the hardware sets. Provide with number and gage of wires sufficient to accommodate electric function of specified hardware.

C. Locate electric power transfer per manufacturer's template and UL requirements, unless interference with operation of door or other hardware items.

2.05 FLUSH BOLTS

A. Manufacturers:

1. **Scheduled Manufacturer: Ives (IVE).**
2. **Acceptable Manufacturers: Burns, Rockwood**

B. Requirements:

1. **Provide automatic, constant latching, and manual flush bolts with forged bronze or stainless steel face plates, extruded brass levers, and with wrought brass guides and strikes. Provide 12 inch (305 mm) steel or brass rods at doors up to 90 inches (2286 mm) in height. For doors over 90 inches (2286 mm) in height increase top rods by 6 inches (152 mm) for each additional 6 inches (152 mm) of door height. Provide dust-proof strikes at each bottom flush bolt.**

2.06 CYLINDRICAL LOCKS – GRADE 1

A. Manufacturers and Products:

1. **Scheduled Manufacturer and Product: Schlage ND series (SCH).**
   Acceptable Manufacturers and Products: Sargent 11-Line

B. Requirements:

1. **Provide cylindrical locks conforming to ANSI/BHMA A156.2 Series 4000, Grade 1, and UL Listed for 3 hour fire doors.**

2. **Cylinders: Refer to "KEYING" article, herein.**
3. **Provide locks with standard 2-3/4 inches (70 mm) backset, unless noted otherwise, with 1/2 inch latch throw. Provide proper latch throw for UL listing at pairs.**
4. **Provide locksets with separate anti-rotation thru-bolts, and no exposed screws.**
5. **Provide independently operating levers with two external return spring cassettes mounted under roses to prevent lever sag.**
6. **Provide standard ASA strikes unless extended lip strikes are necessary to protect trim.**
7. **Provide electrified options as scheduled in the hardware sets.**
8. **Lever Trim: Solid cast levers without plastic inserts and wrought roses on both sides.**

    a. Lever Design: Schlage Rhodes

2.07 EXIT DEVICES

A. Manufacturers and Products:

1. **Scheduled Manufacturer and Product: Von Duprin** 99 series (VON).
2. **Acceptable Manufacturers and Products: Sargent 19-43-GL-80 series, Precision Apex series.**

B. Requirements:

1. **Provide exit devices tested to ANSI/BHMA A156.3 Grade 1 and UL listed for Panic Exit or Fire Exit Hardware.**
2. **Cylinders: Refer to "KEYING" article, herein.**
3. **Provide touchpad type exit devices, fabricated of brass, bronze, stainless steel, or aluminum, plated to standard architectural finishes to match balance of door hardware.**
4. **Touchpad must extend a minimum of one half of door width. No plastic inserts are allowed in touchpads.**
5. **Provide exit devices with deadlatching feature for security and for future addition of alarm kits and/or other electrified requirements.**
6. **Provide flush end caps for exit devices.**
7. **Provide exit devices with manufacturer's approved strikes.**
8. **Provide exit devices cut to door width and height. Install exit devices at height recommended by exit device manufacturer, allowable by governing building codes, and approved by Architect.**
9. **Mount mechanism case flush on face of doors, or provide spacers to fill gaps behind devices. Where glass trim or molding projects off face of door, provide glass bead kits.**
10. **Provide cylinder or hex-key dogging as specified at non fire-rated openings.**
11. **OPTION: Provide dogging indicators (CDSI/HDSI) for visible indication of dogging status.**
12. **Removable Mullions: 2 inches (51 mm) x 3 inches (76 mm) steel tube. Where scheduled as keyed removable mullion, provide type that can be removed by use of a keyed cylinder, which is self-locking when re-installed.**
13. **Provide factory drilled weep holes for exit devices used in full exterior application, highly corrosive areas, and where noted in hardware sets.**
14. **Provide electrified options as scheduled.**
15. **Top latch mounting: double or single tab mount for steel doors, face mount for aluminum doors eliminating requirement of tabs, and double tab mount for wood doors.**

16. **Provide exit devices with optional trim designs to match other lever and pull designs used on the project.**

2.08 POWER SUPPLIES

A. Manufacturers and Products:

1. **Scheduled Manufacturer and Product: Schlage or Von Duprin PS900 series (SCE).**
2. **Acceptable Manufacturers and Products: Precision ELR series, Sargent 3500 series, Dynalock 5000 series, Securitron BPS series, Security Door Controls 600 series**

B. Requirements:

1. **Provide power supplies, recommended and approved by manufacturer of electrified locking component, for operation of electrified locks, electrified exit devices, magnetic locks, electric strikes, and other components requiring power supply.**
2. **Provide appropriate quantity of power supplies necessary for proper operation of electrified locking components as recommended by manufacturer of electrified locking components with consideration for each electrified component using power supply, location of power supply, and approved wiring diagrams. Locate power supplies as directed by Architect.**
3. **Provide regulated and filtered 24 VDC power supply , and UL class 2 listed.**
4. **Options:**

   a. Provide power supply, where specified, with internal capability of charging sealed backup batteries 24 VDC, in addition to operating DC load.
   b. Provide sealed batteries for battery back-up at each power supply where specified.
   c. Provide keyed power supply cabinet.

5. **Provide power supply in an enclosure, complete, and requiring 120VAC to fused input.**
6. **Provide power supply with emergency release terminals, where specified, that allow release of all devices upon activation of fire alarm system complete with fire alarm input for initiating “no delay” exiting mode.**

2.09 CYLINDERS

A. Manufacturers:

1. **Scheduled Manufacturer: Schlage - (SCH).**

B. Requirements:

1. **Provide cylinders/cores, from the same manufacturer of locksets, compliant with ANSI/BHMA A156.5; latest revision, Section 12, Grade 1; permanent cylinders; cylinder face finished to match lockset, manufacturer’s series as indicated. Refer to “KEYING” article, herein.**

C. Construction Keying:

1. **Replaceable Construction Cylinders.**

a. Provide temporary construction cylinders replaceable by permanent cylinder, furnished 1-Bit or keyed-alike with the following requirements.
   1) 12 construction change (day) keys.

b. Material Supplier along with Owner's Representative will replace temporary construction cylinders with permanent cylinders.

2.10 KEYING

A. Comply with guidelines in ANSI/BHMA A156.28, incorporating decisions made at keying conference.

B. Requirements:

1. **Provide permanent cylinders/cores keyed by the manufacturer according to the following key system.**

   a. Master Keying system as directed by the Owner.

2. **Forward bitting list and keys separately from cylinders, by means as directed by Owner. Failure to comply with forwarding requirements will be cause for replacement of cylinders/cores involved at no additional cost to Owner.**
3. **Provide keys with the following features:**

   a. Material: Nickel silver; minimum thickness of .107-inch (2.3mm)

4. **Identification:**

   a. Mark permanent cylinders/cores and keys with applicable blind code per DHI publication "Keying Systems and Nomenclature" for identification. Do not provide blind code marks with actual key cuts.
   b. Identification stamping provisions must be approved by the Architect and Owner.
   c. Stamp cylinders/cores and keys with Owner's unique key system facility code as established by the manufacturer; key symbol and embossed or stamped with "DO NOT DUPLICATE" along with the "PATENTED" or patent number to enforce the patent protection.
   d. Failure to comply with stamping requirements will be cause for replacement of keys involved at no additional cost to Owner.
   e. Forward permanent cylinders/cores to Owner, separately from keys, by means as directed by Owner.

5. **Quantity: Furnish in the following quantities.**

   a. Change (Day) Keys: 3 per cylinder/core.
   b. Permanent Control Keys: 3.
   c. Master Keys: 6.

2.11 DOOR CLOSERS

A. Manufacturers and Products:

1. **Scheduled Manufacturer and Product: LCN 4010/4110/4020 series (LCN).**
2. **Acceptable Manufacturers and Products: Sargent 281/281P10/281TJ series factory assembled (without PRV)**

B. Requirements:

1. **Provide door closers conforming to ANSI/BHMA A156.4 Grade 1 requirements by BHMA certified independent testing laboratory. Certify surface mounted mechanical closers to meet fifteen million (15,000,000) full load cycles. ISO 9000 certify closers. Stamp units with date of manufacture code.**
2. **Provide door closers with fully hydraulic, full rack and pinion action with high strength cast iron cylinder, and full complement bearings at shaft.**
3. **Cylinder Body: 1-1/2 inch (38 mm) diameter with 11/16 inch (17 mm) diameter double heat-treated pinion journal.**
4. **Hydraulic Fluid: Fireproof, passing requirements of UL10C, and requiring no seasonal closer adjustment for temperatures ranging from 120 degrees F to -30 degrees F.**
5. **Spring Power: Continuously adjustable over full range of closer sizes, and providing reduced opening force as required by accessibility codes and standards.**
6. **Hydraulic Regulation: By tamper-proof, non-critical valves, with separate adjustment for latch speed, general speed, and backcheck.**
7. **Provide closers with solid forged steel main arms and factory assembled heavy-duty forged forearms for parallel arm closers. When closers are parallel arm mounted, provide closers which mount within 6-inch (152 mm) top rail without use of mounting plate so that closer is not visible through vision panel from pull side.**
8. **Pressure Relief Valve (PRV) Technology: Not permitted.**
9. **Finish for Closer Cylinders, Arms, Adapter Plates, and Metal Covers: Powder coating finish which has been certified to exceed 100 hours salt spray testing as described in ANSI/BHMA Standard A156.4 and ASTM B117, or has special rust inhibitor (SRI).**
10. **Provide special templates, drop plates, mounting brackets, or adapters for arms as required for details, overhead stops, and other door hardware items interfering with closer mounting.**

2.12 ELECTRO-MECHANICAL AUTOMATIC OPERATORS

A. Manufacturers and Products:

1. **Scheduled Manufacturer and Product: LCN Senior Swing (LCN).**
2. **Acceptable Manufacturers and Products: Besam Swingmaster MP.**

B. Requirements:

1. **Provide low energy automatic operator units that are electro-mechanical design complying with ANSI/BHMA A156.19.**

   a. Opening: Powered by DC motor working through reduction gears.
   b. Closing: Spring force.
   c. Manual, hydraulic, or chain drive closers: Not permitted.
   d. Operation: Motor is off when door is in closing mode. Door can be manually operated with power on or off without damage to operator. Provide variable adjustments, including opening and closing speed adjustment.
   e. Cover: Aluminum.

2. **Provide units with manual off/auto/hold-open switch, push and go function to activate power operator, vestibule interface delay, electric lock delay, hold-open delay adjustable from 2 to 30 seconds, and logic terminal to interface with accessories, mats, and sensors.**
3. **Provide drop plates, brackets, or adapters for arms as required to suit details.**

4. **Provide hard-wired motion sensors and/or actuator switches for operation as specified. Provide weather-resistant actuators at exterior applications.**
5. **Provide key switches, with LED's, recommended and approved by manufacturer of automatic operator as required for function as described in operation description of hardware sets. Cylinders: Refer to "KEYING" article, herein.**
6. **Provide complete assemblies of controls, switches, power supplies, relays, and parts/material recommended and approved by manufacturer of automatic operator for each individual leaf. Actuators control both doors simultaneously at pairs. Sequence operation of exterior and vestibule doors with automatic operators to allow ingress or egress through both sets of openings as directed by Architect. Locate actuators, key switches, and other controls as directed by Architect.**
7. **Provide units with inputs for smoke evacuation doors, where specified, which allow doors to power open upon fire alarm activation and hold open indefinitely or until fire alarm is reset, presence detector input, which prevents closed door from opening or door that is fully opened from closing, hold open toggle input, which allows remote activation for indefinite hold open and close second time input is activated, vestibule inputs, which allow sequencing operation of two units, and SPDT relay for interfacing with latching or locking devices.**

2.13 DOOR TRIM

A. Manufacturers:

1. **Scheduled Manufacturer: Ives (IVE).**
2. **Acceptable Manufacturers: Burns, Rockwood.**

B. Requirements:

1. **Provide push plates 4 inches (102 mm) wide by 16 inches (406 mm) high by 0.050 inch (1 mm) thick and beveled 4 edges. Where width of door stile prevents use of 4 inches (102 mm) wide plate, adjust width to fit.**
2. **Provide push bars of solid bar stock, diameter and length as scheduled. Provide push bars of sufficient length to span from center to center of each stile. Where required, mount back to back with pull.**
3. **Provide offset pulls of solid bar stock, diameter and length as scheduled. Where required, mount back to back with push bar.**
4. **Provide flush pulls as scheduled. Where required, provide back-to-back mounted model.**
5. **Provide pulls of solid bar stock, diameter and length as scheduled. Where required, mount back to back with push bar.**
6. **Provide pull plates 4 inches (102 mm) wide by 16 inches (406 mm) high by 0.050 inch (1 mm) thick, beveled 4 edges, and prepped for pull. Where width of door stile prevents use of 4 inches (102 mm) wide plate, adjust width to fit.**
7. **Provide wire pulls of solid bar stock, diameter and length as scheduled.**
8. **Provide decorative pulls as scheduled. Where required, mount back to back with pull.**

2.14 PROTECTION PLATES

A. Manufacturers:

1. **Scheduled Manufacturer: Ives (IVE).**
2. **Acceptable Manufacturers: Burns, Rockwood.**

B. Requirements:

1. **Provide kick plates, mop plates, and armor plates minimum of 0.050 inch (1 mm) thick, beveled four edges as scheduled. Furnish with sheet metal or wood screws, finished to match plates.**
2. **Sizes of plates:**

   a. Kick Plates: 10 inches (254 mm) high by 2 inches (51 mm) less width of door on single doors, 1 inch (25 mm) less width of door on pairs
   b. Mop Plates: 4 inches (102 mm) high by 2 inches (51 mm) less width of door on single doors, 1 inch (25 mm) less width of door on pairs
   c. Armor Plates: 36 inches (914 mm) high by 2 inches (51 mm) less width of door on single doors, 1 inch (25 mm) less width of door on pairs

2.15 OVERHEAD STOPS AND OVERHEAD STOP/HOLDERS

A. Manufacturers:

1. **Scheduled Manufacturers: Glynn-Johnson (GLY).**
2. **Acceptable Manufacturers: Rixson, Sargent.**

B. Requirements:

1. **Provide heavy duty concealed mounted overhead stop or holder as specified for exterior and interior vestibule single acting doors.**
2. **Provide heavy duty concealed mounted overhead stop or holder as specified for double acting doors.**
3. **Provide heavy or medium duty and concealed or surface mounted overhead stop or holder for interior doors as specified. Provide medium duty surface mounted overhead stop for interior doors and at any door that swings more than 140 degrees before striking wall, open against equipment, casework, sidelights, and where conditions do not allow wall stop or floor stop presents tripping hazard.**
4. **Where overhead holders are specified provide friction type at doors without closer and positive type at doors with closer.**

2.16 DOOR STOPS AND HOLDERS

A. Manufacturers:

1. **Scheduled Manufacturer: Ives (IVE).**
2. **Acceptable Manufacturers: Burns, Rockwood.**

B. Provide door stops at each door leaf:

1. **Provide wall stops wherever possible. Provide convex type where mortise type locks are used and concave type where cylindrical type locks are used.**
2. **Where a wall stop cannot be used, provide universal floor stops for low or high rise options.**
3. **Where wall or floor stop cannot be used, provide medium duty surface mounted overhead stop.**

2.17 THRESHOLDS, SEALS, DOOR SWEEPS, AUTOMATIC DOOR BOTTOMS, AND GASKETING

A. Manufacturers:

1. **Scheduled Manufacturer: Zero International (ZER).**
2. **Acceptable Manufacturers: National Guard, Reese.**

B. Requirements:

1. **Provide thresholds, weather-stripping (including door sweeps, seals, and astragals) and gasketing systems (including smoke, sound, and light) as specified and per architectural details. Match finish of other items.**
2. **Smoke- and Draft-Control Door Assemblies: Where smoke- and draft-control door assemblies are required, provide door hardware that meets requirements of assemblies tested according to UL 1784 and installed in compliance with NFPA 105.**
3. **Size of thresholds:**

   a. Saddle Thresholds: 1/2 inch (13 mm) high by jamb width by door width
   b. Bumper Seal Thresholds: 1/2 inch (13 mm) high by 5 inches (127 mm) wide by door width

4. **Provide door sweeps, seals, astragals, and auto door bottoms only of type where resilient or flexible seal strip is easily replaceable and readily available.**

2.18 SILENCERS

A. Manufacturers:

1. **Scheduled Manufacturer: Ives (IVE).**
2. **Acceptable Manufacturers: Burns, Rockwood.**

B. Requirements:

1. **Provide "push-in" type silencers for hollow metal or wood frames.**
2. **Provide one silencer per 30 inches (762 mm) of height on each single frame, and two for each pair frame.**
3. **Omit where gasketing is specified.**

2.19 DOOR POSITION SWITCHES

A. Manufacturers:

1. **Scheduled Manufacturer: Schlage (SCE).**
2. **Acceptable Manufacturers: GE-Interlogix, Sargent**

B. Requirements:

1. **Provide recessed or surface mounted type door position switches as specified.**
2. **Coordinate door and frame preparations with door and frame suppliers. If switches are being used with magnetic locking device, provide minimum of 4 inches (102 mm) between switch and magnetic locking device.**

2.20 FINISHES

A. Finish: BHMA 626/652 (US26D); except:

1. **Continuous Hinges: BHMA 628 (US28)**
2. **Push Plates, Pulls, and Push Bars: BHMA 630 (US32D)**
3. **Protection Plates: BHMA 630 (US32D)**
4. **Overhead Stops and Holders: BHMA 630 (US32D)**
5. **Door Closers: Powder Coat to Match**
6. **Wall Stops: BHMA 630 (US32D)**
7. **Latch Protectors: BHMA 630 (US32D)**
8. **Weatherstripping: Clear Anodized Aluminum**
9. **Thresholds: Mill Finish Aluminum**

PART 3 - EXECUTION

3.01 EXAMINATION

A. Prior to installation of hardware, examine doors and frames, with Installer present, for compliance with requirements for installation tolerances, labeled fire-rated door assembly construction, wall and floor construction, and other conditions affecting performance.

B. Field verify existing doors and frames receiving new hardware and existing conditions receiving new openings. Verify that new hardware is compatible with existing door and frame preparation and existing conditions.

C. Examine roughing-in for electrical power systems to verify actual locations of wiring connections before electrified door hardware installation.

D. Proceed with installation only after unsatisfactory conditions have been corrected.

3.02 PREPARATION

A. Where on-site modification of doors and frames is required:

1. **Carefully remove existing door hardware and components being reused. Clean, protect, tag, and store in accordance with storage and handling requirements specified herein.**
2. **Field modify and prepare existing door and frame for new hardware being installed.**
3. **When modifications are exposed to view, use concealed fasteners, when possible.**
4. **Prepare hardware locations and reinstall in accordance with installation requirements for new door hardware and with:**

   a. Steel Doors and Frames: For surface applied door hardware, drill and tap doors and frames according to ANSI/SDI A250.6.
   b. Wood Doors: DHI WDHS.5 "Recommended Hardware Reinforcement Locations for Mineral Core Wood Flush Doors."
   c. Doors in rated assemblies: NFPA 80 for restrictions on on-site door hardware preparation.

3.03 INSTALLATION

A. Mount door hardware units at heights to comply with the following, unless otherwise indicated or required to comply with governing regulations.

1. **Standard Steel Doors and Frames: ANSI/SDI A250.8.**
2. **Custom Steel Doors and Frames: HMMA 831.**
3. **Wood Doors: DHI WDHS.3, "Recommended Locations for Architectural Hardware for Wood Flush Doors."**

B. Install each hardware item in compliance with manufacturer's instructions and recommendations, using only fasteners provided by manufacturer.

C. Do not install surface mounted items until finishes have been completed on substrate. Protect all installed hardware during painting.

D. Set units level, plumb and true to line and location. Adjust and reinforce attachment substrate as necessary for proper installation and operation.

E. Drill and countersink units that are not factory prepared for anchorage fasteners. Space fasteners and anchors according to industry standards.

F. Install operating parts so they move freely and smoothly without binding, sticking, or excessive clearance.

G. Hinges: Install types and in quantities indicated in door hardware schedule but not fewer than quantity recommended by manufacturer for application indicated or one hinge for every 30 inches (750 mm) of door height, whichever is more stringent, unless other equivalent means of support for door, such as spring hinges or pivots, are provided.

H. Lock Cylinders: Install construction cores to secure building and areas during construction period.

1. **Replace construction cores with permanent cores as indicated in keying section.**

I. Wiring: Coordinate with Division 26, ELECTRICAL sections for:

1. **Conduit, junction boxes and wire pulls.**
2. **Connections to and from power supplies to electrified hardware.**
3. **Connections to fire/smoke alarm system and smoke evacuation system.**
4. **Connection of wire to door position switches and wire runs to central room or area, as directed by Architect.**
5. **Testing and labeling wires with Architect's opening number.**

J. Door Closers: Mount closers on room side of corridor doors, inside of exterior doors, and stair side of stairway doors from corridors. Mount closers so they are not visible in corridors, lobbies and other public spaces unless approved by Architect.

K. Power Supplies: Locate power supplies as indicated or, if not indicated, above accessible ceilings or in equipment room, or alternate location as directed by Architect.

1. **Configuration: Provide least number of power supplies required to adequately serve doors with electrified door hardware.**

L. Thresholds: Set thresholds in full bed of sealant complying with requirements specified in Division 07 Section "Joint Sealants."

M. Stops: Provide floor stops for doors unless wall or other type stops are indicated in door hardware schedule. Do not mount floor stops where they may impede traffic or present tripping hazard.

N. Perimeter Gasketing: Apply to head and jamb, forming seal between door and frame.

O. Meeting Stile Gasketing: Fasten to meeting stiles, forming seal when doors are closed.

P. Door Bottoms: Apply to bottom of door, forming seal with threshold when door is closed.

3.04 FIELD QUALITY CONTROL

A. Engage qualified manufacturers trained representative to perform inspections and to prepare inspection reports.

1. **Representative will inspect door hardware and state in each report whether installed work complies with or deviates from requirements, including whether door hardware is properly installed and adjusted.**

3.05 ADJUSTING

A. Initial Adjustment: Adjust and check each operating item of door hardware and each door to ensure proper operation or function of every unit. Replace units that cannot be adjusted to operate as intended. Adjust door control devices to compensate for final operation of heating and ventilating equipment and to comply with referenced accessibility requirements.

1. **Door Closers: Adjust sweep period to comply with accessibility requirements and requirements of authorities having jurisdiction.**

3.06 CLEANING AND PROTECTION

A. Clean adjacent surfaces soiled by door hardware installation.

B. Clean operating items as necessary to restore proper function and finish.

C. Provide final protection and maintain conditions that ensure door hardware is without damage or deterioration at time of Substantial Completion.

3.07 DOOR HARDWARE SCHEDULE

A. Hardware items are referenced in the following hardware. Refer to the above-specifications for special features, options, cylinders/keying, and other requirements.

B. Hardware Sets:

✓ = Hardware Item Requiring Electrical Coordination

BASE BID

HARDWARE SET: 01

DOOR NUMBER:
100.1 118.1

EACH TO HAVE:

3	EA	HINGE	5BB1 4.5 X 4.5 NRP	652	IVE
1	EA	STOREROOM LOCK	ND96P6D RHO	626	SCH
1	EA	LOCK GUARD	LG13	630	IVE
1	EA	SURFACE CLOSER	4111 STD SCUSH	689	LCN
1	EA	KICK PLATE	8400 10" X 2" LDW B-CS	630	IVE
1	EA	RAIN DRIP	142A X D.W. +4"	AA	ZER
1	SET	SEALS	8303AA X D.S.	AA	ZER
1	EA	DOOR SWEEP	39A X D.W.	A	ZER
1	EA	THRESHOLD	8655A X D.W.	A	ZER

HARDWARE SET: 02

DOOR NUMBER:
101.1

EACH TO HAVE:

3	EA	HINGE	5BB1 4.5 X 4.5 NRP	652	IVE
1	EA	PANIC HARDWARE	99-NL	626	VON
1	EA	RIM CYLINDER	20-057	626	SCH
1	EA	SURFACE CLOSER	4111 STD SCUSH	689	LCN
1	EA	KICK PLATE	8400 10" X 2" LDW B-CS	630	IVE
1	EA	RAIN DRIP	142A X D.W. +4"	AA	ZER
1	SET	SEALS	8303AA X D.S.	AA	ZER
1	EA	DOOR SWEEP	39A X D.W.	A	ZER
1	EA	THRESHOLD	8655A X D.W.	A	ZER

HARDWARE SET: 03

DOOR NUMBER:
102.1

EACH TO HAVE:

3	EA	HINGE	5BB1 4.5 X 4.5	652	IVE
1	EA	PRIVACY W/COIN TURN	L9044 06A L583-363 L283-722 OCC/VAC	626	SCH
1	EA	SURFACE CLOSER	4011 STD	689	LCN
1	EA	KICK PLATE	8400 10" X 2" LDW B-CS	630	IVE
1	EA	WALL STOP	WS406/407CVX	630	IVE
3	EA	SILENCER	SR64	GRY	IVE

HARDWARE SET: 04

DOOR NUMBER:
103.1 117.3

EACH TO HAVE:

3	EA	HINGE	5BB1 4.5 X 4.5 NRP	652	IVE
1	EA	STOREROOM LOCK	ND80P6D RHO	626	SCH
1	EA	OH STOP	90S	630	GLY
3	EA	SILENCER	SR64	GRY	IVE

HARDWARE SET: 05

DOOR NUMBER:
104.1

EACH TO HAVE:

6	EA	HINGE	5BB1HW 4.5 X 4.5 NRP	652	IVE
1	EA	REMOVABLE MULLION	KR4954 STAB	689	VON
1	EA	PANIC HARDWARE	99-DT	626	VON
1	EA	PANIC HARDWARE	99-NL	626	VON
1	EA	RIM CYLINDER	20-057	626	SCH
1	EA	MORTISE CYLINDER	20-061	626	SCH
2	EA	SURFACE CLOSER	4111 STD SCUSH	689	LCN
1	EA	RAIN DRIP	142A X D.W. +4"	AA	ZER
1	SET	SEALS	8303AA X D.S.	AA	ZER
1	EA	MULLION SEAL	8780N X D.H.	BK	ZER
2	EA	DOOR SWEEP	39A X D.W.	A	ZER
1	EA	THRESHOLD	8655A X D.W.	A	ZER

EXIT ONLY

HARDWARE SET: 06

DOOR NUMBER:
105.1

EACH TO HAVE:

3	EA	HINGE	5BB1HW 5 X 4.5	652	IVE
1	EA	CLASSROOM LOCK	ND70P6D RHO	626	SCH
1	EA	OH STOP	90S	630	GLY
1	EA	SURFACE CLOSER	4011 STD	689	LCN
1	EA	KICK PLATE	8400 10" X 2" LDW B-CS	630	IVE
3	EA	SILENCER	SR64	GRY	IVE

HARDWARE SET: 07

DOOR NUMBER:
105.2 105.3 105.4

EACH TO HAVE:

ALL HARDWARE BY DOOR MANUFACTURER

HARDWARE SET: 08

DOOR NUMBER:
105.5

EACH TO HAVE:

3	EA	HINGE	5BB1 4.5 X 4.5 NRP	652	IVE
1	EA	ENTRANCE LOCK	ND92P6D RHO	626	SCH
1	EA	LOCK GUARD	LG13	630	IVE
1	EA	SURFACE CLOSER	4111 STD SHCUSH	689	LCN
1	EA	KICK PLATE	8400 10" X 2" LDW B-CS	630	IVE
1	EA	RAIN DRIP	142A X D.W. +4"	AA	ZER
1	SET	SEALS	8303AA X D.S.	AA	ZER
1	EA	DOOR SWEEP	39A X D.W.	A	ZER
1	EA	THRESHOLD	8655A X D.W.	A	ZER

HARDWARE SET: 09

DOOR NUMBER:
107.1

EACH TO HAVE:

1	EA	CONT. HINGE	112HD		628	IVE
1	EA	CONT. HINGE	112HD EPT		628	IVE
1	EA	POWER TRANSFER	EPT10	✓	689	VON
1	EA	REMOVABLE MULLION	KR4954-STAB-ANGLE PLATE		689	VON
1	EA	PANIC HARDWARE	99-EO		626	VON
1	EA	ELEC PANIC HARDWARE	LX-QEL-99-NL-OP-110MD 24 VDC	✓	626	VON
2	EA	OFFSET PULL	8190HD-10"		630	IVE
2	EA	OH STOP	100S		630	GLY
1	EA	SURFACE CLOSER	4021 STD		689	LCN
1	EA	SURF. AUTO OPERATOR	9542 MS AS REQ (120/240V AC)	✓	ANCLR	LCN
1	EA	MOUNTING PLATE	4020-18G		689	LCN
1	EA	ROCKER SWITCH	8310-806R	✓	689	LCN
2	EA	ACTUATOR	8310-856 OR 8310-818 AS REQ'D	✓	630	LCN
1	EA	MOUNTING PLATE	9540-18		689	LCN
1	EA	MULLION SEAL	8780N X D.H.		BK	ZER
2	EA	DOOR SWEEP	39A X D.W.		A	ZER
1	EA	THRESHOLD	8655A X D.W.		A	ZER
1	EA	CARD READER	BY ACCESS CONTROL INTEGRATOR	✓		
2	EA	DOOR CONTACT	679-05 WD OR HM AS REQ'D	✓	BLK	SCE
1	EA	RX MOTION SENSOR	BY ACCESS CONTROL INTEGRATOR	✓		
1	EA	POWER SUPPLY	PS902 BBK 900-2RS	✓	LGR	SCE
1	SET	SEALS	BY ALUM DOOR/FRAME MFG			
1	EA	WIRING DIAGRAM	POINT TO POINT / RISER	✓		

DOORS NORMALLY CLOSED AND LOCKED.
ENTRY BY VALID CREDENTIAL AT CARD READER OR BY KEY AT RIM CYLINDER.
RX MOTION SENSOR SHUNTS DOOR FORCED OPEN ALARM IN ACCESS CONTROL SYSTEM.
FREE EGRESS AT ALL TIMES.

NOTE: THE EXTERIOR WALL ACTUATOR SHALL BE WIRED IN SERIES WITH THE "LX" SWITCH IN THE PANIC DEVICE - SUCH THAT WHEN THE PANIC DEVICE IS UNLOCKED BY THE CARD READER ON THE EXTERIOR, THE EXTERIOR WALL ACTUATOR IS ACTIVE, AND THE OPERATOR WILL OPEN THE DOOR WHEN THE WALL ACTUATOR IS PUSHED. THE INTERIOR WALL ACTUATOR SHALL BE WIRED TO WHERE WHEN PUSHED THE “QEL” ON THE PANIC DEVICE WILL RETRACT AND THE OPERATOR WILL OPEN THE DOOR.

HARDWARE SET: 10

DOOR NUMBER:
109.1

EACH TO HAVE:

2	EA	CONT. HINGE	112HD		628	IVE
2	EA	PUSH/PULL BAR	9190HD-10"		630	IVE
2	EA	OH STOP	100S		630	GLY
1	EA	SURFACE CLOSER	4021 STD		689	LCN
1	EA	SURF. AUTO OPERATOR	9542 MS AS REQ (120/240V AC)	✓	ANCLR	LCN
1	EA	MOUNTING PLATE	4020-18G		689	LCN
1	EA	ROCKER SWITCH	8310-806R	✓	689	LCN
2	EA	ACTUATOR	8310-856 OR 8310-818 AS REQ'D	✓	630	LCN
1	EA	MOUNTING PLATE	9540-18		689	LCN
1	SET	SEALS	BY ALUM DOOR/FRAME MFG			
1	EA	WIRING DIAGRAM	POINT TO POINT / RISER	✓		

HARDWARE SET: 11

DOOR NUMBER:
109.2

EACH TO HAVE:

1	EA	CONT. HINGE	112HD		628	IVE
1	EA	CONT. HINGE	112HD EPT		628	IVE
1	EA	POWER TRANSFER	EPT10	✓	689	VON
1	EA	REMOVABLE MULLION	KR4954-STAB-ANGLE PLATE		689	VON
1	EA	PANIC HARDWARE	99-EO		626	VON
1	EA	ELEC PANIC HARDWARE	QEL-99-NL-OP-110MD 24 VDC	✓	626	VON
2	EA	OFFSET PULL	8190HD-10"		630	IVE
2	EA	OH STOP	100S		630	GLY
2	EA	SURFACE CLOSER	4021 STD		689	LCN
2	EA	MOUNTING PLATE	4020-18G		689	LCN
1	EA	MULLION SEAL	8780N X D.H.		BK	ZER
2	EA	DOOR SWEEP	39A X D.W.		A	ZER
1	EA	THRESHOLD	8655A X D.W.		A	ZER
1	EA	CARD READER	BY ACCESS CONTROL INTEGRATOR	✓		
2	EA	DOOR CONTACT	679-05 WD OR HM AS REQ'D	✓	BLK	SCE
1	EA	RX MOTION SENSOR	BY ACCESS CONTROL INTEGRATOR	✓		
1	EA	POWER SUPPLY	PS902 BBK 900-2RS	✓	LGR	SCE
1	SET	SEALS	BY ALUM DOOR/FRAME MFG			
1	EA	WIRING DIAGRAM	POINT TO POINT / RISER	✓		

DOORS NORMALLY CLOSED AND LOCKED.
ENTRY BY VALID CREDENTIAL AT CARD READER OR BY KEY AT RIM CYLINDER.
RX MOTION SENSOR SHUNTS DOOR FORCED OPEN ALARM IN ACCESS CONTROL SYSTEM.
FREE EGRESS AT ALL TIMES.

HARDWARE SET: 12

DOOR NUMBER:
110.1

EACH TO HAVE:

3	EA	HINGE	5BB1 4.5 X 4.5	652	IVE
1	EA	ENTRANCE LOCK	ND53P6D RHO	626	SCH
1	EA	WALL STOP	WS406/407CCV	630	IVE
3	EA	SILENCER	SR64	GRY	IVE

HARDWARE SET: 13

DOOR NUMBER:
111.1

EACH TO HAVE:

1	EA	CONT. HINGE	112HD		628	IVE
1	EA	ENTRANCE LOCK	ND53P6D RHO		626	SCH
1	EA	WALL STOP	WS406/407CCV		630	IVE
1	SET	SEALS	BY ALUM DOOR/FRAME MFG			

HARDWARE SET: 14

DOOR NUMBER:
112.1

EACH TO HAVE:

1	EA	CONT. HINGE	112HD		628	IVE
1	EA	CLASSROOM LOCK	ND70P6D RHO		626	SCH
1	EA	WALL STOP	WS406/407CVX		630	IVE
1	SET	SEALS	BY ALUM DOOR/FRAME MFG			

HARDWARE SET: 15

DOOR NUMBER:
113.1 114.1

EACH TO HAVE:

3	EA	HINGE	5BB1HW 4.5 X 4.5		652	IVE
1	EA	PUSH PLATE	8200 4" X 16"		630	IVE
1	EA	PULL PLATE	8302 6" 4" X 16"		630	IVE
1	EA	SURF. AUTO OPERATOR	9531 MS AS REQ (120/240 VAC)	✓	ANCLR	LCN
1	EA	ROCKER SWITCH	8310-806R	✓	689	LCN
2	EA	ACTUATOR	8310-856 OR 8310-818 AS REQ'D	✓	630	LCN
1	EA	MOUNTING PLATE	9530-18		689	LCN
1	EA	KICK PLATE	8400 10" X 2" LDW B-CS		630	IVE
1	EA	WALL STOP	WS406/407CVX		630	IVE
3	EA	SILENCER	SR64		GRY	IVE
1	EA	WIRING DIAGRAM	POINT TO POINT / RISER	✓		

HARDWARE SET: 16

DOOR NUMBER:
115.1

EACH TO HAVE:

2	EA	CONT. HINGE	112HD	628	IVE
1	EA	REMOVABLE MULLION	KR4954-STAB-ANGLE PLATE	689	VON
1	EA	PANIC HARDWARE	99-EO	626	VON
1	EA	PANIC HARDWARE	99-NL-OP-110MD	626	VON
1	EA	RIM CYLINDER	20-057	626	SCH
1	EA	MORTISE CYLINDER	20-061	626	SCH
2	EA	OFFSET PULL	8190HD-10"	630	IVE
2	EA	OH STOP	100S	630	GLY
2	EA	SURFACE CLOSER	4021 STD	689	LCN
2	EA	MOUNTING PLATE	4020-18G	689	LCN
1	EA	MULLION SEAL	8780N X D.H.	BK	ZER
2	EA	DOOR SWEEP	39A X D.W.	A	ZER
1	EA	THRESHOLD	8655A X D.W.	A	ZER
1	SET	SEALS	BY ALUM DOOR/FRAME MFG		

HARDWARE SET: 17

DOOR NUMBER:
116.1 117.1

EACH TO HAVE:

1	EA	CONT. HINGE	112HD	628	IVE
1	EA	CLASSROOM LOCK	ND94P6D RHO	626	SCH
1	EA	OH STOP	100S	630	GLY
1	EA	SURFACE CLOSER	4011 STD	689	LCN
1	EA	DOOR SWEEP	39A X D.W.	A	ZER
1	EA	THRESHOLD	8655A X D.W.	A	ZER
1	SET	SEALS	BY ALUM DOOR/FRAME MFG		

HARDWARE SET: 18

DOOR NUMBER:
116.2 117.2

EACH TO HAVE:

3	EA	HINGE	5BB1 4.5 X 4.5 NRP	652	IVE
1	EA	CLASSROOM LOCK	ND70P6D RHO	626	SCH
1	EA	SURFACE CLOSER	4111 STD EDA	689	LCN
1	EA	KICK PLATE	8400 10" X 2" LDW B-CS	630	IVE
1	EA	WALL STOP	WS406/407CVX	630	IVE
3	EA	SILENCER	SR64	GRY	IVE

HARDWARE SET: 19

DOOR NUMBER:
119.1 119.2

EACH TO HAVE:

6	EA	HINGE	5BB1 4.5 X 4.5 NRP	652	IVE
2	EA	MANUAL FLUSH BOLT	FB458	626	IVE
1	EA	DUST PROOF STRIKE	DP2	626	IVE
1	EA	STOREROOM LOCK	ND96P6D RHO 14-042	626	SCH
1	EA	LOCK GUARD	LG13	630	IVE
1	EA	OH STOP	90S	630	GLY
1	EA	SURFACE CLOSER	4111 STD SCUSH	689	LCN
2	EA	KICK PLATE	8400 10" X 2" LDW B-CS	630	IVE
1	EA	RAIN DRIP	142A X D.W. +4"	AA	ZER
1	SET	SEALS	8303AA X D.S.	AA	ZER
1	EA	ASTRAGAL	44SP X 188S X D.H. - MOUNT PUSH SIDE INACTIVE LEAF	600	ZER
2	EA	DOOR SWEEP	39A X D.W.	A	ZER
1	EA	THRESHOLD	8655A X D.W.	A	ZER

HARDWARE SET: 20

DOOR NUMBER:
121.1

EACH TO HAVE:

3	EA	HINGE	5BB1 4.5 X 4.5 NRP	652	IVE
1	EA	STOREROOM LOCK	ND80P6D RHO	626	SCH
1	EA	SURFACE CLOSER	4111 STD CUSH	689	LCN
1	EA	KICK PLATE	8400 10" X 2" LDW B-CS	630	IVE
3	EA	SILENCER	SR64	GRY	IVE

ALTERNATES

HARDWARE SET: 21

DOOR NUMBER:
107.1

EACH TO HAVE:

1	EA	CYLINDER	20-057 OR 20-061 AS REQ'D	626	SCH
1	EA	CARD READER	BY ACCESS CONTROL INTEGRATOR BALANCE OF HARDWARE BY DOOR MANUFACTURER		

HARDWARE SET: 22

DOOR NUMBER:
109.1

EACH TO HAVE:

ALL HARDWARE BY DOOR MANUFACTURER

HARDWARE SET: 23

DOOR NUMBER:
115.1

EACH TO HAVE:

2	EA	CONT. HINGE	112HD	628	IVE
1	EA	REMOVABLE MULLION	KR4954-STAB-ANGLE PLATE	689	VON
2	EA	PANIC HARDWARE	99-L-06	626	VON
2	EA	RIM CYLINDER	20-057	626	SCH
1	EA	MORTISE CYLINDER	20-061	626	SCH
2	EA	SURFACE CLOSER	4021 STD	689	LCN
2	EA	MOUNTING PLATE	4020-18G	689	LCN
2	EA	WALL STOP	WS406/407CVX	630	IVE
1	EA	MULLION SEAL	8780N X D.H.	BK	ZER
1	SET	SEALS	BY ALUM DOOR/FRAME MFG		

HARDWARE SET: 24

DOOR NUMBER:
118.1

EACH TO HAVE:

3	EA	HINGE	5BB1 4.5 X 4.5 NRP	652	IVE
1	EA	STOREROOM LOCK	ND80P6D RHO	626	SCH
1	EA	OH STOP	90S	630	GLY
3	EA	SILENCER	SR64	GRY	IVE

HARDWARE SET: 25

DOOR NUMBER:
119.1 119.2

EACH TO HAVE:

6	EA	HINGE	5BB1 4.5 X 4.5 NRP	652	IVE
2	EA	MANUAL FLUSH BOLT	FB458	626	IVE
1	EA	DUST PROOF STRIKE	DP2	626	IVE
1	EA	STOREROOM LOCK	ND80P6D RHO 14-042	626	SCH
2	EA	OH STOP	90S	630	GLY
1	EA	ASTRAGAL	44SP X 188S X D.H. - MOUNT PUSH SIDE INACTIVE LEAF	600	ZER
2	EA	SILENCER	SR64	GRY	IVE

HARDWARE SET: 26

DOOR NUMBER:
120.2 120.3

EACH TO HAVE:

2	EA	CONT. HINGE	112HD	628	IVE
1	EA	REMOVABLE MULLION	KR4954-STAB-ANGLE PLATE	689	VON
1	EA	PANIC HARDWARE	99-EO	626	VON
1	EA	PANIC HARDWARE	99-NL-OP-110MD	626	VON
1	EA	RIM CYLINDER	20-057	626	SCH
1	EA	MORTISE CYLINDER	20-061	626	SCH
2	EA	OFFSET PULL	8190HD-10"	630	IVE
2	EA	OH STOP	100S	630	GLY
2	EA	SURFACE CLOSER	4021 STD	689	LCN
2	EA	MOUNTING PLATE	4020-18G	689	LCN
1	EA	MULLION SEAL	8780N X D.H.	BK	ZER
2	EA	DOOR SWEEP	39A X D.W.	A	ZER
1	EA	THRESHOLD	8655A X D.W.	A	ZER
1	SET	SEALS	BY ALUM DOOR/FRAME MFG		

HARDWARE SET: 27

DOOR NUMBER:
120.4

EACH TO HAVE:

6	EA	HINGE	5BB1HW 4.5 X 4.5 NRP	652	IVE
1	EA	REMOVABLE MULLION	KR4954 STAB	689	VON
2	EA	PANIC HARDWARE	99-EO	626	VON
1	EA	MORTISE CYLINDER	20-061	626	SCH
2	EA	SURFACE CLOSER	4111 STD SCUSH	689	LCN
1	EA	RAIN DRIP	142A X D.W. +4"	AA	ZER
1	SET	SEALS	8303AA X D.S.	AA	ZER
1	EA	MULLION SEAL	8780N X D.H.	BK	ZER
2	EA	DOOR SWEEP	39A X D.W.	A	ZER
1	EA	THRESHOLD	8655A X D.W.	A	ZER

EXIT ONLY

END OF SECTION

DOOR INDEX

Door Numbers	HwSet#	✓
100.1	01	
101.1	02	
102.1	03	
103.1	04	
104.1	05	
105.1	06	
105.2	07	
105.3	07	
105.4	07	
105.5	08	
107.1	09	✓
107.1 ALT	21	✓
109.1	10	✓
109.1 ALT	22	✓
109.2	11	✓
110.1	12	
111.1	13	
112.1	14	
113.1	15	✓
114.1	15	✓
115.1	16	
115.1 ALT	23	
116.1	17	
116.2	18	
117.1	17	
117.2	18	
117.3	04	
118.1	01	
118.1 ALT	24	
119.1	19	
119.1 ALT	25	
119.2	19	
119.2 ALT	25	
120.2 ALT	26	
120.3 ALT	26	
120.4 ALT	27	
121.1	20	

SECTION 08 71 13

AUTOMATIC DOOR OPERATORS

PART 1 - GENERAL

1.1 SUMMARY

A. Section includes: Automatic electrical swinging door operating equipment, controls, and push plates.

B. Related sections:

1. Section 01 23 00 - Alternates: Additive Alternative No. 6 to provide automatic sliding entrance door systems specified in Section 08 42 30 - Automatic Sliding Entrance Doors in lieu of hinged doors with automatic operators specified in this Section.

2. Section 08 41 14 - Aluminum Doors, Windows, and Framing: Glazed aluminum, hinged, entrance doors to receive automatic door operators specified in this Section as part of Base Bid..

3. Division 26 - Electrical: General requirements for providing power and wiring automatic door operator.

1.2 REFERENCES

A. ADA Standards for Accessible Design - Americans with Disabilities Standards for Accessible Design.

B. ANSI 156.10 - Power Operated Pedestrian Doors.

C. ANSI A156.19 - Power Assist and Low Energy Power Operated Doors.

D. UL 325 - Electric Door, Drapery, Gate, Louver, and Window Operators and Systems.

1.3 SUBMITTALS

A. Submit in accordance with Section 01 33 00 - Submittal Procedures:

1. Product data. Provide descriptions of proposed functions and operations of automatic door operators.

2. Shop drawings: Indicate layout and dimensions, head and other details, elevations, components, anchorage, materials, finishes, electrical characteristics, and connection requirements.

3. Manufacturer's installation instructions.

B. Provide in accordance with Section 01 78 00 - Closeout Submittals, operation and maintenance manuals for automatic door operators.

1.4 QUALITY ASSURANCE

A. Products and installation shall conform to ADA Standards for Accessible Design, ANSI A156.10, ANSI A156.19, and UL 325.

B. Manufacturer: Company specializing in manufacturer of automatic door operating equipment with 3 years minimum experience.

C. Installer shall be approved by manufacturer and have 3 years minimum experience installing automatic door operators.

PART 2 - PRODUCTS

2.1 ACCEPTABLE MANUFACTURERS

A. Horton Automatics, Corpus Christi, Texas; 800-531-3111.

B. Manufacturers of equivalent products submitted and approved in accordance with Section 01 25 13 - Product Substitution Procedures.

2.2 SYSTEM DESCRIPTION

A. Operator for each pair of doors indicated on Drawings to be equipped with automatic operation to be self contained system consisting of:

1. Head mounted electric operator to open simultaneously a pair of doors.

2. Pair of push plate switches, door jamb mounted on both sides of openings and used to activate operators when depressed.

3. Enclosure, attachment hardware, controls, wiring, and other components and accessories required for complete, functional installation.

B. Performance criteria:

1. Low energy with slow opening and closing speed. Powered open with motor working through reduction gears and closed by spring force.

2. Doors opened automatically with operator or manually with power on or off.

3. Maximum opening and closing force: 15 pounds.

4. Speeds: Adjustable from 4 to 6 seconds.

5. Time delay: Adjustable from 2 to 30 seconds.

6. Closing force: 8 pounds.

7. Safety features:

a. Door reopens when stopped during closing cycle.

b. When obstructed during opening cycle, power shut off to operator allowing door to close. Door can be reactivated to open at any time during closing and becomes automatic as soon as door completely closes.

8. Locked door feature: Current shut off to motor if applied when door is locked or otherwise prevented from opening.

2.3 OPERATOR

A. Type: Low-power, automatic and manual, self-contained electromechanical swinging door operator; Series 4100 LE Extra Heavy Duty Low Energy Operator as manufactured by Horton Automatics.

B. Motor: Permanent magnet DC, 1/8 HP, 1,800 RPM, 1.25 amp, 120 VAC with variable speed, reversing, and high torque.

C. Shaft: Rotating type with double sealed precision ball bearings lifetime lubricated.

D. Gears: Helical type.

E. Closer: Adjustable force, spring closer consisting of 4 independent coil springs separated by Teflon discs and enclosed in spring box.

F. Transformer: 2.5 amp 120 VAC.

G. Controls: Solid state type incorporating adjustable time delays and speeds. Master control unit shall provide for immediate reversal of door motion without undue strain on drive train by supplying stepped voltage to motor.

H. Operating arm: Outswinging.

I. Operator cover: 4-1/2 by 6 inches by 0.125 inch thick extruded aluminum case with bottom access panel with clear anodized aluminum finish. Cover to extend full width of double door opening.

J. Provide ON/OFF reset switch on underside of operator cover to activate or deactivate door operator.

2.4 PUSH PLATE SWITCH

A. Type: Stainless steel, door jamb mounted, push-plate switch with engraved handicap symbol and text "PRESS TO OPEN" as manufactured by Horton Automatics.

B. Function: Wired to operator to send activation signal when pushed.

PART 3 - EXECUTION

3.1 COORDINATION

A. Coordinate provision of automatic door operators with Building control, monitoring, and security system and procedures.

B. Coordinate electrical requirements to ensure correct power supply and wiring for operators and push plates.

C. Coordinate mounting requirements with aluminum door frame fabrication specified in Section 08 41 14 - Aluminum Doors, Windows, and Framing.

D. Coordinate with installation of other hardware for aluminum glazed doors specified in Section 08 41 14 - Aluminum Doors and Frames and Section 08 10 00 - Door Hardware.

3.2 INSTALLATION

A. Install in accordance with manufacturer's instructions and reviewed shop drawings. Firmly anchor components to building elements. Conceal wiring.

B. Adjust operator and controls for optimum condition and safety. Ensure that pair of doors operate in unison.

C. After installation, test automatic operators. Cycle door assembly through all required functions a minimum of five times. Verify speed, opening and closing forces, automatic and manual operation, controls, motion detector pattern, activation signal, and safety features.

D. Demonstrate operation and maintenance of automatic door operators to Owner's representatives in accordance with Section 01 79 00 - Demonstration and Training.

END OF SECTION

SECTION 08 80 00

GLAZING

PART 1 - GENERAL

1.1 SUMMARY

A. Section includes monolithic, insulating, clear, annealed, fully tempered, and low-E glass and accessories for:

1. Aluminum glazed doors.
2. Aluminum framed automatic sliding entrance door assemblies.
3. Aluminum framed fixed windows, sidelights, and transoms.
4. Wood and metal door vision lights.

B. Related sections:

1. Section 08 11 00 - Hollow steel door vision lights.
2. Section 08 14 00 - Wood Doors: Wood door vision lights.
3. Section 08 41 14 - Aluminum Doors, Windows, and Framing: Aluminum framing for field glazed sidelights, transoms, and fixed windows and for factory glazed aluminum doors and operable windows.
4. Section 08 42 30 - Automatic Sliding Entrance Doors: Aluminum framed, full glazed, automatic sliding entrance door assemblies.
5. Section 10 28 13 - Toilet Accessories: Stainless steel framed mirrors.

1.2 REFERENCES

A. ASCE 7 - American Society of Civil Engineers Minimum Design Loads for Buildings and Other Structures.

B. ANSI Z97.1 - Safety Performance Specifications and Methods of Test for Safety Glazing Material Used in Buildings.

C. ASTM C1036 - Flat Glass.

D. ASTM C1048 - Heat Treated Float Glass, Kind HS, Kind FT Coated and Uncoated.

E. ASTM C1172 - Laminated Architectural Flat Glass.

F. ASTM E546 - Frost Point of Sealed Insulating Glass Units.

G. ASTM E576 - Frost Point of Sealed Insulating Glass Units in Vertical Position.

H. ASTM E773 - Accelerated Weathering for Sealed Insulating Glass Units.

I. ASTM E774 - Classification of the Durability of Sealed Insulating Glass Units.

J. ASTM E1300 - Practice for Determining the Minimum Thickness and Type of Glass Required to Resist a Specified Load.

K. CPSC 16 CFR 1201 - Consumer Product Safety Commission Safety Standard for Architectural Glazing Materials.

L. FGMA - Glazing Manual, Flat Glass Marketing Association.

M. International Code Council (ICC) ICC IBC - International Building Code.

1.3 PERFORMANCE REQUIREMENTS

A. Provide and install glass to withstand thermal movement and wind and impact loads without breakage, loss, and other failure in accordance ASTM E1300 loads determined by ASCE 7.

B. Provide and install gaskets and seals to resist water and air penetration.

1.4 QUALITY ASSURANCE

A. Glass manufacturer: Company specializing in manufacture of clear and tinted glass products with 10 years minimum successful experience.

B. Glass fabricator: Company specialized in fabricating insulating, heat strengthened, tempered, laminated, glass units with 5 years minimum successful experience.

C. Comply with safety requirements of following standards. Where discrepancies exist, more stringent requirement shall govern.

1. Consumer Product Safety Commission 16 CFR 1201.

2. ICC IBC.

D. Comply with FGMA - Glazing Manual.

E. Each piece of safety glazing shall be permanently labeled with appropriate marking.

1.5 SUBMITTALS

A. Provide in accordance with Section 01 33 00 - Submittal Procedures:

1. List of proposed products and product data.

2. Fabricator's certificates: Certify that safety glass units and sealed insulating glass units meet or exceed specified requirements.

3. Copy of warranty required by Paragraph 1.6 for review by Architect.

1.6 WARRANTY

A. Provide under provisions of Section 01 78 00 - Closeout Submittals:

1. 10 year fabricator's warranty for sealed glass units to cover replacement in event of seal failure and interpane dusting and misting.

PART 2 - PRODUCTS

2.1 ACCEPTABLE MANUFACTURERS

A. Glass:

1. Libbey-Owens Ford, Toledo, Ohio; 419-247-4721.

2. Pilkington, Toledo, Ohio; 419-246-6078.

3. PPG Industries, Inc. Pittsburgh, Pennsylvania; 800-377-5267.

4. Viracon, Owatonna, Minnesota, 507-451-9555; www.viracon.com.

B. Requests to use equivalent products of other manufacturers shall be submitted in accordance with Section 01 25 13 - Product Substitution Procedures.

2.2 GLASS

A. Clear float glass: Clear, annealed, float glass 1/4 inch thick, conforming to ASTM C1036, Type I, Class 1, Quality q3.

1. Visible light transmittance: 89 percent.

2. Ultra violet transmittance: 65 percent.

3. Winter nighttime U-value: 1.09.

4. Summer daytime U-value: 1.03.

5. Shading coefficient: 0.94.

6. Solar heat gain coefficient: 0.81.

7. Light to solar gain: 1.10.

B. Low emissivity (low-E) glass:

1. Type: Clear glass with neutral coating pyrolytically applied to produce durable surface and resulting in improved thermal performance and reduced solar heat gain; Solarban 60 as manufactured by PPG Industries, Inc.

a. Solar energy blocked: 60 percent minimum.

b. Appearance: Similar to clear, uncoated glass.

c. Visible light transmittance: 70 percent.

d. Solar heat gain coefficient: 0.38.

e. Light to solar gain: 1.84.

C. Heat strengthened glass: Provide heat strengthened, annealed glass components where indicated or required to adequately support imposed loads, to allow for large glass size, and resist anticipated thermal stresses in accordance with ASTM C1048, Kind HS.

D. Fully tempered glass:

1. Provide heat tempered, annealed glass components where indicated or required to adequately resist loading conditions, size of units, and anticipated thermal stresses in accordance with ASTM C1048, Kind FT.

2. Fully tempered glass shall meet requirements of ANSI Z97.1 and CPSC 16 CFR to qualify as safety glass.

E. Laminated glass: Fabricate by bonding two or more glass panes with transparent, flexible interlayment material in accordance with ASTM C1172.

1. Laminated glass shall meet requirements of ANSI Z97.1 and CPSC 16 CFR to qualify as safety glass.

2.3 FABRICATED GLASS UNITS

A. Fabricate the following glazing units using glass products specified in Paragraph 2.2. Refer to Drawings for required sizes and locations.

B. Thickness: Indicated glass thickness are minimums. Provide glass units with thickness as required for glass type, size, and to accommodate performance requirements specified in Paragraph 1.3.

C. Heat treatment: Provide heat strengthened or fully tempered glass units where indicated or as required to accommodate performance requirements specified in Paragraph 1.3.

D. Insulating glass units: Fabricate insulating glass units with two panes separated by air space.

1. Comply with ASTM E546, ASTM E576, ASTM E773, and ASTM E774.

2. Seal edge and evacuate interpane space.

E. Clean cut glass units to accommodate opening sizes and edge and bite conditions.

F. Types:

1. Type G1: 1 inch thick, clear, insulating, low-E, safety glass.

a. Inside lite: 1/4 inch clear fully tempered safety glass and Low-E coating on No. 3 surface.

b. Air space: ½ inch.

c. Outside lite: 1/4 inch clear laminated safety glass.

d. Maximum U-value:

1) Winter nighttime: 0.29 BTU per hour per square foot per degree F.

2) Summer daytime: 0.26 BTU per hour per square foot per degree F.

e. Maximum solar heat gain coefficient (SHGC): 0.38.

f. Transmittance:

1) Visible light: 70 percent.

2) Solar energy: 33 percent.

3) Ultra violet light: 10 percent.

2. Type G2: 1/4 inch thick, clear, monolithic, laminated safety glass.

2.4 ACCESSORIES

A. Provide glazing accessories as recommended by manufacturer and required for complete installation.

B. Setting blocks: Neoprene or EPDM, Shore A durometer hardness between 70 to 90.

C. Spacer shims: Neoprene, 50 Shore A durometer hardness.

D. Glazing tape: Pre-formed butyl compound, 10 to 15 Shore A durometer hardness, coiled on release paper, black.

E. Sealants:

1. Compatible with materials and conditions as recommended by glass manufacturer.

2. Sealants used in interior locations meet the requirements of the California Department of Health Services Standard Practice for the Testing of Volatile Organic Emissions From Various Sources Using Small-Scale Environmental Chambers, including 2004 Addenda.

PART 3 - EXECUTION

3.1 SCHEDULE

A. Provide glass types as specified in Paragraph 2.3 in locations indicated on Drawings and as scheduled in Glazing Schedule on Drawings. Ensure that safety glass is installed at locations required by code to be safety glazing.

3.2 PREPARATION

A. Verify glass framing is accurately sized, structurally sound, square, and without bow.

B. Verify surfaces of glazing channels and recesses are clean, free of obstructions, and ready to receive glazing.

C. Inspect edges of glass. Install only glass with clean cut edges. Do not bump, drag, or brush edges against sash or hard objects. Avoid scratching.

D. Clean contact surfaces with solvent and wipe dry.

E. Prime surfaces as required for adhesion of sealants.

3.3 INSTALLATION

A. Comply with FGMA - Glazing Manual.

B. Install setting blocks and spacers as recommended by referenced glazing standards and glass manufacturer's recommendations.

C. Provide edge blocking as required to prevent sideways movement of glass in glazing channel.

D. Tape glazing:

1. Cut glazing tape to length and set against permanent stops, projecting slightly above sightline.

2. Rest glass on setting blocks and push against tape for full contact at perimeter of pane.

3. Place spacers below sightline and install removable glazing stop against spacers.

4. Fill gap between pane and removable glazing stop with sealant to uniform line level with bite of frame.

5. Knife trim protruding edge of glazing tape.

E. Gasket glazing:

1. Fabricate two piece compression gaskets to exactly fit openings.

2. Install soft compression gasket against permanent stops. Miter cut and bond together corners.

3. Rest glass on setting blocks. Insert dense compression gasket to press glass against soft gasket and lock in place against removable stop.

4. Apply sealant to gasket joints.

F. Wet sealant glazing:

1. Install spacers and sealant backing between glass and stops. Position to control depth and width of sealant.

2. Apply sealant to glazing channels without voids. Ensure complete bond of sealant to glass and channel surfaces.

3. Tool exposed sealant surfaces to provide wash away from glass.

3.4 CLEANING

A. Clean glass immediately following installation in accordance with manufacturer's instructions. Remove sealants and other glazing materials from adjacent finished surfaces.

B. Remove labels.

C. Prior to final inspection, clean all glazing.

END OF SECTION

SECTION 09 21 16

GYPSUM BOARD ASSEMBLIES

PART 1 - GENERAL

1.1 SUMMARY

A. Section includes:

1. Metal stud interior partition framing.
2. Metal ceiling framing.
3. Gypsum board.
4. Fiber reinforced (FRP), abuse resistant gypsum board.
5. Water (MOISTURE) - Resistant gypsum board.
6. Glass mat faced tile backer board.

B. Related sections:

1. Section 05 40 00 - Cold-Formed Structural Metal Framing: Load bearing steel studs for exterior walls.
2. Section 06 10 00 - Rough Carpentry: Wood blocking for metal studs.
3. Sections 07 21 00 - Building Insulation: Acoustical insulation for interior partitions.
4. Section 08 31 00 - Access Doors and Panels: Metal access panels installed in gypsum board partitions and ceilings.
5. Section 09 91 00 - Painting: Finishing of gypsum board surfaces.

1.2 REFERENCES

A. American Society for Testing and Materials (ASTM):

1. ASTM C36 - Gypsum Wallboard.
2. ASTM C79 - Gypsum Sheathing Board.
3. ASTM C475 - Joint Treatment Materials for Gypsum Wallboard Construction.
4. ASTM C630 - Water Resistant Gypsum Backing Board.
5. ASTM C645 - Non-Load (Axial) Bearing Steel Studs, Runners (Track), and Rigid Furring Channels for Screw Application of Gypsum Board.
6. ASTM C754 - Installation of Steel Framing Members to Receive Screw Attached Gypsum Board.
7. ASTM C840 - Application and Finishing of Gypsum Board.

8. ASTM C1178 - Glass Mat Water-Resistant Gypsum Backing Board.

9. ASTM D3273 - Standard Test Method for Resistance to Growth of Mold on the Surfaces of Interior Coatings in an Environmental Chamber.

B. Gypsum Association (GA):

1. GA-201 - Gypsum Board for Walls and Ceilings.

2. GA-214 - Recommended Levels of Gypsum Board Finishes.

3. GA-216 - Recommended Specifications for the Application and Finishing of Gypsum Board.

1.3 PERFORMANCE REQUIREMENTS

A. Steel stud partition framing shall be provided in accordance with manufacturer's standard load tables to withstand design pressures with the following maximum deflections:

1. Ground floor entries: L/120 at 15 PSF.

2. All other partitions: L/240 at 5 PSF.

1.4 SUBMITTALS

A. Submit in accordance with Section 01 33 00 - Submittal Procedures:

1. List of proposed products and product data.

2. Metal framing load tables: Manufacturer's standard load tables annotated to identify Project selections and conditions. Indicate type, size, gage, height, and spacing of studs being provided to accommodate performance requirements specified in Paragraph 1.3.

3. Sample of gypsum board textured finish:

a. Minimum size: 2 by 4 feet.

b. Apply specified texture to complete sample. On one half of sample, apply paint finish over texture as specified in Section 09 91 00 - Painting.

c. Provide additional samples as requested by Architect.

d. Accepted sample shall be used as basis of acceptance for field applied texture.

4. Manufacturer's installation instructions.

PART 2 - PRODUCTS

2.1 ACCEPTABLE MANUFACTURERS

A. Lightgage metal framing materials:

1. Gold Bond Building Products, National Gypsum Company, Charlotte, North Carolina; 800-628-4662.

2. National Gypsum Company, Charlotte, North Carolina; 800-628-4662; www.nationalgypsum.com.

3. USG Interiors, Inc., Chicago, Illinois; 800-874-4968; www.usg.com.

B. Gypsum board materials:

1. American Gypsum, Albuquerque, New Mexico; 505-823-2022; 800-545-6302.

2. Gold Bond Building Products, National Gypsum Company, Charlotte, North Carolina; 800-628-4662.

3. Georgia-Pacific Corporation, Atlanta, Georgia; 800-225-6119; www.gp.com.

4. National Gypsum Company, Charlotte, North Carolina; 800-628-4662; www.nationalgypsum.com.

5. USG Interiors, Inc., Chicago, Illinois; 800-874-4968; www.usg.com

C. Requests to use equivalent products of other manufacturers shall be submitted in accordance with Section 01 25 13 - Product Substitution Procedures.

2.2 FRAMING MATERIALS

A. Studs and tracks: ASTM C645, roll formed, channel shaped, galvanized sheet steel.

1. Widths: 3-5/8 inches or as otherwise indicated on Drawings.

2. Minimum base metal thickness: 0.0179 inch (25 gage).

3. Provide channel shaped floor, top, and roof juncture slip tracks.

B. Ceiling suspension members: ASTM C645 roll formed galvanized sheet steel:

1, Main carrying channels: 1-1/2 inches deep, 16 gage.

2. Furring channels: Hat shaped, 20 gage, 7/8 inch deep.

C. Ceiling suspension system: Modular grid system of main tees and interlocking cross channels for screw attachment of gypsum board; Donn Rigid X Suspension System as manufactured by USG Interiors:

1. Main tees: 1-1/2 inches deep.

2. Cross channels: 7/8 and 1-1/2 inches deep as required for specific loading conditions.

D. Fasteners: ASTM C514.

2.3 GYPSUM BOARD MATERIALS

A. Regular gypsum board: ASTM C36, 5/8 inch thick, 4 feet wide, maximum permissible length, ends square cut, and tapered and beveled edges.

C. Water resistant gypsum board: ASTM C630, 5/8 inch thick, 4 feet wide, maximum permissible length, ends square cut, tapered and beveled edges.

D. Abuse resistant gypsum board: Fiber reinforced gypsum panels (FRP) with fiberglass mesh in back of panel, 5/8 inch thick, tapered edges, and complying with ASTM C630 and ASTM C1396; Hi-Impact Brand XP Wallboard as manufactured by National Gypsum Company.

E. Tile backer board: ASTM C1178, backer board for high humidity areas, ½ inch thick; Dens-Shield as manufactured by Georgia-Pacific Corporation. Board consists of water resistant treated core with glass mat moisture protection coating and embedded glass mats both sides and face side surfaced with heat-cured copolymer water and vapor resistant coating.

2.4 ACCESSORIES

A. Corner beads: Galvanized steel with 1-1/4 inch knurled flanges.

B. Casing beads: Galvanized steel, L shaped with 1 inch knurled flange and height to match thickness of gypsum board.

C. Joint materials: ASTM C475, reinforcing tape, joint compound, adhesive, water, and fasteners.

D. Finishing compound: Drywall finishing compound complying with ASTM C475 and providing a smooth, hard, humidity resistant, sandable finish and designed for skim coating gypsum board and plaster surfaces; Proform Sta-Smooth Joint Compound as manufactured by National Gypsum Company.

E. Fasteners: Type S countersunk drywall screws.

PART 3 - EXECUTION

3.1 METAL STUD INSTALLATION

A. Install studs of the following sizes and thickness as indicated on Drawings and to comply with performance requirements specified in Paragraph 1.3.

1. Maximum stud spacing: 16 inches on center.

2. Install double studs at door frame jambs and at other openings.

3. Extend studs to roof deck for sound control partitions with acoustical insulation, and elsewhere as shown on Drawings.

4. At roof deck, form a slip joint with double track to allow for building movement. Stop gypsum board short of deck and seal with backer rod and sealant.

5. Install a runner section between door jamb studs and adjacent stud at door head height.

B. Blocking: Screw wood blocking to studs for support of plumbing fixtures, toilet accessories, cabinets, and hardware in accordance with Section 06 10 00 - Rough Carpentry.

3.2 CEILING FRAMING INSTALLATION

A. At Contractor's option, suspended gypsum board ceilings may be framed with either:

1. Main carrying channels and hat furring channels.

2. Modular grid system of main tees and interlocking cross channels.

B. Where water resistant gypsum board is installed as ceiling finish, space furring channels or tees at 12 inches maximum.

C. Install in accordance with ASTM C745 and manufacturer's instructions.

D. Coordinate location of hangers with other work.

E. Install ceiling framing independent of walls and above ceiling work.

F. Brace entire suspension system for seismic and other lateral loads.

3.3 ACOUSTICAL ACCESSORIES INSTALLATION

A. Install acoustical insulation specified in Section 07 21 00 - Building Insulation in partitions and above ceilings where indicated on Drawings.

B. Place acoustical insulation in partitions tight within spaces, around cut openings, behind and around electrical and mechanical items within partitions, and tight to items passing through partitions.

C. Install acoustical sealant specified in Section 07 92 00 - Joint Sealants within partitions and around penetrations in accordance with manufacturer's instructions.

D. Place acoustical insulation above ceiling after gypsum board is applied. Extend to roof deck. Fit tight between studs.

3.4 GYPSUM BOARD INSTALLATION SCHEDULE

A. Water resistant gypsum board: Toilets, Kitchen, Custodial, Mechanical and other wet and high humidity rooms as indicated in Drawing Finish Schedule.

B. Glass mat faced tile backer board: As substrate to receive ceramic wall tile specified in Section 09 31 00 - Ceramic Tile.

C. Install abuse resistant fiber reinforced (FRP) gypsum board full height on partitions and walls indicated in Finish Schedule on Drawings.

D. Regular gypsum board: All other partitions and ceilings.

3.5 GYPSUM BOARD INSTALLATION

A. Install gypsum board in accordance with GA 201 and GA 216 and manufacturer's instructions.

B. Erect gypsum board in most economical direction with ends and edges occurring over firm bearing.

C. Use screws to fasten gypsum board to metal framing.

D. Treat cut edges and holes in moisture resistant gypsum board with sealant.

E. Place corner beads at external corners, at edges of decorative ceiling and wall reveals, and other locations as detailed. Use longest practical length. Place edge trim where gypsum board abuts dissimilar materials.

F. Locate control joints in gypsum board as indicated on Drawings and reviewed shop drawings, at other locations subject to movement, and as required to avoid future development of cracks.

3.6 JOINT TREATMENT

A. Tape, fill, and sand exposed joints, edges, and corners to produce smooth surface ready to receive finishes.

B. Type A finish for public and occupied areas: Provide Level 4 finish in accordance with ASTM C840, GA-214, and GA-216.

1. Interior angles and intersecting surfaces: Embed tape in joint compound and apply one coat of joint compound over interior angle.

2. Flat joints: Embed tape in joint compound and apply two separate coats of joint compound over tape.

3. Fastener heads and accessories: Cover with three separate coats of joint compound.

C. Type B finish for non-public, storage, utility, and other unoccupied areas: Provide Level 3 finish in accordance with GA-214 and GA-216.

1. Interior angles, intersecting surfaces, and flat joints: Embed tape in joint compound and apply one additional coat of joint compound over flat joints and interior angles.

2. Fastener heads and accessories: Cover with two separate coats of joint compound.

3. Joint compound shall be free of tool marks and ridges.

4. Feather coats onto adjoining surfaces so that camber is maximum 1/32 inch.

D. Type D finish for plenum areas above ceilings: Provide Level 1 finish in accordance with GA-214 and GA-216.

1. All joints and interior angles: Cover by embedding tape in joint compound to provide some control of sound and smoke control.

2. Tool marks and ridges are acceptable.

E. Textured finish coat for Types A and B:

1. Prior to applying joint compound and textured finish, prime paint gypsum board in accordance with Section 09 91 00 - Painting.

2. Apply drywall finishing compound to gypsum board surfaces.

3. Verify that surfaces are flat, joints are taped and sanded, and surfaces are ready to receive skim finish coat.

4. Apply in accordance with GA-216.

5. Total thickness: 1/16 inch minimum.

6. Finish: Light orange peel, level, hard finish matching approved sample.

3.7 TOLERANCES

A. Maximum variation from true flatness: 1/8 inch in 10 feet in any direction.

END OF SECTION

SECTION 09 24 00

PORTLAND CEMENT PLASTER

PART 1 - GENERAL

1.1 SUMMARY

A. Section includes: 3-coat Portland cement plaster finish system (stucco) applied to metal stud exterior walls including:

1. Fiber reinforced Portland cement plaster base coats.

2. Pre-mixed colored elastomeric plaster finish coat.

3. Underlayment (Indicated on Drawings as “VAPOR BARRIER”), wire mesh reinforcement, and accessories.

B. Related sections:

1. Section 05 40 00 - Light Gauge Steel Framing: Metal stud exterior wall framing.

2. Section 07 28 00 - Thermal and Air Barrier Wall System: Polyisocyanurate insulating sheathing board with water and air barrier facing installed as substrate for cement plaster finish.

3. Section 09 21 16 - Gypsum Board Assemblies: Gypsum sheathing installed as substrate for cement plaster exterior soffits.

1.2 REFERENCES

A. ASTM C897 - Aggregate for Job-Mixed Portland Cement-Based Plasters.

B. ASTM C926 - Application of Portland Cement-Based Plaster.

C. Portland Cement Association - PCA Plaster (Stucco) Manual.

1.3 SUBMITTALS

A. Provide in accordance with Section 01 33 00 - Submittal Procedures:

1. List of proposed products and product data.

2. Shop drawings with exterior wall elevations showing layout and dimensions for control joints; installation details for terminations at window and door openings, intersections with adjacent materials, and taping of underlayment joints and penetrations.

3. Manufacturer's recommended installation instructions.

4. Samples:

   a. 6 by 6 inch minimum underlayment sample.

   b. One 2 by 2 foot minimum sample for finish texture and color to be used. Prepare samples with same tools and techniques proposed for installation.

1.4 QUALITY ASSURANCE

A. Single source responsibility: All materials and components for cement plaster system shall be products of a single manufacturer or shall be specifically approved and recommended by system manufacturer.

B. Applicator: Company specializing in cement plaster work with 5 years documented experience.

C. Apply cement plaster in accordance with ASTM C926 and PCA Plaster (Stucco) Manual.

1.5 FIELD SAMPLE

A. In accordance with Section 01 40 00 - Quality Requirements, apply exterior cement plaster system to wall containing door or window opening as selected by Architect.

B. Demonstrate color, texture, and quality of flat surface work, control joints, and returns at openings.

C. Accepted sample may remain as part of work and will be used as basis for acceptance of remaining plaster work. Unacceptable samples shall be removed.

1.6 PRE-INSTALLATION CONFERENCE

A. Convene a pre-installation conference prior to commencing work of this Section.

B. Review:

1. Preparedness of metal stud framing and thermal and air barrier system.
2. Condition and acceptability of substrates to receive cement plaster.
3. Architect's finish coat selection.
4. Installation procedures.
5. Application of rigid insulation.
6. Layout of control joints and intersection with door and window openings.
7. Coordination with installation of other work.
8. Protection of installed items and finishes.
9. Availability of materials.
10. Weather conditions forecast.
11. Other items related to successful execution of work.

1.7 ENVIRONMENTAL REQUIREMENTS

A. Cold weather:

1. Do not use frozen materials in mixes.

2. Do not apply plaster to frozen surfaces or surfaces containing frost.

3. Do not apply plaster when substrate or ambient air temperature is less than 45 degrees F nor when temperature is forecast to be less than 45 degrees F within a 24-hour period following application.

B. Hot weather:

1. Protect plaster from uneven and excessive evaporation during hot, dry weather.

2. Do not apply cement plaster when substrate or ambient temperature is above 100 degrees F.

C. Maintain minimum ambient temperature of 45 degrees F during and for 24 hours after application. Construct temporary heated enclosure as required to maintain temperature.

PART 2 - PRODUCTS

2.1 ACCEPTABLE MANUFACTURERS

A. Plaster materials:

1. ParexLahabra, Inc./El Rey Stucco Company, Inc., Albuquerque, New Mexico; 505-873-1180.

2. Sto Corporation, Atlanta, Georgia; 800-221-2397; www.stocorp.com.

B. Underlayment: DuPont Tyvek Weatherization Systems; Wilmington, Delaware; 800-448-9835; www.tyvekconstruction.com.

C. Requests to use equivalent products of other manufacturers shall be submitted in accordance with Section 01 25 13 - Product Substitution Procedures.

2.2 UNDERLAYMENT (Indicated on Drawings as "VAPOR BARRIER")

A. Weather and water resistant, water-vapor permeable, and tear resistant sheet underlayment fabricated from polyethylene fibers bonded by heat and pressure; StuccoWrap as manufactured by DuPont Tyvek Weatherization Systems.

1. Air penetration: Type 1 in accordance with ASTM E1677.

2. Water penetration resistance: 210 cm tested in accordance with AATCC-127.

3. Minimum water vapor transmission: 350 grams per square meter per 24 hours tested in accordance with ASTM E96.

4. Breaking resistance: 30/30 tested in accordance with ASTM D882.

5. Dry tensile strength: 20 PSI minimum in both directions.

6. Tear resistance: 7 pounds tested in accordance with ASTM D117.

7. Surface burning characteristics: Class A flame spread and smoke development tested in accordance with ASTM E84.

B. Tape: High strength, pliable, adhesive tape compatible with underlayment; DuPont Tyvek Tape as manufactured by DuPont Tyvek Weatherization Systems.

2.3 LATHING MATERIALS

A. Stucco netting: 17 gage, galvanized, self-furring stucco netting.

B. Metal lath: Self furring, expanded metal, diamond mesh with galvanized finish.

1. Soffits: 27 by 96 inch sheets, 3.45 pounds per SY.

2. Reinforcing and spanning dissimilar substrates: 4 inch strips, 2.5 pounds per SY diamond mesh.

3. Interior angles: Strips bent into angles with 3 inch legs, 2.5 pounds per SY diamond mesh.

C. Corner beads: 26 gage minimum formed steel with 3 inch expanded or perforated metal flanges, beaded edge, and galvanized finish designed for exterior corners.

D. Corner-rite/corner-aide: Expanded metal, pre-shaped angle for interior corners with galvanized finish.

E. Casing beads: 26 gage minimum formed steel with expanded metal flanges with 7/8 inch square edge bead and galvanized finish.

F. Control joint: 26 gage minimum formed galvanized steel with accordion profile and expanded metal flanges.

G. Expansion joint: 28 gage, galvanized steel free floating expansion joint with 1/4 to 5/8 inch adjustment.

H. Weep screeds: 30 gage, galvanized steel plaster stop with holes for drainage of trapped moisture.

I. Other lath and trim pieces as detailed on Drawings or required for complete functional installation.

J. Anchorages: Galvanized screws, nails, staples, and other approved metal fasteners of type and size recommended by manufacturer to suit application.

2.4 PLASTER MATERIALS

A. Aggregate: Natural sand complying with ASTM C897 and ASTM C144 and graded within the following gradations:

1. No. 4 sieve: 0 percent.

2. No. 8 sieve: 0 to 10 percent.

3. No. 16 sieve: 10 to 40 percent.

4. No. 30 sieve: 30 to 65 percent.

5. No. 50 sieve: 70 to 90 percent.

6. No. 100 sieve: 95 to 100 percent.

B. Water: Clean, fresh, potable, and free from minerals and impurities which can affect plaster.

C. Base coat material: Pre-mixed stucco base coat consisting of Portland cement, lime, and alkali resistant glass and acrylic fibers; Fiber-47 Concentrate as manufactured by ParexLahabra, Inc./El Rey Stucco Company, Inc.

D. Finish coats: Factory-mixed, elastomeric water based acrylic polymer coating with graded aggregate, and integral color; Perma-Flex as manufactured by ParexLahabra, Inc./El Rey Stucco Company, Inc.

1. Colors: Colors as designated by Architect.

2.5 ACCESSORIES

A. Admixture: Additive consisting of acrylic polymers and other ingredients; Superior Additive 200 as manufactured by ParexLahabra, Inc./El Rey Stucco Company, Inc.

B. Secondary mesh reinforcement: Woven alkali resistive treated fiberglass mesh; Krak-Master as manufactured by ParexLahabra, Inc./El Rey Stucco Company, Inc.

2.6 MIXES

A. Mix cement plaster in accordance with ASTM C926 and manufacturer's written instructions.

B. Size batches for complete use within 1 hour after mixing.

C. Use moist, loose sand. Do not use frozen, caked, or lumpy materials.

D. Scratch and brown coats: Mix base coat material with sand and water in accordance with manufacturer's recommended proportions. Add 1 gallon of additive per sack of base coat material.

E. Finish coats: Mix factory prepared finish plaster with water in accordance with manufacturer's instructions.

F. Mechanically mix. Do not hand mix.

1. Clean mixer of set or hardened materials before loading new batch.

2. Maintain mixer in continuous operation while adding materials.

3. Withhold 10 percent water until mixing is nearly complete then add as needed to produce desired working consistency.

G. Do not add any unspecified admixture or other substance to plaster mixes without written approval of Architect.

PART 3 - EXECUTION

3.1 COORDINATION AND PREPARATION

A. Coordinate with installation of:

1. Adjacent wall finishes specified in Section 07 42 13 - Metal Wall Panels.

2. Doors and windows specified in Section 08 41 14 - Aluminum Doors, Windows, and Framing.

B. Inspect exterior steel stud walls scheduled to receive Types 2, 4, and 6 cement plaster finish. Verify framing is structurally sound and suitable for supporting cement plaster finish system.

C. Verify that mechanical and electrical services within walls have been installed, tested, and approved.

D. Report deficiencies to Architect and do not proceed with plastering until corrections are made.

E. Install polyisocyanurate insulating sheathing on metal studs in accordance with Section 07 28 00 - Thermal and Air Barrier Wall System. Install horizontally with Z furring channels spaced as indicated on Drawings and reviewed shop drawings. Ensure reflective face is placed on exterior side.

F. For exterior soffits, install gypsum sheathing on metal framing in accordance with Section 09 21 16 - Gypsum Board Assemblies.

3.2 INSTALLATION OF UNDERLAYMENT AND LATHING MATERIALS

A. Underlayment: Install in accordance with manufacturer's recommended procedures.

1. Apply one ply of underlayment over:

a. Walls: Over thermal and air barrier system specified in Section 07 28 00 - Thermal and Air Barrier Wall System.

b. Soffits: Over gypsum sheathing specified in Section 09 21 16 - Gypsum Board Assemblies.

2. Apply horizontally, shingle fashion. Tape joints and terminations at door, window, and other penetrations.

3. Apply second ply over horizontal or sloping surfaces to be plastered.

4. Attach with large head plastic washer screws or 1-inch minimum crown staples.

4. Ensure that all underlayment joints and penetrations through underlayment are sealed with tape in accordance with underlayment manufacturer's instructions and reviewed shop drawings.

B. Stucco netting: Install on exterior metal stud walls over insulating sheathing, gypsum sheathing, and underlayment. Apply taut with long dimension perpendicular to supports. Lap ends one inch minimum. Securely attach through sheathing to framing members.

C. Metal lath: Install on exterior suspended soffits over gypsum sheathing and underlayment. Apply taut with long dimension perpendicular to supports. Lap ends one inch minimum. Securely attach through sheathing to framing members.

D. Install lathing accessories in maximum lengths. Securely attach with fasteners spaced according to manufacturer's recommendations.

E. Continuously reinforce internal angles with corner mesh.

F. Place corner beads continuously at corners; fasten at outer edges only.

G. Control joints: Place control joints in pattern as indicated on Drawings and reviewed shop drawings.

1. Wire tie joint assemblies to lath; do not anchor to framing substrate.

2. Ensure that joint lines are vertical and horizontal and aligned with door and window openings and building corners.

H. Secure strip mesh diagonally at corners of lathed openings.

I. Place 4 inch wide strips of metal lath centered over junctions of dissimilar backing materials and around doors, windows, and other penetrations.

J. Place casing beads at terminations of plaster finish.

3.3 GENERAL PLASTERING REQUIREMENTS

A. Apply plaster in accordance with ASTM C926, manufacturer's instructions and recommendations, and applicable codes.

B. Interrupt or delay plaster application only at junctions of plaster planes, at openings, or at control joints.

3.4 BASE COAT PLASTERING

A. Scratch coat:

1. Apply to a minimum thickness of 3/8 inch using sufficient trowel pressure to key plaster into metal stucco netting and metal lath and to create bond with CMU substrate.

2. Prior to initial set, scratch horizontally to provide key for brown coat.

B. Brown coat:

1. Apply to a minimum thickness of 3/8 inch using sufficient trowel pressure to key plaster into scratch coat.

2. Rod surface to true plane.

3. Secondary reinforcement: Embed fiberglass reinforcement into wet brown coat of building surfaces. Ensure complete embedment of mesh and smooth to flush.

4. Float or lightly broom to provide for bond with finish coat.

5. Tool to provide V-joint at intersection with frames and other items of metal, wood, or plastic which act as plaster grounds.

C. Moist cure scratch and brown coats:

1. Begin curing process immediately after installation and do not allow curing process to stop prior to complete curing of base coat.

2. Apply fog spray of clear water with sufficiently frequent applications to maintain plaster uniformly moist for a minimum of 48 hours following application.

3.5 FINISH COAT APPLICATION

A. Apply finish coats over substrates scheduled to thickness recommended by manufacturer to achieve desired texture.

B. Apply primer to base coat in accordance with manufacturer's recommended rate and instructions.

C. After stirring to homogeneous consistency, apply finish coat to an entire wall area in a continuous application. Finish from corner to corner or joint to joint to avoid cold joints and staging marks.

D. Trowel or spray apply finish according to manufacturer's instructions to provide fine textured surface. Use sufficient pressure or spray velocity to bond finish coat to substrate.

E. Protect applied finish from airborne contamination and weather until fully dried.

F. Finish texture and thickness to match approved samples.

G. Curing: Air cure finish coat; do not wet cure.

3.6 PATCHING

A. Upon completion, point exterior wall finish coat around trim and other locations where finish coat terminates or meets dissimilar materials.

B. Cut out and replace defective and damaged exterior wall finish coat.

C. Repairs and pointing shall match surrounding finish coat in texture and color.

3.7 CLEANING AND ACCEPTANCE

A. Final finished surfaces shall be straight, flat, and with true angles, uniform joints, and uniform texture.

B. Maximum allowable variation from true flatness: 1/8 inch in 5 feet.

C. Coatings with cracks, blisters, or discoloration will not be accepted. Colors and textures shall match approved samples.

D. Remove protective materials from perimeter trim and adjacent surfaces.

E. Remove all residue and excess items from site. Clean adjacent surfaces affected by work.

END OF SECTION

SECTION 09 31 00

CERAMIC TILE

PART 1 - GENERAL

1.1 SUMMARY

A. Section includes: Ceramic tile for floors, base, and walls using thinset and mortar bed methods. Includes adhesives, mortar, grout, and sealer.

B. Related sections:

1. Section 09 21 16 - Gypsum Board Assemblies: Coated glass mat tile backer board.

1.2 REFERENCES

A. ANSI A118.1 - Dry-Set Portland Cement Mortar.

B. ANSI A118.4 - Latex-Portland Cement Mortar.

C. ANSI A118.6 - Ceramic Tile Grouts.

D. ANSI A118.9 - Cementitious Backer Units.

E. ANSI A137.1 - Standard Specification for Ceramic Tile.

F. ASTM C150 - Portland Cement.

G. ASTM C206 - Finishing Hydrated Lime.

H. ASTM C373 - Standard Test Method for Water Absorption, Bulk Density, Apparent Porosity and Apparent Specific Gravity of Fired Whiteware Products.

I. ASTM C648 - Standard Test Method for Breaking Strength of Ceramic Tile.

J. ASTM C1028 - Standard Test Method for Determining the Static Coefficient of Friction of Ceramic Tile and Other Like Surfaces by the Horizontal Dynamometer Pull.

K. Collaborative for High Performance Schools (CHPS); www.chps.net.

L. TCA (Tile Council of America) - Handbook for Ceramic Tile Installation.

1.3 SUBMITTALS

A. Provide in accordance with Section 01 33 00 - Submittal Procedures:

1. Product data for ceramic tile, tile setting materials, and metal edge strips.

2. Samples:

a. Tile.

b. Manufacturer's full range of grout colors for selection by Architect.

3. Manufacturer's installation instructions.

1.4 QUALITY ASSURANCE

A. Perform work in accordance with ANSI A137.1.

B. Conform to TCA Handbook for Ceramic Tile Installation.

C. Installer: Company specializing in installing tile with 3 years minimum experience.

1.5 ENVIRONMENTAL REQUIREMENTS

A. Protect adhesives from freezing or overheating in accordance with manufacturer's instructions.

B. Do not install adhesives in closed, unventilated rooms.

C. Maintain 50 degrees F during installation of mortar materials.

PART 2 - PRODUCTS

2.1 ACCEPTABLE MANUFACTURERS

A. Tile:

1. Emser Tile and Natural Stone, Los Angles, California; 323-650-2000; www.emsertile.com.; Local representative: Emser Tile, Albuquerque, New Mexico, 505-821-2110..

2.Daltile Corporation, Dallas, Texas; 214-933-8453; www.daltileproducts.com.

B. Adhesives, mortar, and grout: Laticrete International, Inc. Bethaney, Connecticut; 800-243-4788; www.laticrete.com.

C. Sealer: Miracle Sealants Company, Irwindale, California; 800-350-1901.

D. Sealer: Aluminum edge trim: Schlutetr Systems LP, Plattsburgh, New York; 800-472-4588; www.schluter.com.

E. Requests to use equivalent products of other manufacturers shall be submitted in accordance with Section 01 63 00 - Product Substitution Procedures. Architect reserves right to reject proposed substitutions on basis of color and pattern compatibility even though fabrication and materials are equivalent.

2.2 FLOOR TILE

A. Type: Porcelain mosaic tile, ANSI 137.1.

B. Size: 2 by 2 inches.

C. Surface finish: Unglazed.

D. Edge: Cushioned.

E. Color and pattern: Twilight as manufactured Emser Tile.

F. Base: 2 by 2 inch, L-shaped coved base to match floor tile.

2.3 INTERIOR WALL TILE

A. Type: Glazed ceramic wall tile, ANSI 137.1.

B. Size: 12 by 24 inches.

C. Surface finish: Glazed.

D. Edge: Cushioned.

E. Pattern and colors: Biscuit as manufactured by EmserTile.

F. Trim: Match color pattern of floor and wall tile as shown on Drawings and reviewed shop drawings. Provide shapes as required by Project conditions for finished work.

2.4 MORTAR BED

A. Materials:

1. Cement: ASTM C150, Type I.

2. Lime: ANSI/ASTM C206, Type S.

3. Aggregate: Natural sand within the following gradations:

a. No. 4 sieve: 0 percent.

b. No. 8 sieve: 0 to 10 percent.

c. No. 16 sieve: 10 to 40 percent.

d. No. 30 sieve: 30 to 65 percent.

e. No. 50 sieve: 70 to 90 percent.

f. No. 100 sieve: 95 to 100 percent.

4. Water: Clean, fresh, potable, and free from minerals and impurities which can affect mortar.

B. Mortar bed mix for floors:

1. 1 part Portland cement.

2. 5 parts sand.

2.5 THINSET MATERIALS

A. Thinset mortar: Latex-Portland cement mortar conforming to ANSI A118.4.

2.6 GROUT

A. Latex Portland cement grout: Cementitious, dry cure type with latex additives and resistant to shrinking and staining, ANSI A118.4.

B. Colors: As selected by Architect from manufacturer's full range.

2.7 ACCESSORIES

A. Sealer: Polymerized silicone penetrating sealer that will not change surface of material being treated; 511 Impregnator as manufactured by Miracle Sealants Company.

1. Sealer used in interior locations must be listed on the Collaborative for High Performance Schools (CHPs) website (www.chps.net/manual/lem_table.htm).

B. Edge trim for termination of wall tile: Aluminum molding as detailed on Drawings.

PART 3 - EXECUTION

3.1 PREPARATION

A. Coordinate recessing floor areas to receive ceramic tile with casting of concrete floor slabs specified in Section 03 30 00 - Cast-in-Place Concrete.

1. Depth of mortar bed and tile shall allow for flush transition to adjacent floor finishes.

B. Coordinate placement of concrete slab control joints with provision of ceramic tile expansion joints. Locate concrete control joints to minimize or eliminate requirement for expansion joints in ceramic tile floor finish.

C. Floors to be tiled shall fall within maximum variation of 1/4 inch in 10 feet.

D. Report unacceptable surfaces. Do not tile until surfaces are corrected.

E. Vacuum clean existing surfaces.

F. Seal substrate surface cracks with filler.

3.2 INSTALLATION

A. Install in accordance with appropriate installation method of TCA Handbook.

1. Use TCA Method No. F112 for cast-in-place concrete subfloors:

a. Install 1-1/4 inch cement mortar bed bonded to concrete slab with mortar bed bond coat of Portland cement slurry.

b. Where indicated on Drawings taper mortar bed to slope to floor drains.

c. Allow mortar bed to cure. Thinset tile to cured mortar bed with latex Portland cement mortar bond coat.

d. Grout tile joints with latex Portland cement grout.

e. Install backer board and embed 2 inch wide glass fiber mesh tape in tile adhesive over backer board joints and corners.

2. Use TCA Method No. W245 for interior metal stud partitions with coated glass mat faced tile backer board:

   a. Thinset tile using latex Portland cement mortar.

   b. Grout tile joints with latex Portland cement grout.

B. Tile expansion joints: Provide and locate expansion joints in ceramic tile floor finish at locations over all control joints in concrete floor slabs. Construct in accordance with TCA Method No. EJ171:

   1. Minimum width: Width of concrete control joint.

   2. Install joint in mortar bed directly over concrete control joint.

   3. Keep joint clean of grout, mortar, and other debris.

   4. Install compressible backer rod and urethane sealant as specified in Section 07 92 00 - Joint Sealants.

C. Lay out work so as to minimize cuts. Locate cuts so as to be least conspicuous.

D. Cut and fit tile tight to penetrations through tile. Form corners and bases neatly. Align floor and base joints.

E. Install wall tile in vertical stack bond as indicated on Drawings. Terminate top edge with aluminum trim.

F. Make tile joints uniform in width.

G. Sound tile after setting. Replace hollow sounding units.

H. Allow tile to set for a minimum of 48 hours prior to grouting.

I. Grout tile joints. Make joints watertight, without voids, cracks, or excess grout.

J. Seal all grout joints with sealer applied in accordance with manufacturer's instructions.

3.3 CLEANING AND PROTECTION

A. Thoroughly clean and polish tile surfaces.

B. Limit foot and wheel traffic over finished floor surface.

END OF SECTION

SECTION 09 51 10

SUSPENDED ACOUSTICAL CEILINGS

PART 1 - GENERAL

1.1 SUMMARY

A. Section includes non-rated:

1. Suspended metal grid ceiling systems.

2. Acoustical ceiling panels:

3. Humidity resistant, washable lay-in food processing panels for Kitchen 105.

B. Related sections:

1. Section 09 54 12 -Suspended Acoustical Fiber Ceilings: Suspended ceiling for Vestibule 107.

2. Section 09 21 16 - Gypsum Board Assemblies: Suspended gypsum board ceilings.

1.2 REFERENCES

A. ASTM C635 - Metal Suspension Systems for Acoustical Tile and Lay-in Panel Ceilings.

B. ASTM C636 - Installation of Metal Ceiling Suspension Systems for Acoustical Tile and Lay-in Panels.

C. ASTM E580 - Practice for Application of Ceiling Suspension Systems for Acoustical Tile and Lay-in Panels in Areas Requiring Seismic Restraint.

D. ASTM E1264 - Classification of Acoustical Ceiling Products.

1.3 SUBMITTALS

A. Submit in accordance with Section 01 33 00 - Submittal Procedures:

1. Product data.

2. Samples:

a. 6 by 6 inch minimum sample of each panel type.

b. 2 inch long sections of suspension system main runner, cross runner, and edge trim.

3. Shop drawings showing grid and panel layout and installation details for:

a. Intersection with adjacent walls and other vertical elements.

b. Lateral bracing.

c. Other special conditions.

4. Manufacturer's installation instructions.

1.4 QUALITY ASSURANCE

A. Ceiling suspension system shall be designed and installed to support live, dead, and seismic loads for Project location and to comply with ICC IBC.

1.5 EXTRA MATERIALS

A. Provide in accordance with Section 01 78 00 - Closeout Submittals:

1. 20 of each type of ceiling panel.

PART 2 - PRODUCTS

2.1 ACCEPTABLE MANUFACTURERS

A. Armstrong World Industries, Inc., Lancaster, Pennsylvania; 800-233-3823.

B. USG Interiors, Chicago, Illinois; 800-874-4968; www.USG.com.

C. Requests to use equivalent products of other manufacturers shall be submitted in accordance with Section 01 25 13 - Product Substitution Procedures.

2.2 SUSPENSION SYSTEMS

A. Type: ASTM C635 non-rated, intermediate duty, exposed tee grid fabricated from cold rolled steel with hot dipped galvanized coating:

1. Type A - General Use Grid: Prelude XL as manufactured by Armstrong World Industries.

2. Type B - High Humidity Use Grid: Corrosion resistant grid conforming to ASTM C635 for Severe Environmental Performance and USDA approved for food processing use; Prelude Plus XL as manufactured by Armstrong World Industries.

B. Sizes: 1-1/2 inch main tees and 1-1/2 inch cross tees with 15/16 inch exposed grid face.

C. Finish: Baked polyester paint.

D. Colors: As selected by Architect from manufacturer's full range.

E. Accessories:

1. Hold down clips, splices, and other attachment accessories as required for complete installation.

2. Wall molding: Angle type to match grid.

3. Hanger wire: 12 gage minimum.

F. Maximum deflection of installed system: 1/360 of span.

2.3 ACOUSTICAL PANELS

A. Types A: ASTM E 1264 Type IV Form 2, Pattern E; non-directional finish on scratch-resistant surface, sag and mold resistant panel with excellent sound absorption; Ultima No. 1911 and No. 1914 as manufactured by Armstrong World Industries.

1. Sizes:

   a. 1911: 24 by 24 inches.

   b. 1914: 24 by 48 inches.

2. Thickness: 3/4 inch.

3. Edge: Beveled tegular.

4. Composition: Wet-formed, mineral fiber with acoustically transparent membrane.

5. Average light reflectance: 90 percent.

6. NRC ratings: 0.70.

7. CAC rating: 35.

8. Surface finish: Factory applied acrylic latex paint.

9. Color: White.

10. Recycled content: 77 percent.

2.4 CEILING PANELS FOR FOOD PROCESSING AREAS

A. Type B: ASTM E1264, Type IV, Form 2, Pattern E, humidity and sag resistant, washable, mold resistant panel; Health Zone Ultima No. 1935 as manufactured by Armstrong World Industries.

B. Compliance:

1. USDA/FSIS Guidelines for use in food processing areas.

2. ISO Class 100 Clean Room Requirements.

3. FGI Guidelines for acoustics and cleanability in general healthcare spaces.

C. Size: 24 by 24 inches.

D. Thickness: 3/4 inch.

E. Edge: Square.

F. Composition: Wet-formed mineral fiber with acoustically transparent water-resistant membrane.

G. Average light reflectance: 86 percent.

H. NRC rating: 0.70.

I. CAC rating: 35.

J. Flame spread: Class A.

K. Surface finish: Latex paint that can be cleaned with water or mild detergent.

L. Color: White.

PART 3 - EXECUTION

3.1 PREPARATION

A. Coordinate provision and layout of acoustical panel ceilings with work of other sections to ensure compatibility of systems, accuracy of layout, and elimination of conflicts:

1. Section 09 21 16 - Gypsum Board Assemblies: Suspended gypsum board ceiling used in combination with acoustical panel ceilings.

2. Division 21 - Fire Suppression: Sprinkler heads installed in acoustical panel ceilings.

3. Division 23 - Heating, Ventilating, and Air Conditioning (HVAC): Above ceiling ductwork and ceiling diffusers.

4. Division 26 - Electrical: Recessed and pendant supported light fixtures installed in acoustical ceiling panels.

B. Do not install acoustical ceilings until building is enclosed, minimum temperature is 60 degrees F, dust generating activities have terminated, and overhead work is completed, tested, and approved.

C. Verify that layout of hangers will not interfere with other work.

3.2 SUSPENSION SYSTEM INSTALLATION

A. Install grid systems in accordance with ASTM C636 and ASTM E580 as indicated on Drawings and reviewed shop drawings.

B. Install Type B - Corrosion Resistant Grid in Kitchen, Washing Area, and other high humidity areas indicated on Drawings.

C. Install Type A - Standard Grid in all other locations.

D. Coordinate location of hangers with other work.

E. Hang system independent of walls, columns, ducts, pipes, and conduit. Where carrying members are spliced, avoid visible displacement of face plane of adjacent members.

F. Layout: Locate grid system on room axis according to Reflected Ceiling Plan.

G. Where ducts or other equipment prevent regular spacing of hangers, reinforce the nearest affected hangers and related grid members.

H. Loading:

1. Do not support other building components on main runners and cross tees if weight causes total dead load to exceed deflection capability.

2. Support light fixture loads by supplementary hangers.

3. Do not eccentrically load system or produce rotation of runners.

I. Edge molding: Install at intersection of ceiling and vertical surfaces, using longest practical lengths. Miter corners. Provide edge moldings at junctions with other interruptions.

3.3 PANEL INSTALLATION

A. Schedule: Install types and sizes of acoustical panel in locations indicated on Reflecting Ceiling Plans and Finish Schedule in Drawings.

1. Install Type B - Food Processing panels in Kitchen.

2. Install Type A - Standard acoustical panels in all other locations as indicated on Reflected Ceiling Plan..

B. Fit acoustical panels in place, free from damaged edges or other defects. Install level, in uniform plane, and free from twist, warp, and dents.

C. Lay directional patterned units with fissures running in one direction.

D. Cut panels to fit irregular grid and perimeter edge trim. For Type B and C panels, field rabbet panel edge by double cutting to match tegular edge. Paint exposed cut edges to match panel finish.

E. Install hold-down clips to retain panels tight to grid system within 20 feet of exterior doors.

3.4 TOLERANCES

A. Variation from flat and level surface: 1/8 inch in 10 feet.

3.5 CLEANING

A. Vacuum or brush grid and panels to remove dust and loose dirt.

B. Clean grid and panels of all marks, smudges, and clinging dirt with moist cloth and mild soap.

C. Replace scratched sections of grid and heavily soiled or stained panels.

D. Remove cut sections of grid, panel scraps, wire clippings, and all other debris from space above ceiling.

END OF SECTION

SECTION 09 65 10

RESILIENT BASE AND ACCESSORIES

PART 1 - GENERAL

1.1 SUMMARY

A. Section includes: Rubber floor base and vinyl edge strips.

B. Related sections:

1. Section 09 6516 - Sheet Vinyl Flooring.
2. Section 09 65 19 - Vinyl Tile Flooring.
3. Section 09 68 13 - Carpet Tile.

1.2 REFERENCES

A. ASTM E84 - Surface Burning Characteristics of Building Materials.

B. ASTM E648 - Test Method for Critical Radiant Flux of Floor Covering Systems Using a Radiant Heat Energy Source.

C. ASTM E662 - Test Method for Specific Optical Density of Smoke Generated by Solid Materials.

D. FS SS-W-40 - Wall Base: Rubber and Vinyl Plastic.

1.3 SUBMITTALS

A. Submit in accordance with Section 01 33 00 - Submittal Procedures:

1. Product data.
2. Sample: 4 inch minimum lengths of resilient base and vinyl edge strips in selected colors.
3. Manufacturer's installation instructions.

1.4 QUALITY ASSURANCE

A. Provide floor base, adhesive, and other products with low or zero volatile organic compound (VOC) content and containing no hazardous or carcinogenic ingredients.

B. Regulatory requirements: Comply with current applicable regulation of the Environmental Protection Agency (EPA) as related to volatile organic compound content of products.

C. Conform to applicable code for flame, fuel, and smoke rating requirements of resilient flooring in accordance with ASTM E84.

1.5 ENVIRONMENTAL REQUIREMENTS

A. Ventilation: Do not install adhesive-applied resilient flooring products in enclosed building spaces without adequate ventilation.

B. Maintain space to receive base at 65 degrees F minimum for 48 hours prior to, during, and 48 hours after installation.

C. Store materials for 48 hours prior to installation in area of installation to achieve temperature stability.

1.6 EXTRA MATERIALS

A. Provide in accordance with Section 01 78 00 - Closeout Submittals:

1. 10 linear feet of each type and color of rubber base.

B. Extra materials shall be from same manufacturing lot as materials installed.

PART 2 - PRODUCTS

2.1 ACCEPTABLE MANUFACTURERS

A. Wall base and edge strips:

1. Johnsonite, Middlefield, Ohio; 800-637-4995.

2. Roppe Corporation, Fostoria, Ohio; 800-537-9527.

B. Requests to use equivalent products of other manufacturers shall be submitted in accordance with Section 01 25 13 - Product Substitution Procedures. Architect reserves right to reject proposed substitutions on basis of color and pattern compatibility even though fabrication and materials are equivalent.

2.2 WALL BASE

A. Type: Extruded rubber, vulcanized.

B. Toe: Coved.

C. Height: 4 inches.

D. Thickness: 1/8 inch.

E. Color: As selected by Architect from manufacturer's standard range.

F. Provide in coils in order to minimize joints in field.

2.3 EDGE STRIPS

A. Material: Vinyl.

B. Color: As selected by Architect from manufacturer's standard range.

C. Types:

1. Adaptor strips for joints between adjacent floor finishes.

2. Edge guard (termination) strips for floor finishes.

3. Other edge strips as indicated or scheduled on Drawings and as required for smooth, safe terminations and transitions between various floor finishes.

2.4 ACCESSORIES

A. Primers: As recommended by floor material manufacturer.

B. Adhesive: Waterproof types as recommended by floor material manufacturer.

PART 3 - EXECUTION

3.1 PREPARATION

A. Verify that substrate surfaces are smooth, flat, and free from irregularities.

3.2 BASE INSTALLATION

A. Install straight and continuous in maximum possible lengths. Fit joints tight and vertical.

B. Corners:

1. Internal: Miter.

2. External: "V" cut back of base to 2/3 of its thickness and fold.

C. Scribe to fit doors and frames and other interruptions.

D. Install base on solid backing. Bond tight to wall.

E. Remove excess adhesive from floor, base, and wall.

3.3 EDGE STRIPS

A. Install edge strips at unprotected or exposed edges and at intersections between different floor finishes as indicated on Drawings and reviewed shop drawings.

B. Coordinate with installation of floor finishes specified in other sections.

C. Use maximum possible lengths.

END OF SECTION

SECTION 09 65 19

VINYL TILE FLOORING

PART 1 - GENERAL

1.1 SUMMARY

A. Section includes: Vinyl floor tile.

B. Related sections:

1. Section 09 65 16 - Sheet Vinyl Flooring.

2. Section 09 68 13 - Carpet Tile.

1.2 REFERENCES

A. ASTM E648 - Test Method for Critical Radiant Flux of Floor Covering Systems Using a Radiant Heat Energy Source.

B. ASTM E662 - Test Method for Specific Optical Density of Smoke Generated by Solid Materials.

C. ASTM F1700 - Solid Vinyl Tile.

D. ASTM F1869 - Moisture Vapor Emission Rate of Concrete Subfloor Using Anhydrous Calcium Chloride.

E. FS SS-W-40 - Wall Base: Rubber and Vinyl Plastic.

1.3 QUALITY ASSURANCE

A. Provide floor tile, base adhesive and other products with low or zero volatile organic compound (VOC) content and containing no hazardous or carcinogenic ingredients. Comply with current Environmental Protection Agency (EPA) regulations related to VOC content of products.

1.4 SUBMITTALS

A. Submit in accordance with Section 01 33 00 - Submittal Procedures:

1. Product data for vinyl tile, adhesives, and other accessories.

2. Shop drawings showing vinyl tile layout and other installation details.

3. Samples: Vinyl tile in selected colors.

4. Manufacturer's installation and maintenance instructions.

5. Copy of warranty required by Paragraph 1.6 for review byArchitect.

1.5 ENVIRONMENTAL REQUIREMENTS

A. Maintain space to receive flooring at 65 degrees F minimum for 48 hours prior to, during, and 48 hours after installation.

B. Store materials for 48 hours prior to installation in area of installation to achieve temperature stability.

1.6 WARRANTY

A. Provide in accordance with Section 01 78 00 - Closeout Submittals:

1. Manufacturer's 10 year materials and workmanship warranty for vinyl tile.

1.7 EXTRA MATERIALS

A. Provide in accordance with Section 01 78 00 - Closeout Submittals:

1. 10 square feet of each color and pattern of field floor tile used.

PART 2 - PRODUCTS

2.1 ACCEPTABLE MANUFACTURERS

A. Vinyl tile:

1. Armstrong World Industries, Inc., Lancaster, Pennsylvania; 800-233-3823; www.armstrong.com.

B. Requests to use equivalent products of other manufacturers shall be submitted in accordance with Section 01 2513 - Product Substitution Procedures. Architect reserves right to reject proposed substitutions on basis of color and pattern compatibility even though fabrication and materials are equivalent.

2.2 VINYL FLOOR TILE

A. Type: Vinyl tile complying with ASTM F1700, Class III, Type B - Embossed Surface; Luxury Solid Vinyl Tile Flooring as manufactured by Armstrong World Industries, Inc.

B. Size: 36 by 6 inches, 0.125 inch thick.

C. Construction: Layered construction consisting of tough, clear vinyl wear layer protecting high-fidelity print layer of solid vinyl backing.

1. Protected by UV-cured polyurethane finish.

2. Wear surface embossed with texture.

3. Colors are insoluble in water and resistant to cleaning agents and light.

D. Color and pattern: Natural Creations Mystix - Sideline Charcoal.

E. Fire resistance:

1. Critical radiant flux: Class 1 tested in accordance with ASTM E648.

2. Smoke density: Less than 450 tested in accordance with ASTM E662.

2.3 ACCESSORIES

A. Primers: As recommended by floor material manufacturer.

B. Adhesive: Waterproof types as recommended by floor material manufacturer.

PART 3 - EXECUTION

3.1 COORDINATION AND PREPARATION

A. Coordinate with installation of other floor and wall finishes::

1. Section 09 21 16 - Gypsum Board Assemblies: Metals stud and gypsum board partitions to receive rubber base.

2. Section 09 68 13 - Carpet Tile.

3. Section 09 91 00 - Painting.

B. Concrete substrates:

1. Coordinate provision of vinyl tile flooring with casting of concrete slabs specified in Section 03 30 00 - Cast-in Place Concrete to ensure curing compound has not been applied to slabs scheduled to receive resilient flooring. If curing compounds are required, obtain from curing compound manufacturer certification that compound is compatible with proposed flooring products and will not adversely affect bond of flooring.

2. Ensure that concrete is completely cured for 30 days minimum. Verify moisture content does not exceed 3 pounds per 1000 square feet in 24 hours when tested in accordance with ASTM F1869 using calcium chloride test.

3. Verify that concrete slab has neutral alkalinity.

C. Verify that substrate surfaces are smooth, flat, and free from irregularities. Maximum acceptable variation in any direction shall be 1/8 inch in 10 feet.

D. Fill low spots, cracks, joints, holes, and other defects, with floor filler. Apply, trowel, and float filler to leave smooth, flat, hard surface. Prohibit traffic until cured.

E. Vacuum floor surfaces immediately before installation.

3.2 GENERAL FLOORING INSTALLATION

A. Install in accordance with manufacturer's instructions and reviewed shop drawings.

B. Locate transitions to other floor coverings at doorways such that joint is concealed when door is closed.

C. Scribe flooring to walls, columns, cabinets, and other appurtenances to produce tight joints.

D. Spread only enough adhesive to permit installation of flooring materials before initial set.

E. Set flooring in place; press with heavy roller to attain full adhesion.

3.3 VINYL TILE

A. Install vinyl tile in areas designated in Room Finish Schedule.

B. Mix tile from cartons to ensure shade variations are consistent.

C. Install tile with pattern indicated on reviewed shop drawings.

D. Layout tile pattern from center of room such that tiles at perimeter are wider than 6 inches.

3.4 CLEANING

A. Prohibit traffic on floor for 48 hours after installation.

B. Remove excess adhesive from floor, base, and wall.

C. After floors have set sufficiently to properly bond, wash with neutral cleaner, wax, and buff thoroughly.

D. Provide non-staining paper pathway taped to resilient flooring as protection from construction traffic.

END OF SECTION

SECTION 09 68 13

VESTIBULE CARPET TILE

PART 1 - GENERAL

1.1 SUMMARY

A. Section includes: Walk-off carpet tile and adhesive for Vestibule 107..

B. Related sections:

1. Section 09 65 10 - Resilient Base and Accessories: Rubber base and vinyl edge strips.

1.2 REFERENCES

A. ASTM D2859 - Test Method for Flammability of Finished Textile Floor Covering Materials.

B. ASTM E648 - Test Method for Critical Radiant Flux of Floor Covering Systems Using a Radiant Heat Energy Source.

1.3 SUBMITTALS

A. Submit in accordance with Section 01 33 00 - Submittal Procedures:

1. Product data.

2. Shop drawings showing layout of carpet tile and details for juncture with other floor surfaces.

3. Samples.

4. Manufacturer's installation and maintenance instructions.

5. Copy of warranty required by Paragraph 1.6 for review by Architect.

1.4 ENVIRONMENTAL REQUIREMENTS

A. Do not install carpet tile until painting and ceiling installation is complete and overhead systems have been installed, tested, and approved.

B. Ventilation: Do not install flooring in enclosed building spaces without adequate ventilation. Provide ventilation to remove volatile organic compound (VOC) outgasses emitting from sheet flooring and adhesive during storage, installation, and after installation as required to minimize contamination of building interior spaces.

C. Store materials for 24 hours minimum in area of installation to achieve temperature stability.

D. Maintain temperature of 60 degrees F minimum 24 hours before, during, and 24 hours after installation.

E. Ensure that relative humidity is at approximate level at which space will be maintained.

1.5 QUALITY ASSURANCE

A. Provide flooring, adhesive, and other products with low or zero volatile organic compound (VOC) content and containing no hazardous or carcinogenic ingredients.

B. Regulatory requirements: Comply with current applicable regulation of the Environmental Protection Agency (EPA) as related to volatile organic compound content of products.

1.6 WARRANTY

A. Provide in accordance with Section 01 78 00 - Closeout Submittals: manufacturer's 20 year warranty to cover:

1. Wear: Surface fiber wear shall not be more than 10 percent by weight in 20 years. Warranty shall not require use of chair pads.

2. Static: Static generation at less than 3.0 Kv at 70 degrees F, and 20 percent R.H. for not less than 20 years.

3. No delamination for a period not less than 20 years.

4. No edge ravel for a period not less than 20 years.

5. Dimensional instability: No shrinkage, curling and doming which adversely affect the ability of the tile to lay flat for a period not less than 20 years.

6. Mold warranty.

1.7 EXTRA MATERIALS

A. Provide in accordance with Section 01 78 00 - Closeout Submittals:

1. 20 carpet tiles each type, color, and pattern used.

PART 2 - PRODUCTS

2.1 ACCEPTABLE MANUFACTURERS

A. InterfaceFLOR, LaGrange, Georgia; 800-336-0225; www.interfaceflor.com.

B. Requests to use equivalent products of other manufacturers shall be submitted in accordance with Section 01 25 13 - Product Substitution Procedures. Architect reserves right to reject proposed substitutions on basis of color compatibility even though fabrication and materials are equivalent.

2.2 CARPET TILE

A. Type: Tufted, textured, loop pile, modular carpet tile; Step Repeat as manufactured by InterfaceFLOR.

B. Attributes:

1. Construction type: Tufted textured loop.

2. Face fiber: 100 percent premium branded Invista Antron Lumena/Legacy.

3. Modification ratio: 2.5 maximum.
4. Dye method: 66 percent solution dyed, 34 percent yarn dyed.
5. Pile height: 0.16 inch.
6. Soil/stain block treatment: Protekt 2.
7. Antimicrobial: Intersept Broad Spectrum.
8. Primary backing: Non woven.
9. Secondary backing: GlasBac or Glasbac RE fiberglass reinforced, composite.
10. Yarn weight: 18 ounces per square yard.
11. Gage: ½ inch.
12. Stitches per inch: 8.
13. Pile thickness: 0.090 inch.
14. Pile density (UM44D): 6545.
15. Total thickness: 0.275 inch.

C. Performance standards:

1. Carpet flammability:
   a. Pill test (ASTM D2859 or CPSC FF-1-70): Passes.
   b. Radiant panel test (ASTM E648): 0.45 watts/cm2, Class 1 minimum.
   c. Smoke density (ASTM E662): 450 Flaming Mode maximum.
2. Dimensional stability (Aachen Method Din 54318): 0.10 percent change maximum.
3. Static generation at 70 degrees F (AATCC 134 w/neolite): 3.0 kV at 20 percent R.H. maximum.
4. Lightfastness (AATCC 16E): 4.0 after 60 hours.
5. Crocking (AATCC 165): 4.0 wet, dry.
6. Nitrogen dioxide (AATCC 164): 4.0.
7. Ozone fade (AATCC 109): 4.0.
8. Antimicrobial (AATCC 174, Part II): 95.0 percent reduction minimum.
9. Fungicidal (AATCC 174, Part III): No growth.

10. Soil/stain protection (AATCC 175-1991): 8.0 on the Red 40 Stain Scale minimum.

11. Appearance retention (CRI TM101): Severe Use.

D. All carpet tile styles shall have mergeable dye lots (same color manufactured at different times blending with no distinguishable variation) and require no more than 1 percent optional attic stock.

E. Specified carpet must have Climate Neutral certification, ensuring that all greenhouse gas emissions associated with the life cycle of the product have been offset.

F. Carpet tile should contain a minimum of 40 percent total recycled content.

G. Antimicrobial Preservative:

1. The preservative must be registered with the EPA and have a stamped DPA Technical Bulletin stating it is approved for use in carpets.

2. The preservative should be incorporated into the primary backing of the product during the manufacturing process, not topically applied to the carpet fibers or the backing.

3. The preservative must not be metallic or halogen based (no zinc, copper, tin, chlorine, bromine, etc.) and have low water solubility (30 ppm or less) for good durability.

4. The preservative should be low in toxicity (not less than an oral LD50 of 2.4g/Kg), show no mold or bacterial growth when tested per the ASTM E2471 Standard Test Method, and meet the AATCC method 174 parts II and III.

5. The antimicrobial treated carpet must maintain, for the warranted life of the carpet, a minimum of 90% reduction of the microorganisms and be environmentally responsible, i.e., biodegradable and not toxic to non-target species.

2.3 CARPET TILE FOR ENTRIES

A. Type A: Tufted, textured, loop pile, modular carpet tile; Step Repeat, Non-Directional, Mixture of 75 percent 7187 Olive and 25 percent 7187 Black as manufactured by InterfaceFLOR.

B. Size: 50 by 50 centimeters.

C. Attributes:

1. Construction type: Tufted textured loop.

2. Yarn system: Type 6.6 Nylon.

3. Color system: 100 percent solution dyed.

4. Pile thickness: 0.15 inch.

5. Pile density: 6,720.

6. Soil/stain block treatment: Protekt 2.

7. Preservative protection: Intersept.

8. Backing system: GlasBac.

9. Total recycled content: 42 percent.

2.4 ENVIRONMENTAL IMPACT AND MEASUREMENTS

A. Carpet shall contain the following percentages of recycled material:

1. Post consumer: 17 percent.

2. Pre-consumer: 44 percent.

B. Carpet shall contain fiber made from polylactic acid (PLA), a rapidly renewable bio-based fiber derived from corn.

C. Modular carpet tile manufacturer must meet the following criteria:

1. Greenhouse gas emissions from purchased electricity and on-site combustion attributable to the manufacturing process (including outsourcing) must not exceed 1 lb of carbon dioxide per square meter (0.83 lbs per square yard),and must be offset and certified by a third party.

2. Non-renewable energy per unit of production during manufacturing process (including outsourcing) must not exceed 15,000 BTU per square meter (12,542 per square yard).

3. Solid waste generated in the manufacturing process (including outsourcing), regardless of disposal method, must not exceed 0.5 lbs per square meter (0.42 lbs per square yard).

4. Water intake, for manufacturing purposes, during the manufacturing process (including outsourcing) must not exceed 1 gallon per square meter (0.83 gallons per square yard).

5. Must meet all federal, state, and local environmental laws, including laws governing air emissions, waste water treatment, and solid waste disposal/treatment.

6. Manufacturer should voluntarily disclose all environmental citations, including date and description of incident.

7. Manufacturer should voluntarily state total pounds of toxic pollutants released into the environment in the most recently submitted Toxics Release Inventory (SARA 313) report.

D. Carpet recycling: Modular carpet tile manufacturer must meet the following criteria:

1. Must have a closed loop “takeback/recycling” program that specifically allows for reclamation of each of the product types produced in manufacturing history, nylon face and backing.

2.5 ACCESSORIES

A. Floor filler: White premix latex type as recommended by manufacturer to be compatible with adhesive and carpet tile.

PART 3 - EXECUTION

3.1 PREPARATION

A. Coordinate provision of carpet tile with casting of concrete slabs specified in Section 03 30 00 - Cast-in-Place Concrete to ensure curing compound has not been applied to slabs scheduled to receive resilient flooring. If curing compounds are required, obtain from curing compound manufacturer certification that compound is compatible with proposed flooring products and will not adversely affect bond of flooring.

1. Ensure that concrete is completely cured for 30 days minimum. Verify moisture content does not exceed 3 pounds per 1000 square feet in 24 hours when tested in accordance with ASTM F1869 using calcium chloride test.

2. Verify that concrete slab has neutral alkalinity.

B. Verify that substrate surfaces are smooth, flat, and free from irregularities. Maximum acceptable variation in any direction shall be 1/8 inch in 10 feet.

C. Fill low spots, cracks, joints, holes, and other defects, with floor filler. Apply, trowel, and float filler to leave smooth, flat, hard surface. Prohibit traffic until cured.

D. Vacuum floor surfaces immediately before installation.

3.2 INSTALLATION

A. Install in accordance with manufacturer's instructions in Vestibule 107 and other areas designated on Drawings.

B. Cut carpet tile clean. Fit tiles tight to intersections with vertical surfaces without gaps.

C. Integrate and blend carpet from different cartons to ensure minimal variation in color match.

D. Lay carpet tile in basket weave pattern with tile direction alternating between tiles and set parallel to building lines.

E. Butt edges together tight.

F. Remove air pockets and ridges and slightly stretch. Anchor securely around projections and contours.

3.3 EDGE STRIP INSTALLATION

A. Install full length edge strips as specified in Section 09 65 10 - Resilient Base and Accessories where carpet terminates at other floor coverings and at openings.

3.4 COMPLETION

A. Clip cut edges to remove pulled and loose yarns.

B. Vacuum immediately after installation.

C. Remove excess adhesive without damage from floor, base, and wall surfaces.

D. Provide heavy, non-staining paper or plastic walkway over carpet. Maintain until work in area has been completed and accepted.

E. Vacuum prior to final acceptance.

END OF SECTION

SECTION 09 76 10

FIBER REINFORCED PLASTIC COATED PANELS

PART 1 - GENERAL

1.1 SUMMARY

A. Section includes: Fiberglass reinforced plastic (FRP) coated wall panels, moldings, fasteners, and other accessories for mop sink wainscot.

B. Related sections:

1. Section 09 21 16 - Gypsum Board Assemblies: Gypsum board and metal stud partitions to receive plastic coated wall panels.

1.2 REFERENCES

A. ASTM D3029 - Impact Resistance of Flat Rigid Plastic Specimens by Means of Tup (Falling Weight).

B. ASTM E84 - Surface Burning Characteristic of Building Materials.

1.3 SUBMITTALS

A. Provide in accordance with Section 01 33 00 - Submittal Procedures:

1. Product data.

2. Shop drawings showing layout of panels, dimensions, locations of joints, and attachment and trim details.

3. Standard finishes for selection by Architect.

4. Samples of panel, trim, and fasteners.

5. Installation instructions.

1.4 ENVIRONMENTAL REQUIREMENTS

A. Protect adhesives from freezing or overheating in accordance with manufacturer's instructions.

B. Do not install fiber reinforced plastic coated panels until wet construction work is completed and air temperature and moisture content has stabilized.

C. Maintain room temperature at 65 degrees F for two days prior to delivery of materials, during installation, and after installation.

D. Do not install adhesives in closed, unventilated rooms.

PART 2 - PRODUCTS

2.1 ACCEPTABLE MANUFACTURERS

A. Crane Composites, Inc.; Channahon, Illinois; 800-435-0080; www.cranecomposites.com.

B. Marlite, Dover, Ohio; 330-343-6621; www.marlite.com.

C. Nudo Products, Inc., Springfield, Illinois; 800-826-4132; www.nudo.com.

D. Requests to use equivalent products of other manufacturers shall be submitted in accordance with Section 01 25 13 - Product Substitution Procedures.

2.2 WALL PANELS

A. Type: Fiberglass reinforced plastic wall panels; Fire-X Glasbord as manufactured by Crane Composites, Inc.

B. Size: 0.09 inch thick by 4 feet wide by length to provide full height wall panels.

C. Flame spread in accordance with ASTM E84: Class A, less than 25.

D. Smoke development in accordance with ASTM E84: Less than 450.

E. Impact resistance: 22 inch-pounds tested in accordance with ASTM D3029.

F. Barcol hardness: 55 tested in accordance with ASTM D3209.

G. Abrasion resistance: Less than 0.038 percent weight loss after 25 cycle Taber Abrasion Test.

H. Surface: Embossed.

I. Color: Selected by Architect from manufacturer's standard range.

2.3 ACCESSORIES

A. Fasteners: One piece nylon rivet suitable for attachment to gypsum board.

B. Moldings: Extruded PVC moldings provided in maximum possible lengths. Provide shapes for panel divisions, inside and outside corners, and edge caps.

C. Sealant: Silicone as specified in Section 07 92 00 - Joint Sealants and approved by manufacturer for this application.

PART 3 - EXECUTION

3.1 PREPARATION

A. Verify that gypsum board surfaces to receive wall panel system are even, sound, and free from defects detrimental to installation.

B. Verify that plumbing, mechanical, and electrical services within walls have been installed, tested, and approved.

3.2 WALL PANEL INSTALLATION

A. Install panels in accordance with manufacturer's instructions on all walls of Janitor Closet.

B. Install 48 inch high wainscot around mop sink in Janitor's Closet. Fasten with nylon rivets.

C. Neatly cut moldings and trim for joints and around perimeter of exposed panel edges.

D. Apply sealant to interior edge of trim prior to placing panel in trim.

E. Neatly drill or cut panels for penetrations. Seal openings. Provide metal escutcheon plates for pipes penetrating wall panels.

F. Remove excess sealant from panels and moldings. Sealant should not be visible in completed system.

END OF SECTION

SECTION 09 77 70

STAINLESS STEEL WALL FINISH

PART 1 - GENERAL

1.1 SUMMARY

A. Section includes: Stainless steel wall finish adhesive applied behind range cooktop in Classroom B 117.

B. Related sections:

1. Section 09 21 16 - Gypsum Board Assemblies: Gypsum board substrate to receive stainless steel finish.

1.2 REFERENCES

A. ASTM A167 - Stainless and Heat-Resisting Chromium-Nickel Steel Plate, Sheet and Strip.

1.3 SUBMITTALS

A. Provide in accordance with Section 01 33 00 - Submittal Procedures:

1. Product data.

2. Samples of stainless steel moldings.

3. Installation instructions.

1.4 QUALITY ASSURANCE

A. Wall finish system shall be USDA approved for sanitary food processing plants.

PART 2 - PRODUCTS

2.1 MATERIALS

A. Stainless steel sheet: ASTM A167 Type 304, commercial grade, No. 4 finish, 22 gage minimum.

1. Size: 48 inches wide by height to span floor to ceiling.

B. Moldings: Provide stainless steel H shaped splines and other edge trim as required for complete installation.

C. Fasteners: Stainless.

D. Adhesive: Silicone type suitable for adhering stainless steel and other nonporous materials.

E. Sealant: Silicone as specified in Section 07 92 00 - Joint Sealants.

PART 3 - EXECUTION

3.1 INSPECTION AND COORDINATION

A. Verify that framing to receive wall panel system is even, sound, and free from defects detrimental to installation.

B. Verify that plumbing, mechanical, and electrical services within walls have been installed, tested, and approved.

C. Coordinate installation of stainless steel panels with:

1. Application of adjacent wall finish specified in Section 09 91 00 - Painting.

2. Installation of food service equipment specified in Section 11 31 10 - Classroom Appliances.

3.2 INSTALLATION

A. Adhesive install stainless panels to gypsum board substrate in accordance with manufacturer's instructions. Install behind equipment and beneath cooking hood.

B. Install panels vertically with H splines between adjacent edges. Allow for expansion and contraction.

C. Neatly cut moldings and trim for joints and around perimeter of exposed panel edges.

D. Apply sealant to interior edge of trim prior to placing panel in trim.

E. Neatly drill or cut panels for penetrations. Seal openings and provide closures.

F. Remove excess sealant from panels and moldings. Sealant should not be visible in completed system.

END OF SECTION

SECTION 09 91 00

PAINTING

PART 1 - GENERAL

1.1 SUMMARY

A. Section includes: Field painting and finishing of exterior and interior surfaces. Includes surface preparation.

B. Related sections:

1. Section 03 35 30 - Concrete Floor Finishes: Abrasion resistant clear coating for interior concrete slabs.

1.2 DEFINITIONS

A. Sheen: Measurement of light reflectance of painted surface from beam of light at angle ranging from 60 to 85 degrees tested in accordance with ASTM D523.

1. Flat: 0 to 9 percent.

2. Low sheen: 10 to 25 percent.

3. Eggshell: 26 to 40 percent.

4. Semi-gloss: 41 to 69 percent.

5. Gloss: 70 to 89 percent.

6. High gloss: Over 90 percent.

1.3 SUBMITTALS

A. Submit in accordance with Section 01 33 00 - Submittal Procedures:

1. List of proposed materials, product data, and application instructions.

2. Manufacturer's standard color chips for selections by Architect.

1.4 REGULATORY REQUIREMENTS

A. Comply with current applicable regulations of the Environmental Protection Agency (EPA).

B. Products provided under this Section shall comply with Green Seal Standards for VOC (volatile organic compounds) emissions. Paints shall not contain ethylene glycol. Paints with the exception of primers and specialty products as functionally required for this Project and specified in Paragraph 3.8 shall have the following maximum VOC emissions:

1. Interior coatings:

a. Flat: 50 grams per liter.

b. Non-flat: 150 grams per liter.

2. Exterior coatings:

   a. Flat: 100 grams per liter.

   b. Non-flat: 200 grams per liter.

1.5 PRODUCT HANDLING

A. Deliver materials to site in original, unopened packages and containers bearing manufacturer's label with material type, name, code, color number, contents by volume of constituents, and instructions for mixing, thinning, and applying.

B. Store materials in well ventilated place. Protect floors and walls of store room. Store at minimum temperature of 45 degrees F and maximum of 90 degrees F.

C. Take precautionary measures to prevent fire hazards and spontaneous combustion.

1.6 ENVIRONMENTAL CONDITIONS

A. Do not apply exterior finishes during rain, snow, or when relative humidity is above 50 percent.

B. Minimum application temperature for latex paints: 50 degrees F.

C. Minimum application temperature for solvent thinned finishes: 65 degrees F.

D. Provide adequate lighting for performing painting operations.

1.7 EXTRA MATERIALS

A. Provide in accordance with Section 01 78 00 - Closeout Submittals:

   1. 1 gallon of each color and surface sheen used. Label with color, texture, and locations in addition to the manufacturer's label and color number.

PART 2 - PRODUCTS

2.1 ACCEPTABLE MANUFACTURERS

A. Benjamin Moore Company, Montvale, New Jersey; 800-344-0400.

B. Dunn Edwards Paints, Albuquerque, New Mexico; 505-877-5050.

C. Kwal-Howells, Denver, Colorado; 800-383-8406.

D. Sherwin Williams Company; Cleveland, Ohio; 800-321-8194.

E. Requests to use equivalent products of other manufacturers shall be submitted in accordance with Section 01 25 13 - Product Substitution Procedures.

2.2 GENERAL REQUIREMENTS

A. All paint materials shall be compatible in use; finish coats shall be compatible with prime coats.

B. Thinners shall be only those recommended for that purpose by manufacturer of materials to be thinned.

PART 3 - EXECUTION

3.1 GENERAL PREPARATION

A. Examine surfaces to be finished. Report any condition that may affect proper application.

B. Correct minor defects and clean surfaces to be finished.

C. Remove electrical plates, hardware, trim, and other fittings prior to preparing surfaces and finishing.

D. Shellac and seal marks which may bleed through surface finishes.

3.2 PREPARATION OF NEW SURFACES

A. Uncoated steel: Remove grease, scale, dirt, and rust. Clean with solvent. Treat with phosphoric acid solution.

B. Shop primed steel: Sand and scrape to remove loose primer and rust. Clean surfaces with solvent. Prime bare steel surfaces.

C. Galvanized surfaces: Remove surface contamination and oils and wash with solvent. Apply coat of etching primer.

D. Wood: Remove dust, grit, and foreign matter. Seal knots, pitch streaks, and sappy sections with sealer. Fill nail holes and cracks and sand.

E. Gypsum board: Latex fill minor defects. Spot prime defects after repair.

3.3 PROTECTION

A. Protect elements adjacent to surfaces to be painted from damage and disfiguration.

B. Furnish drop cloths, shields, masking, and protective methods to prevent spray and drippings from disfiguring other surfaces.

3.4 APPLICATION

A. Apply products in accordance with manufacturer's instructions.

B. Do not apply finishes to surfaces that are wet.

C. Apply each coat to uniform finish.

D. Sand lightly between coats to achieve required finish.

E. Allow applied coat to dry before next coat is applied.

F. Do not paint over code required labels or equipment identification markings and nomenclature plates. Replace items painted accidently.

G. Replace electrical plates, hardware, trim, and fittings when painted surfaces are dry.

H. Painted wood: Remove dust, grit, and foreign matter. Seal knots, pitch streaks, and sappy sections with sealer. Fill nail holes and cracks and sand.

3.5 PAINTING CEILING/ROOF SPACE COMPONENTS

A. In building areas without suspended ceilings and where roof structure will be exposed to view, field paint these components:

1. Steel joist, beams, and other structural framing.

2. Exposed to view steel roof deck except roof deck with factory applied paint finish.

3. Brackets, struts, hangers, wires, bracing, and other components used to attach and suspend ceiling/roof space components.

4. Piping, ductwork, grilles, diffusers, conduit, wire ways, electrical enclosures and boxes and other ceiling mounted components.

B. Colors: As designated by Architect.

C. Ceiling/roof space components not to be field painted:

1. Smoke detectors.

2. Light fixtures.

3. Fire suppression sprinkler heads.

4. Ceiling mounted mechanical and electrical pre-finished components.

5. Items with identifying labels required for code compliance.

D. Mask, cover, bag, or otherwise protect components listed in Paragraph 3.5.C from ceiling/roof space painting operations.

E. Coordinate painting of ceiling/roof space with installation of attached and suspended components in accordance with Section 01 31 00 - Project Management and Coordination.

3.6 FINISHING MECHANICAL AND ELECTRICAL EQUIPMENT

A. In all finished areas, prime and paint insulated and exposed pipes, conduit, boxes, insulated and exposed ducts, hangers, brackets, and supports. Unless otherwise scheduled, paint to match color of wall. Do not paint prefinished items or items in concealed or inaccessible spaces.

B. Paint shop primed equipment. Do not paint pre-finished or factory painted surfaces; aluminum, stainless steel, bronze, brass, and plastic surfaces; and door hardware.

C. Paint both sides and edges of plywood for electrical backboards before installation of equipment.

3.7 CLEANING

A. As work proceeds, promptly remove paint where spilled, splashed, and splattered.

B. During progress of work, maintain premises free of unnecessary accumulation of tools, equipment, surplus materials, and debris.

C. Collect cloths, waste, and other material which may constitute fire hazard; place in closed metal containers; and remove daily from site.

3.8 SCHEDULE

A. Exterior surfaces:

1. Asphalt and concrete paving, traffic, and parking markings:

   a. One coat flat, waterborne paint; Vin-L-Stripe as manufactured by Dunn Edwards Paints.

2. Unprimed steel designated to be painted:

   a. One coat: Alkyd, corrosion inhibitive primer; Bloc-Rust No. BRPR00-1-RO as manufactured by Dunn Edwards Paints.

   b. Two coats: Waterborne acrylic, semi-gloss enamel; Spartashield No. SSHL50-0 as manufactured by Dunn Edwards Paints.

3. Primed steel designated to be painted:

   a. Touch up with alkyd, red oxide, corrosion inhibitive primer; Bloc-Rust No. BRPR00-1-RO as manufactured by Dunn Edwards Paints.

   b. Two coats: Waterborne acrylic, semi-gloss enamel; Spartashield No. SSHL50-0 as manufactured by Dunn Edwards Paints.

4. Steel, galvanized:

   a. One coat: White alkyd, fast-drying primer for aluminum and galvanized surfaces; Galv-Alum No. GAPR00-WH as manufactured by Dunn Edwards Paints.

   b. Two coats: Waterborne acrylic, semi-gloss enamel; Spartashield No. SSHL50-0 as manufactured by Dunn Edwards Paints.

B. Interior surfaces:

1. Unprimed steel designated to be painted:

   a. One coat: Alkyd, corrosion inhibitive primer; Bloc-Rust No. BRPR00-1-RO as manufactured by Dunn Edwards Paints.

   b. Two coats: Waterborne acrylic, semi-gloss enamel; Spartawall No. SWLL50-0 as manufactured by Dunn Edwards Paints.

2. Primed steel designated to be painted:

   a. Touch up with alkyd, red oxide, corrosion inhibitive primer; Bloc-Rust No. BRPR00-1-RO as manufactured by Dunn Edwards Paints.

   b. Two coats: Waterborne acrylic, semi-gloss enamel; Spartawall No. SWLL50-0 as manufactured by Dunn Edwards Paints.

3. Gypsum board:

   a. One coat primer: Waterborne, acrylic, low sheen paint; Spartawall No. SWLL40-0 as manufactured by Dunn Edwards Paints.

   b. Apply texture as specified in Section 09 21 16 - Gypsum Board Assemblies.

   c. Two coats: Waterborne acrylic, low sheen paint; Spartawall No. SWLL50-0 as manufactured by Dunn Edwards Paints.

4. Gypsum board epoxy paint finish for Toilets:

   a. One coat applied prior to application of texture: Waterborne, gloss, epoxy thinned 10 to 20 percent; Carboline No. CBL-ST555L401 as manufactured by Dunn Edwards Paints.

   b. Apply texture as specified in Section 09 21 16 - Gypsum Board Assemblies.

   c. Two coats: Waterborne, gloss, epoxy; Carboline No. CBL-ST555L401 as manufactured by Dunn Edwards Paints.

5. Wood, transparent finish:

   a. One coat: Wiping tung oil stain; Min-Wax as provided by Dunn Edwards Paints.

   b. One coat: Acrylic sanding sealer; Quick 15 Satin Varnish No. ZIN-07001 as provided by Dunn Edwards Paints.

6. Wood, opaque finish:

   a. One coat: Acrylic copolymer; Latex Undercoater Prep-Seal No. W6324-00 as manufactured by Dunn Edwards Paints.

   b. Two coats: Waterborne acrylic, semi-gloss enamel; Spartawall No. SWLL50-0 as manufactured by Dunn Edwards Paints.

END OF SECTION

SECTION 10 14 00

SIGNAGE

PART 1 - GENERAL

1.1 SUMMARY

A. Section includes:

1. Plastic room signs.
2. Dedication plaque.
3. Metal accessible/handicap parking, and traffic signs.

B. Related sections:

1. Section 32 17 23.13 - Painted Pavement Markings: Asphalt and concrete paving parking markings.

1.2 REFERENCES

A. ANSI A117.7 - Specifications for Making Buildings and Facilities Accessible to and Usable by Physically Handicapped People.

1.3 QUALITY ASSURANCE

A. Signs shall be designed and installed for use by handicapped persons in accordance with ANSI A117.7.

1.4 SUBMITTALS

A. Provide in accordance with 01 33 00 - Submittal Procedures:

1. Product data.
2. Shop drawings listing identifying devices, text, lettering style, dimensions, and methods and details of attachment.
3. Samples illustrating available types and colors for selection by Architect.

PART 2 - PRODUCTS

2.1 ACCEPTABLE MANUFACTURERS

A. A.R.K. Ramos Architectural Signage Systems, Oklahoma City, Oklahoma; 800-725-7266; www.ARKRAMOS.com.

B. Best Manufacturing Company, Montrose, Colorado; 800-235-2378.

C. Century Sign Builders, Albuquerque, New Mexico; 505-888-2901; www.csbsigns.com.

D. Signsource, Prescott, Arizona; 520-778-5896.

E. Gemini Incorporated, Cannon Falls, Minnesota; 800-533-0520.

F. Requests to use equivalent products of other manufacturers shall be submitted in accordance with Section 01 25 13 - Product Substitution Procedures.

2.2 ROOM SIGNS

A. Type: Rest room signs fabricated from modified acrylic that are washable, scratch resistant, fire retardant, and resistant to most acids and alcohol solvents; B8x8-RR Rest Room Identification Sign as manufactured by Century Sign Builders.

B. Thickness: 1/8 inch.

C. Corners: Square..

D. Colors: Selected by Architect from manufacturer's full range and providing 70 percent contrast between text/graphics and background.

E. Size: 7-3/4 by 7-3/4 inches..

F. Lettering: 1/32 inch raised tactile characters with accompanying braille:

1. Height: 5/8 inch high.

2. Font: Helvetica 55

3. Text for each sign:

a. Room 114: WOMEN

b. Room 113: MEN

c. Room 102: RESTROOM

G. Symbols: 1/32 inch raised graphics for high international gender and handicapped access symbols.

H. Accompanying braille indications: Grade 2.

I. Mounting: Surface mount signs with foam tape with silicone sealant. For signs mounted on glass panels, provide blank plastic sign panel of same size and color as room sign for mounting on opposite glass surface to conceal mounting adhesive.

2.3 CAST PLAQUE

A. Type: Cast aluminum, 5/16 inch thick to be mounted with concealed studs; Custom Cast Aluminum Plaques as provided by Century Sign Builders.

B. Dedication plaque: Rectangular plaque, 24 inches wide by 24 inches high.

1. Surface: Raised copy with leatherette background and satin finish.

2. Border: Single line.

3. Graphics and text: As provided by Architect.

2.4 ACCESSIBLE PARKING AND TRAFFIC SIGNS

A. Types: 18 gage bonderized steel sign with rounded corners and baked enamel background with screen printed graphics.

B. Refer to Drawings for sizes, designs, graphics, text, and quantities.

C. Sign supports:

1. Posts: Galvanized U channel with 3/8 inch diameter mounting holes.

2. Metal loop supports: Fabricated from tubular steel members as illustrated on Drawings and detailed on reviewed shop drawings.

PART 3 - EXECUTION

3.1 DOOR SIGNS AND PLAQUE

A. Install after walls and doors are finished.

B. Mount room signs and plaque according to reviewed shop drawings and manufacturer's instructions.

C. Do not permanently mark finished surfaces with chalk lines or other reference marks.

D. Locate room signs on wall adjacent to door at heights and locations indicated on Drawings.

E. For signs mounted on glass panels, mount blank panel on opposite glass surface and directly behind room sign to conceal mounting adhesive.

F. After installation is complete, clean and polish signs and adjacent surfaces.

3.2 ACCESSIBLE PARKING AND TRAFFIC SIGNS

A. Embed sign posts in 10 inch minimum diameter concrete foundation with 16 inch minimum embedment depth. Finish foundation below finish grade.

B. Locate signs at locations designated by Architect.

C. Provide sufficient length post and position sign to comply with ADA visibility requirements.

D. Wash sign faces.

END OF SECTION

SECTION 10 21 14

METAL TOILET COMPARTMENTS

PART 1 - GENERAL

1.1 SUMMARY

A. Section includes: Powder coated galvanized steel toilet compartments including required fittings, hardware, and accessories.

B. Related sections:

1. Section 06 10 00 - Rough Carpentry and Section 09 21 16 - Gypsum Board Assemblies: Blocking in metal stud partitions for wall anchorage of toilet compartments.

2. Section 10 28 13 - Toilet Accessories: Accessories mounted on toilet compartments.

1.2 REFERENCES

A. Americans with Disabilities (ADA) Standards for Accessible Design.

B. ANSI A117.1 - American National Standard for Buildings and Facilities - Providing Accessibility and Usability for Physically Handicapped People.

C. ASTM A526 - Steel Sheet, Zinc-Coated (Galvanized) by the Hot-Dip Process, Commercial Quality.

D. UFAS - Uniform Federal Accessibility Standards.

1.3 SUBMITTALS

A. Provide in accordance with Section 01 33 00 - Submittal Procedures:

1. Product data for compartments, panels, finishes, hardware, and accessories.

2. Shop drawings showing partition plans, elevations, dimensions, door swings, details for supports, and method of anchorage.

3. Samples of manufacturer's finishes for selection by Architect.

4. Certificate showing compliance of finish with performance requirements specified in Paragraph 2.6.

5. Installation instructions.

6. Maintenance instructions.

1.4 QUALITY ASSURANCE

A. Products and installation shall comply with ADA Standards, ANSI A117.1, and UFAS.

PART 2 - PRODUCTS

2.1 ACCEPTABLE MANUFACTURERS

A. All American Metal Corporation, Freeport, New York; 516-623-0222; www.allamericanmetal.com.

B. American Sanitary Partition Corporation, Ocoee, Florida; 407-656-0611; www.am-sanitary-partition.com.

C. General Partitions Manufacturing Corporation, Erie, Pennsylvania.; 814-833-1154; www.generalpartitions.com.

D. Global Steel Products Corporation, Deer Park, New York; 631-586-3330; www.globalpartitions.com.

E. Knickerbocker Partitions Corporation, Freeport, New York; 516-546-0550; www.knickerbockerpartitions.com.

F. Metpar Corporation, Westbury, New York; 516-333-2600; www.metpar.com.

G. Requests to use equivalent products of other manufacturers shall be submitted in accordance with Section 01 25 13 - Product Substitution Procedures.

2.2 TYPE

A. Toilet compartments: Panels supported by pilasters anchored to floor and braced overhead with headrail; Series 40 - Floor Supported with Headrail as manufactured by General Partitions Manufacturing Corporation.

2.3 PANELS

A. Fabricate from two galvanized steel face sheets pressure bonded to honeycomb core.

B. Face sheets: Steel sheet, ASTM A526 with G60 zinc coating. Minimum thickness:

1. Partition and door panels: 22 gage.

2. Pilaster panels: 20 gage.

C. Minimum thickness:

1. Panels and doors: 1 inch.

2. Pilasters: 1-1/4 inches.

D. Core: Sound deadening, moisture resistant, impregnated cardboard honeycomb. Adhere each cell to face sheets with moisture impervious adhesive.

E. Edges: After assembling face sheets together, attach die drawn steel, radiused, smooth molding to all four panel sides.

F. Corner reinforcement: At each panel corner, mechanically fuse formed steel corner reinforcement to panel edges.

G. Panel sizes:

1. Toilet compartment panel: Width to suit compartment depth shown on Drawings by 58 inches high.

2. Inswinging door: 24 inches wide by 58 inches high.

3. Outswinging door for use by persons with physical handicaps: Width to provide 32 inch clear opening by 58 inches high.

4. Pilaster: Width to suit compartment size by 82 inches high.

2.4 FITTINGS

A. Headrail: Extruded aluminum channel with anti-grip shape, designed to fit over top of pilasters, 1-7/8 by 1-5/32 inches.

B. Attachment hardware: Chrome plated, one-way vandal- proof sex bolts and No. 14 plated steel metal screws of length recommended by manufacturer.

C. Connection brackets: Non-ferrous cast alloy, chrome plated.

D. Pilaster trim: Minimum 3 inches high, 0.031 inch thick stainless steel shoe.

2.5 HARDWARE

A. Hinges: Chrome plated non-ferrous cast pivot hinges with nylon cams and adjustable for door closing position. Top hinge mounted within door cutout.

B. Combination coat hook and rubber bumper: Cast alloy, chrome plated.

C. Concealed latch operating handle: Cast alloy, chrome plated mechanism that does not require twisting or turning of wrist to operate. Provide cover for exterior side.

D. Combination latch keeper and door stop with rubber bumper: Cast alloy, chrome plated.

E. Door pull: Cast alloy, chrome plated, straight loop design.

2.6 FACTORY FINISHING

A. Clean, degrease, and neutralize panels.

B. Finish coat: Electrostatically applied, thermoset, hybrid epoxy polyester powder coating. Finish shall not crack, peel, or deteriorate when tested under the following conditions:

1. 1,000 hours with 100 percent humidity at 100 degree F.

2. 300 hours of 20 percent salt spray at 100 degrees F.

3. 1,000 hours of water soak at 110 degrees F.

4. Minimum hardness: 2H.

C. Color: One color selected by Architect from manufacturer's full range.

D. Provide small quantity of matching paint for field touch-up of finish in accordance with Paragraph 3.4.

PART 3 - EXECUTION

3.1 PREPARATION

A. Coordinate requirements for blocking in stud walls to ensure proper support is provided for wall attachments.

B. Verify that site conditions are ready to receive work and opening dimensions are as indicated on shop drawings.

C. Verify correct spacing of plumbing fixtures.

3.2 INSTALLATION

A. Install partitions secure, plumb, and level in accordance with manufacturer's instructions.

B. Maintain 3/8 to 1 inch uniform space between wall and panels and between wall and end pilasters.

C. Attach panel brackets securely to walls using anchor devices recommended by manufacturer.

D. Where indicated on approved shop drawings, pilasters intersecting adjacent walls shall terminate 12 inches above floor and attach to wall with brackets.

E. Attach panels and pilasters to brackets with sheet metal screws.

F. Brace pilasters with overhead rail. Locate headrail joints at pilaster center lines.

G. Anchor pilaster to floor with heavy duty galvanized steel angle plate, sheet metal, screws, and anchors. Conceal floor fastenings with pilaster shoes.

H. Door installation: Hang doors from pilasters. Equip each door with two pivot hinges, door latch, door strike and keeper, and coat hook and bumper.

1. Install door pull on outswinging doors.

2. Install coat hook 12 inches minimum below top of door panel.

3.3 ERECTION TOLERANCES

A. Maximum variation from true position: 1/4 inch.

B. Maximum variation from plumb: 1/8 inch.

3.4 ADJUSTING

A. Touch up minor scratches and nicks in paint finish with same color and type of paint as original finish. Repair such that damage and refinishing cannot be detected. Wax and polish repaired area.

B. Replace significantly damaged, bent, deeply scratched, or dented panels.

C. Adjust hinges to locate inswinging doors in partial open position and outswinging doors in closed position when unlatched.

D. Adjust and align hardware to uniform clearance at vertical edge of doors.

3.5 CLEANING

A. Clean surfaces and wash with mild soap. Do not use abrasives.

END OF SECTION

SECTION 10 22 20

OPERABLE PARTITIONS

PART 1 - GENERAL

1.1 SUMMARY

A. Section includes: Manually operated, floor-to-ceiling operable partitions composed of top supported hinged pairs of flat panels including track and hardware for:

1. Partition A for sub-dividing Multi-Purpose Room 120.

2. Partition B for closing opening between adjacent Classrooms A116 and B117.

B. Related sections:

1. Section 01 23 00 - Alternates:

a. Additive Alternate No. 2 - Folding Partition System for Multi-Purpose.

b. Additive Alternate No. 3 - Folding Partition System for Classrooms.

2. Section 05 10 00 - Structural Steel: Overhead pre-punched steel beam supports and bracing for operable partitions.

3. Section 06 10 00 - Rough Carpentry: Blocking for installation of operable partitions.

4. Section 07 21 00 - Building Insulation: Acoustical insulation to be placed in soffits above operable partitions and in the Classroom partitions.

5. Section 09 21 16 - Gypsum Board Assemblies: Construction of partitions, enclosures, and soffits to receive operable partitions and tracks.

1.2 REFERENCES

A. ASTM E84 - Surface Burning Characteristics of Building Materials.

B. ASTM E90 - Airborne-Sound Transmission Loss of Building Partitions.

C. ASTM E413 - Classification for Rating Sound Insulation.

D. ASTM E557 - Standard Practice for Architectural Application and Installation of Operable Partitions.

1.3 PERFORMANCE REQUIREMENTS

A. STC rating in accordance with ASTM E90 and E413: 50.

B. Maximum track deflection under load: ½ inch.

1.4 SUBMITTALS

A. Provide in accordance with Section 01 33 00 - Submittal Procedures:

1. Product data describing partition operation, construction, hardware, and accessories. Include design safety factor and calculated loads transferred to Building support framing.

2. Shop drawings showing opening dimensions, stacking size, track layout, details of track and required supports, track loads, adjacent construction, and finish trim.

3. Finish samples.

4. Setting drawings: Requirements in other work for partition installation including support beam punching template.

5. Manufacturer's installation, cleaning, and maintenance instructions.

6. Copy of warranties required by Paragraph 1.7 for review by Architect.

1.5 QUALITY ASSURANCE

A. Manufacturer: Company specializing in manufacturing operable partitions with 10 years minimum successful experience.

B. Installer: Company experienced in installing operable partitions and approved by partition manufacturer for installation of their products.

1.6 DELIVERY, STORAGE, AND HANDLING

A. Clearly mark packages and panels with numbering system used on shop drawings. Do not use permanent marking on panels.

B. Protect panels during delivery, storage, and installation in accordance with manufacturer's instructions to prevent damage.

1.7 WARRANTY

A. Provide in accordance with Section 01 78 00 - Closeout Submittals:

1. 2 year warranty to cover materials, workmanship, and installation of operable partitions.

2. Lifetime warranty for hinges.

PART 2 - PRODUCTS

2.1 ACCEPTABLE MANUFACTURERS

A. Modernfold, Inc., Greenfield, Indiana; 800-869-9685; www.modernfold.com.

B. Hufcor, Inc., Janesville, Wisconsin; 800-542-2371; www.hufcor.com.

C. Requests to use equivalent products of other manufacturers shall be submitted in accordance with Section 01 25 13 - Product Substitution Procedures.

2.2 OPERABLE PARTITIONS

A. Types: Full height, manually operated, acoustical, operable, horizontal folding partition consisting of flat, paired panels, top supported with operable floor seals; Series 932 as manufactured by Modernfold, Inc.

1. Nominal openings:

a. Partition A: 36'-8" wide by 14 feet high

b. Partition B: 26 feet wide by 10 feet high.

B. Operation: Series of manually operated, hinged pairs which can be moved across the opening and locked in place when seals are set.

1. Vertical sound seals: Provide interlocking, universal, reversible tongue and groove configuration type seals between panels. Rigid plastic astragals or astragals on only one panel edge are not acceptable.

2. Horizontal top seals: Provide continuous contact extruded vinyl bulb shaped seals with pairs of non-contacting vinyl fingers to prevent distortion and which do not require mechanically operated parts.

3. Horizontal bottom floor seals: Provide operable seals which automatically drop as panels are positioned without need for tools or cranks.

a. Nominal operating clearance: 1 inch with an operating range of plus or minus ½ inch.

4. Seal color: Selected by Architect from manufacturer's standard range.

C. Panel construction:

1. Nominal thickness: 3 inches.

2. Width: 48 inches or as otherwise indicated on Drawings.

3. Horizontal and vertical framing members: Formed steel.

4. Panel core, substrate, and skin: Class A in accordance with ASTM E84. Material types as required to meet STC requirement specified in paragraph 1.3.A.

5. Hinges: Full leaf, butt steel hinges attached directly to frame with welded anchor plates. Provide number of hinges as recommended by manufacturer for height of partition and as indicated on reviewed shop drawings.

D. Panel finish: Vinyl surface selected by Architect from manufacturer’s standard range.

E. Panel hanging weight: 5 to 11 pounds per square foot.

F. Trim: Provide aluminum and steel trim with powder paint coating as required for durable, functional, finished installation with clean, neat appearance as indicated on reviewed shop drawings. Finish trim with powder paint coating in color selected by Architect from manufacturer's standard range.

1. No vertical trim shall be exposed on panels in closed position.

G. Hinged jambs: Provide hinged jamb sections for anchoring end panels to metal stud and gypsum board partitions as detailed on reviewed shop drawings.

H. Expandable jamb assembly: Equip edge of leading panel with expandable nose section to acoustically seal against jamb section attached to wall when operable partition is closed.

2.3 SUSPENSION SYSTEM

A. Track: 11 gage minimum roll-formed steel track shall be supported by adjustable steel hanger brackets connected to structural support by pairs of 0.38 inch diameter threaded rods; No. 17 Suspension System provided by Modernfold, Inc.

1. Exposed track soffit: All-steel fabrication integral to track and prime painted. Wood and aluminum soffits are not acceptable.

2. Equip panels with all-steel trolleys with steel tired, ball-bearing wheels. Nylon or plastic tires are not acceptable.

B. Stacking configuration: Single side stacking with straight track layout as indicated on Drawings.

2.4 HARDWARE

A. Provide manufacturer's standard hardware, fasteners, and other accessories as required for complete, structurally sound, functional, finished installation and operation.

PART 3 - EXECUTION

3.1 PREPARATION

A. Field verify opening dimensions prior to fabrication and submittal of shop drawings.

B. Coordinate requirements for suspending track and hanging operable partitions with provision of structural framing specified in Section 05 10 00 - Structural Steel.

C. Coordinate provision of operable partition track with installation of suspended soffits specified in Section 09 21 16 - Gypsum Board Assemblies.

1. Ensure that acoustical barrier in soffit above operable partition continues to structural roof deck.

2. Ensure allowance is made to permit lifting out of panels to adjust track height.

3.2 INSTALLATION

A. Install operable partitions in accordance with ASTM E557, manufacturer's instructions, and reviewed shop drawings.

B. Securely attach and brace partition track to structure. Connect track to structural support with threaded steel rods. Secure and brace track to building structural members to resist seismic and other lateral loads.

C. Install panels from marked packages in numbered sequence as indicated on reviewed shop drawings.

D. Do not install broken, cracked, chipped, deformed, or unmatched panels. Replace with new components.

E. Fit, align, and adjust partition assembly to be level and plumb. Provide smooth operation from stacked to drawn position.

F. Completely operate each partition 4 times to ensure proper installation and operation. Correct deficiencies.

3.3 CLEANING AND DEMONSTRATING

A. Clean surfaces and hardware.

B. Demonstrate operation and maintenance of operable partitions to Owner's representatives in accordance with Section 01 79 00 - Demonstration and Training.

END OF SECTION

SECTION 10 26 13

CORNER GUARDS

PART 1 - GENERAL

1.1 SUMMARY

A. Section includes: Manufactured corner guards for interior partitions.

1.2 SUBMITTALS

A. Provide in accordance with Section 01 33 00 - Submittal Procedures:

1. Product data.
2. Shop drawings for attachment details.
3. Samples: Minimum 4-inch sample for each type corner guard being provided.

PART 2 - PRODUCTS

2.1 ACCEPTABLE MANUFACTURERS

A. Construction Specialties, Inc., Decatur, Alabama; 800-233-8493; www.c-sgroup.com.

B. Requests to use equivalent products of other manufacturers shall be submitted in accordance with Section 01 25 13 - Product substitution Procedures.

2.2 CORNER GUARDS

A. Type: Surface mounted, stainless steel, protective guard for outside corners of gypsum board partitions; C/S Acrovyn Model as manufactured by Construction Specialties, Inc.

B. Material: 16 gage, Type 304 alloy stainless steel.

C. Profile: 1-1/2 inch legs forming 90 degree or other angle as indicated on Drawings..

D. Length: 8 feet.

E. Fasteners: Countersunk stainless steel screws.

F. Finish: No. 4 satin stainless steel finish.

PART 3 - EXECUTION

3.1 PREPARATION

A. Complete all finishing operations, including painting, before installing corner guards.

B. Clean substrate of dust, dirt, and loose particles.

3.2 INSTALLATION

A. Install corner guards on outside corners of gypsum board partitions where indicated on Drawings.

B. Mount above rubber or ceramic base.

C. Install with countersunk screws in predrilled holes. Space fasteners uniformly and evenly according to manufacturer's recommendations.

D. Install straight and plumb, tight to wall, and without voids.

END OF SECTION

SECTION 10 28 13

TOILET ACCESSORIES

PART 1 - GENERAL

1.1 SUMMARY

A. Section includes: Toilet accessories and attachment hardware and plumbing pipe safety covers.

B. Related sections:

1. Section 06 10 00 - Rough Carpentry and Section 09 21 16 - Gypsum Board Assemblies: Blocking in partitions for toilet accessories.

2. Section 08 80 00 - Glazing: Large size adhesive mounted mirrors.

3. Section 22 - Plumbing: Plumbing fixtures and fittings.

1.2 REFERENCES

A. ANSI A117.1 - Specifications for Making Buildings and Facilities Accessible To and Usable by Physically Handicapped People.

B. ASTM A123 - Zinc (Hot-Dip Galvanized) Coatings on Iron and Steel Products.

C. ASTM A167 - Stainless and Heat-Resisting Chromium-Nickel Steel Plate, Sheet, and Strip.

D. ASTM A269 - Seamless and Welded Austenitic Stainless Steel Tubing for General Service.

1.3 SUBMITTALS

A. Submit in accordance with Section 01 33 00 - Submittal Procedures:

1. List of proposed products and product data.

2. Samples for items not specified but requested for substitution.

3. Manufacturer's installation instructions.

1.4 QUALITY ASSURANCE

A. Provide and install accessories to comply with ANSI A117.1 for adult usage.

PART 2 - PRODUCTS

2.1 ACCEPTABLE MANUFACTURERS

A. Toilet accessories:

1. Bobrick Washroom Equipment, Inc., North Hollywood, California; 800-553-1600.

2. Kimberly-Clark Corporation, Roswell, Georgia; 800-241-2739.

B. Plumbing pipe safety covers: Plumberex Specialty Products, Inc., Palm Springs, California; 800-475-8629.

C. Diaper changing station: Koala Kare Products, Centennial, Colorado; 888-733-3456; www.koalabear.com.

D. Requests to use equivalent products of other manufacturers shall be submitted in accordance with Section 01 25 13 - Product Substitution Requirements.

2.2 MATERIAL

A. Toilet accessories are to be fabricated as specified from:

1. Polycarbonate plastic.

2. Stainless steel sheet, ASTM A167, and tubing, ASTM A269.

3. Dye-cast aluminum.

B. Provide with anchor plates, adapters, fasteners, and other anchoring devices required for secure installation.

C. Fasteners, screws, and bolts: Galvanized or stainless steel, tamperproof, and size appropriate for finish surface where items are mounted.

2.3 FABRICATION

A. Form exposed surfaces from single sheet of material, free of joints. Form surfaces flat without distortion. Maintain surfaces without scratches and dents.

B. Weld and grind smooth joints of fabricated components.

2.4 TOILET ACCESSORIES

A. Grab bars: 18 gage stainless steel with peened non-slip gripping surface, 1-12 inch diameter, 1-1/2 inch clearance from wall, concealed mounting flange welded to bar and screw fasteners concealed with snap-on escutcheon plate:

1. Item No. 1: Vertical grab bar18 inches long; No. B-6806.99 x 18 as manufactured by Bobrick Washroom Equipment, Inc.

2. Item No. 2: Horizontal grab bar 24 inches long; No. B6806.99 x 24 as manufactured by Bobrick Washroom Equipment, Inc.

3. Item No. 3: Horizontal grab bar 36 inches long; No. B6806.99 x 36 as manufactured by Bobrick Washroom Equipment, Inc.

4. Item No. 4: Horizontal grab bar 42 inches long; No. B-6806.99 x 42 as

B. Item No. 5 - Soap dispenser: Surface mounted, push dispenser with pouch soap refills and viewing window; No. KCC 91180 as manufactured by Kimberly Clark.

1. Material: Smoke gray plastic.

2. Capacity: 800 ml soap refills.

3. Nominal size: 6 inches wide by 10-1/2 inches high by 4-1/2 inches deep.

C. Item No. 6 -Toilet tissue dispenser: Surface mounted, toilet tissue dispenser holding two rolls, vandal and theft resistant and with controlled delivery; B-265 as manufactured by Bobrick Washroom Equipment, Inc.

1. Material: Heavy-gage chrome plated steel with bright polished finish.

2. Nominal size; 12-1/4 inches wide by 4-1/4 inches deep.

D. Item No. 7 - Surface mounted roll paper towel dispenser: No. B-2860 as manufactured by Bobrick Washroom Equipment, Inc.

1. Construction: 22 gage stainless steel with all-welded construction, satin finish. Equipped with tumbler lock key.

2. Capacity: 8 inches wide, 8 inches in diameter. Dispenses one 12 inch length of towel per pull.

3. Designed to automatically dispense full roll when stub roll is depleted.

E. Item No. 8 - Sanitary napkin disposal: Surface mounted, welded stainless steel disposal unit; B-254 as manufactured by Bobrick Washroom Equipment, Inc.

1. Size: 10-11/15 inches wide by 15-1/8 inches high by 4-1/16 inches deep.

2. Equip disposal with self-closing hinged panel, removable polyethylene receptacle, and tumbler key lock.

3. Capacity: 1.2 gallon.

F. Item No, 9 - Free-standing waste receptacle fabricated from 22-gage stainless steel with satin finish. Provide with removable cover, vinyl bumper strips, and rubber feet; B-2280 as manufactured by Bobrick Washroom Equipment, Inc.

1. Capacity: 21 gallons.

2. Size: 14 X 14 inches wide and 37-1/2 inches high.

G. Mirrors: Flat surface mounted mirror in stainless channel frame with mitered corners and No. 1 Quality 1/4 inch electrolytically plated tempered mirror glass; No. B-165 x 1836 as manufactured by Bobrick Washroom Equipment, Inc.

1. Nominal size: 18 inches wide by 36 inches high.

H. Plumbing pipe safety covers: Removable covers designed to insulate exposed plumbing pipes under lavatories and protect users from sharp or rough edges and burns from hot pipes. Fabricated with closed cell foam insulation covered with vinyl cover with Velcro sealing strips and tamper-proof strap; Handy Shield as manufactured by Plumberex Specialty products, Inc.

1. Types:

a. P-trap safety cover.

b. Supply pipe and valve cover.

2. Vinyl color: Selected by Architect from manufacturer's standard range.

3. Valve and supply pipe cover.

I. Item 10 - Diaper changing station: Horizontal, surface mounted, fold down, baby diaper changing station with concave changing bed complying with ASTM F2285-04; No. KB-110-SSRE as manufactured by Koala Kare Products:

1. Construction: Molded high density polyethylene bed on steel chassis.

2. Nominal size: 35-3/16 inches wide by 22-1/4 inches high and projecting 4 inches when closed. When open, bed projects 23-3/16 inches from wall.

3. Rated load capacity: 200 pounds.

4. Operation: Opens and closes with pneumatic gas spring mechanism in concealed cylinder.

5. Equip changing station with child protection safety straps and bag hooks.

6. Dual liner cavity holds total of 50 liners.

2.5 KEYING

A. Provide 2 keys for each accessory requiring secure access for filling or maintenance in accordance with Section 01 78 00 - Closeout Submittals.

B. Master key accessories.

2.6 FINISHES

A. Stainless steel: No. 4 satin luster finish.

B. Chrome/nickel plating: ASTM B456, Type SC 2 satin finish.

C. Galvanizing: Galvanize ferrous metal and fastening devices; ASTM A123 to 1.25 ounces per SY minimum.

PART 3 - EXECUTION

3.1 PREPARATION

A. Coordinate requirements for blocking and deliver inserts and rough-in frames to site at appropriate time for building-in.

B. Coordinate installation of wall mounted toilet accessories with application of wall finishes specified in Section 09 31 00 - Ceramic Tile and Section 09 91 00 - Painting.

C. Coordinate blocking requirements with Section 06 10 00 - Rough Carpentry.

D. Provide templates and rough-in measurements as required.

E. Verify with Architect exact locations of accessories.

3.2 INSTALLATION

A. Install in accordance with manufacturer's instructions.

B. Mounting heights: Refer to Drawings and references listed in Paragraph 1.4.

C. In Toilets install plumbing pipe safety covers on all exposed piping underneath lavatories and vanities.

3.3 CLEANING, TESTING, AND DEMONSTRATING

A. Remove protective wrappings from toilet accessories. Clean surfaces with mild soap solution. Do not use abrasives.

B. Protect toilet accessories from remaining construction activities. Immediately remove and replace items that are damaged.

END OF SECTION

SECTION 10 44 00

FIRE EXTINGUISHERS AND CABINETS

PART 1 - GENERAL

1.1 SUMMARY

A. Section includes: Fire extinguishers and cabinets

B. Related sections:

1. Section 06 10 00 - Rough Carpentry and Section 09 21 16 - Gypsum Board Assemblies: Blocking for mounting cabinets.

1.2 REFERENCES

A. ANSI/NFPA 10 - Portable Fire Extinguisher.

B. ANSI/UL 711 - Rating and Fire Testing of Fire Extinguisher.

C. ASTM E814 - Fire Tests of Through Penetration Fire Stops.

D. ICC/ANSI A117.1 - International Code Council/American National Standards Institute Standard on Accessible and Useable Buildings and Facilities.

E. UL 299 - Dry Chemical Fire Extinguisher.

1.3 SUBMITTALS

A. Provide in accordance with Section 01 33 00 - Submittal Procedures:

1. Product data including dimensions, operational features, anchorage details, rough-in measurements, and locations.

2. Schedule of extinguishers and cabinets indicating types and installation locations.

3. Maintenance data describing test, refill and recharge schedules, and re-certification requirements.

1.4 QUALITY ASSURANCE

A. Extinguishers and cabinets shall be products of a single manufacturer.

B. Extinguishers shall conform to ANSI/NFPA and bear UL label in accordance ANSI/UL 711 testing.

C. Fire extinguisher cabinets shall be provided and installed in compliance with ICC/ANSI A117.1.

PART 2 - PRODUCTS

2.1 ACCEPTABLE MANUFACTURERS

A. J. L. Industries, Inc., Bloomington, Minnesota; 952-835-6850; www.jlindustries.com.

B. Larsen's Manufacturing Company, Minneapolis, Minnesota; 763--571-1181; www.larsenmfg.com.

C. Requests to use equivalent products of other manufacturers shall be submitted in accordance Section 01 25 13 - Product Substitution Procedures.

2.2 EXTINGUISHERS

A. Type A: Multi-purpose dry chemical extinguisher containing fluidized, siliconized mono ammonium phosphate powder; Larsen Number MP10.

1. UL rating: 4A-60B:C.

2. Capacity: 10 pounds.

3. Size: 5 inches diameter by 20 inches high.

4. Finish: Red enamel.

B. Type B: Wet chemical, K (kitchen) class extinguisher designed for grease fires containing potassium acetate agent and which leaves no chemical residue; Larsen Number WC-6L.

1. UL rating: 2A:K.

2. Capacity: 6 liters.

3. Size: 7 inches diameter by 25 inches high.

4. Finish: Stainless steel.

2.3 EXTINGUISHER CABINETS

A. Types:

1. Type A: Semi-recessed, non-rated with rolled edge; Architectural Series No. SS2409-6R as manufactured by Larsen's Manufacturing Company.

2. Type B: Semi-recessed, non-rated with rolled edge; Architectural Series No, SS2712-RL as manufactured by Larsen's Manufacturing Company.

B. Sizes:

1. Inside box:

a. Type A: 9-1/2 inches wide by 24 inches high by 6 inches deep.

b. Types B: 12 inches wide by 27 inches high by 8 inches deep.

2. Outside trim dimensions:

   a. Types A: 13 inches wide by 27-1/2 inches high.

   b. Types B: 15-1/2 inches wide by 30-1/2 inches high.

3. Maximum projection from wall: 2-1/2 inches.

C. Material:

1. Cabinet box: Formed heavy gage steel box with white baked enamel finish.

2. Door and trim material: Stainless steel.

D. Door: Architectural Series Full Glass Door with tempered glazing.

E. Fabrication:

1. Form body of cabinet with tight inside corners and seams. Drill holes for anchorage.

2. Form perimeter trim and door stiles by welding, filling, and grinding smooth.

3. Hinge doors for 180 degree opening with continuous hinge.

PART 3 - EXECUTION

3.1 INSTALLATION

A. Verify rough openings for cabinets are correctly sized and located and blocking has been provided.

B. Install cabinets plumb and level in wall openings.

C. Secure rigidly in place in accordance with manufacturer's instructions.

3.2 SCHEDULE

A. Install fire extinguishers and cabinets in locations shown on Drawings:

1. Kitchen: Type B extinguisher in Type B cabinet.

2. All other locations as indicated on Drawings: Type A extinguisher in Type A cabinet.

END OF SECTION

SECTION 10 71 13

FABRIC SUN CONTROL SHADES

PART 1 - GENERAL

1.1 SUMMARY

A. Section includes: Custom fabricated, exterior, stationary, sun control shades installed above the west Building Entrance (Vestibule 107).

B. Related sections:

1. Section 05 10 00 - Structural Metal Framing: Steel pipe supports for attachment of sun shades.

2. Section 06100 - Rough Carpentry: Blocking in cantilevered roof structure for attachment of sun shades.

3. Section 08 41 14 - Aluminum Doors, Windows, and Framing: Glazed aluminum framed Building Entrance.

1.2 SUBMITTALS

A. Provide in accordance with Section 01 33 00 - Submittal Procedures:

1. Product data for fabric and other materials.

2. Shop drawings showing fabrication pattern, profile and elevation of sun shades, system.

3. Sample of fabric in selected color.

4. Copy of warranty required in Paragraph 1.4 for review by Architect.

1.02 QUALITY ASSURANCE

A. Fabricator and installer: Single company specializing in the design, fabrication, and installation of sun shades.

B. Sunshade installation shall be designed to resist applicable wind loads.

1.03 WARRANTY

A. Sunshade fabric: 5 year warranty against loss of color or strength from normal exposure conditions of sunlight, mildew, rot, and atmospheric chemicals.

PART 2 - PRODUCTS

2.1 ACCEPTABLE MANUFACTURERS

A. ShadeSails, LLC, South Padre Island, Texas; 956-772-4711; www.shadesails.com..

B. Requests to use equivalent products of other manufacturers shall be submitted in accordance with Section 01 25 13 - Product Substitution Procedures.

2.2 SUNSHADE SYSTEM

A. Type: Custom fabricated, exterior, stationary, sun control shade system installed above the west Building Entrance (Vestibule 107): Wire Edge Type B Shade System as manufactured by ShadeSails, LLC.

B. Configuration: Grouping of six pairs of two triangular fabric sails reinforced with stainless steel cables as illustrated and dimensioned on Drawings and reviewed shop drawings.

C. Fabric: HDPE fabric consisting of round mono-filament fibers: Momotec 370 Fabric as provided by Shade Sails, LLC.

D. Individual sails:

1. Nominal size and shape: Triangular 48 inches wide by 108 inches high.

2. Fabricate each sail from a single piece of fabric without seams.

3. Reinforce edges and corners with heavy duty polyester webbing.

4. Equip each attachment point with stainless steel turnbuckle and shackle.

PART 3 - EXECUTION

3.1 PREPARATION AND COORDINATION

A. Coordinate design, provision, and installation of fabric sun control shades with the following to ensure proper support is provided for attachment of sunshade sails:

1. Section 05 10 00 - Structural 05 10 00 - Structural Metal Framing: Steel pipe supports as dimensioned on Drawings and reviewed shop drawings.

2. Section 06 10 00 - Rough Carpentry: Wood blocking is provided in roof for anchoring top of sunshades.

B. Prior to fabrication or submittal of shop drawings, field verify size and construction of area for sunshades.

3.2 INSTALLATION

A. Install sunshades in accordance with reviewed shop drawings and manufacturer's instructions.

B. Attach fabric corners to supporting anchors so that fabric is taut and secure.

C. Ensure that pitch is correct and that sails hang uniformly.

END OF SECTION

SECTION 10 75 00

FLAGPOLE

PART 1 - GENERAL

1.1 SUMMARY

A. Section includes: Aluminum flagpole including halyards, and accessories.

B. Related sections:

1. Section 01 10 00 - Summary: Flag provided by Owner.

2. Section 03 30 00 - Cast-in-Place Concrete: Concrete base construction.

1.2 REFERENCES

A. ASTM B241 - Aluminum and Aluminum-Alloy Seamless Pipe and Seamless Extruded Tube.

1.3 PERFORMANCE REQUIREMENTS

A. Pole with flag flying: Resistant without permanent deformation to 100 MPH wind.

1.4 SUBMITTALS

A. Provide in accordance with Section 01 33 00 - Submittal Procedures:

1. Product data.

2. Shop drawings indicating dimensions, base attachment details, and imposed loads.

B. LEED Submittals: Refer to Supplemental Tables in Section 01 81 13 - Sustainable Design Requirements - LEED for Schools v4 for LEED submittals intended for this Section.

1.5 COORDINATION

A. Coordinate supply of flagpole with construction of foundations. Provide foundation tube and base plate assembly in timely fashion.

1.6 EXTRA MATERIALS

A. Provide in accordance with Section 01 78 00 - Closeout Submittals:

1. Three halyards each with two swivel snaps.

PART 2 - PRODUCTS

2.1 ACCEPTABLE MANUFACTURERS

A. Concord Industries, Inc., Addison, Texas; 800-527-3902.

B. Pole-Tech Company, Inc., Setauket, New York, 800-633-6733.

C. Requests to use equivalent products of other manufacturers shall be submitted in accordance with Section 01 25 13 - Product Substitution Procedures.

2.2 FLAGPOLE

A. Type: Cone-tapered aluminum pole, external halyard system, ground mounted and suitable for 5 by 8 foot size flag; Continental Series No. C25020125 as manufactured by Concord Industries, Inc.

B. Material: Seamless ASTM B241 6063-T6 aluminum alloy tubing.

C. Minimum wall thickness: 0.125 inch.

D. Base diameter: 5 inches.

E. Top diameter: 3 inches.

F. 24 feet exposed height, 27 feet overall height.

G. Finish: Black anodized.

2.3 MOUNTING COMPONENTS

A. Foundation tube: 16 gage galvanized steel pipe section, 10 inches diameter, 36 inches long.

B. Base plate: Steel plate 14 inches square minimum.

C. Setting plate: Steel plate 6 inches square.

D. Ground spike: 3/4-inch diameter 18-inch long copper rod welded to base and setting plates.

E. Collar: Spun aluminum, 11-inch minimum diameter with finish to match flagpole shaft.

F. Cleat cover: Locking type.

2.4 FITTINGS AND ACCESSORIES

A. Finial: 6-inch diameter 14-gage spun aluminum ball, gold anodized finish with flush seam.

B. Truck: Cast aluminum, revolving, non-fouling with stainless steel bearings and cast nylon sheaves.

C. Halyards: 5/16-inch diameter white waterproof polypropylene with 4 chrome swivel-snaps to secure flags.

D. Cleats: 9- inch cast aluminum, two per flagpole.

PART 3 - EXECUTION

3.1 PREPARATION

A. Verify concrete foundation is ready to receive flagpole and dimensions are as required.

B. Coat portions of pole set below grade and other metal surfaces in contact with dissimilar materials with bituminous paint.

3.2 INSTALLATION

A. Install flagpole and fittings in accordance with approved shop drawings and manufacturer's instructions.

B. Electrically ground flagpole.

C. Install flagpole in foundation tube on base plate with centering wedges. Fill space around flagpole with sand and compact.

D. Apply sealant and install collar.

E. Maximum variation of flagpole from plumb: 1 inch.

3.3 ADJUSTING AND CLEANING

A. Adjust operating devices so that halyard functions smoothly.

B. Clean surfaces.

END OF SECTION

SECTION 11 31 10

CLASSROOM APPLIANCES

PART 1 - GENERAL

1.1 SUMMARY

A. Section includes: Range, refrigerator, dishwasher, and range hood for Classroom117.

B. Related sections:

1. Section 07 54 00 - Thermoplastic Membrane Roofing: Opening in roof structure for installation of range hood.

2. Section 09 77 70 - Stainless Steel Wall Finish: Stainless steel wall panel installed behind range cooktop.

3. Section 11 40 00 - Food Service Equipment: Equipment and appliances for Kitchen 105.

4. Division 22 - Plumbing and Division 26 - Electrical: Plumbing and electrical rough-ins and services for appliances.

1.2 REFERENCES

A. US Department of Energy: Energy Star Voluntary Energy Performance Rating Program for Appliances.

1.3 SUBMITTALS

A. Provide in accordance with Section 01 33 00 - Submittal Procedures:

1. Product data for manufactured appliances. Indicate type, selected options, performance characteristics, capacities, controls, configuration, sizes, materials, finishes, locations, and utility requirements and connections.

2. Shop drawings: Indicate dimensions, installation details, interface with adjacent construction, and wiring diagrams.

3. Manufacturer's certificates showing compliance with Paragraph 1.4.

4. Copy of warranties required by Paragraph 1.5 for review by Architect.

B. Provide in accordance with Section 01 33 00 - Submittal Procedures and Section 01 78 00 - Closeout Submittals operation and maintenance manuals in binders for all appliances provided.

1.4 QUALITY ASSURANCE

A. Appliances shall have Federal Energy Star Qualification Rating.

B. Electrical wiring and components shall conform to Underwriters' Laboratories (UL), Inc. and bear UL labels.

1.5 WARRANTY

A. Provide under provisions of Section 01 78 00 - Closeout Submittals:

1. Manufacturer's 1 year minimum warranty for each appliance being provided.

PART 2 - PRODUCTS

2.1 ACCEPTABLE MANUFACTURERS

A. General Electric Company, Louisville, Kentucky; 800-626-2000; www.ge.com.

B. Accurex, LLC, Schofield, Wisconsin; 800-333-1400; www.accurex.com; Local representative: Wade Bailey, El Paso, Texas; 480-208-9296.

C. Requests to use equivalent products of other manufacturers shall be submitted in accordance with Section 01 25 13 - Product Substitution Procedures.

2.2 REFRIGERATOR

A. Type: Refrigerator with ice maker and top freezer; Model GIE18GNC/GSN/GTN Refrigerator as manufactured by General Electric Company.

B. Total capacity: 17.5 cubic feet.

C. Dimensions: 28 inches wide by 67-3/8 inches high by 30-1/2 inches deep.

D. Finish and color: As selected by Architect from manufacturer’s full range.

E. Components:

1. Adjustable glass and wire shelves.

2. Sliding deli drawer.

3. Transparent drawers.

4. Factory installed ice maker.

5. Interior LED light system.

6. Up-front temperature controls.

F. Equip refrigerator with connection kit for ice maker.

2.3 DISHWASHER

A. Type: Built-in, front loading, dishwasher; No. GDT225SGL/SSL as manufactured by General Electric Company.

B. Size: 23-3/4 inches wide by 23-1/2 inches deep with adjustable height from 32-1/4 to 34-5/8 inches.

C. Finish: Stainless steel interior and exterior finish and color selected by Architect from manufacturer’s standard range.

D. Hidden controls.

E. 3-level wash cycles.

F. Electrical requirements: 120 volt AC, 60 hertz, 15 amp circuit.

G. ADA compliant.

2.4 RANGE

A. Type: Slide-in, free-standing, electric range with ceramic glass cooktop; No. JS645EL/SL/FL/DL as manufactured by General Electric Company.

B. Size: 29-7/8 inches wide by 37-1/4 inches high by 27-1/3 inches deep.

C. Oven capacity: 5.3 cubic feet.

D. Equip range with removable full-width storage drawer.

E. Electrical requirements; 240 volts and 12.1 KW rating.

F. ADA compliant.

G. Up-front controls and LED display.

H. Two 9"/16" diameter, 3,100 watt cooktop elements.

I. Finish and color selected by Architect from manufacturer's standard range.

2.5 RANGE HOOD

A. Type: Residential range hood; No. XRRS-W-30-T-E-D-N as manufactured by Accurex, LLC.

B. Nominal size: 30 inches wide by 23-1/2 inches deep.

C. Compliance: UL300A and NFPA 101.

D. Material: 300 stainless steel where exposed.

E. Equip range hood with external inline fan for top discharge.

F. Self- contained fire suppression system.

G. Electronic detection.

H. In accordance with Division 23 - HVAC and Section 07 54 00 - Thermoplastic Membrane Roofing provide ductwork and roof cap for range hood.

2.6 ACCESSORIES

A. Provide appliances with rough-in hardware, supports, electrical and plumbing connections, attachment devices, fasteners, anchors, closure trim, and other accessories as required for complete, functional installation.

PART 3 - EXECUTION

3.1 PREPARATION

A. Prior to installation, verify that rough-ins, dimensions, and other conditions are such that appliances can be properly installed.

B. Verify that electric power is available and of correct characteristics.

3.2 INSTALLATION

A. Install appliances in accordance with applicable codes, manufacturer's instructions, and reviewed shop drawings.

B. Locate appliances as indicated on Drawings and reviewed shop drawings.

C. Insulate components to prevent electrolysis between dissimilar metals.

D. Use anchoring devices appropriate for equipment and expected usage.

3.3 ADJUSTING

A. Adjust appliances to ensure proper operation.

B. Put each item through complete operating cycle, verify proper installation and operation, and correct deficiencies.

3.4 CLEANING

A. Remove temporary labels, masking, and protective coverings.

B. Thoroughly wash and clean appliances.

3.5 DEMONSTRATION

A. Demonstrate appliances for Owner's designated representatives and instruct them in operation and maintenance.

END OF SECTION

SECTION 11 40 00

FOOD SERVICE EQUIPMENT

PART 1 - GENERAL

1.1 SUMMARY

A. Section includes: Food service equipment including accessories for Kitchen 105.

B. Related sections:

1. Section 05 50 00 - Metal Fabrications: Stainless steel counter tops for pass through windows.

2. Section 08 33 13 - Coiling Counter Doors: Overhead coiling counter doors installed at pass through serving units and work table provided as part of this Section.

3. Section 10 28 13 - Toilet Accessories: Towel dispenser and soap dispensers to be installed at Kitchen hand washing sink and mop and broom holder provided for Kitchen.

4. Section 11 310 - Classroom Appliances: Kitchen appliances installed in Classroom B 117.

5. Division 22 - Plumbing and Division 23 - Heating, Ventilating, and Air-Conditioning (HVAC)l: Ductwork, service rough-ins, drain traps, atmospheric vents, valves, pipes, fittings, and other items required for connection of food service equipment.

6. Division 26 - Electrical: Connections to fire alarm system, wiring, disconnects, and other electrical material required for connections of food service equipment.

1.2 REFERENCES

A. American National Standards Institute:

1. ANSI Z97.1 - Safety Performance Specifications and Methods of Test for Safety Glazing Material Used in Buildings.

B. American Society of Heating, Refrigeration, and Air-Conditioning Engineers (ASHRAE):

1. ASHRAE 15 - Safety Code for Mechanical Refrigeration.

C. American Society of Mechanical Engineers (ASME):

1. ASME Boiler and Pressure Code.

D. American Society for Testing and Materials (ASTM):

1. ASTM A36 - Carbon Structural Steel.

2. ASTM A123 - Zinc (Hot-Dip Galvanized) Coatings on Iron and Steel Products.

3. ASTM A554 - Welded Stainless Steel Mechanical Tubing.

4. ASTM A653 - Steel Sheet Zinc Coated (Galvanized) or Zinc-Iron Alloy Coated (Galvannealed) by Hot-Dip Process.

5. ASTM A666 - Annealed or Cold Worked Austenitic Stainless Steel Strip, Plate, and Flat Bar.

6. ASTM C780 - Repair of Damaged and Uncoated Areas of Hot Dipped Galvanized Coatings.

7. ASTM C920 - Elastomeric Joint Sealants.

8. ASTM C1048 - Heat Treated Flat Glass, Kind HS, Kind FT, Coated and Uncoated.

E. CPSC 16 CFR 1201 - Consumer Product Safety Commission Safety Standard for Architectural Glazing Materials.

F. National Association of Architectural Metal Manufacturers (NAAMM):

1. Metal Finishes for Architectural and Metal Products.

G. National Fire Protection Association (NFPA):

1. NFPA 17 - Dry Chemical Extinguishing Systems.

2. NFPA 17A - Wet Chemical Extinguishing Systems.

3. NFPA 54 - National Fuel Gas Code.

4. NFPA 70 - National Electrical Code.

5. NFPA 96 - Ventilation Control and Fire Protection Commercial Cooking Operation.

H. National Sanitation Foundation (NSF) International Standards.

I. NEMA LD3 - High Pressure Decorative Laminates.

J. Sheet Metal and Air Conditioning Contractors National Association (SMACNA):

1. SMACNA Kitchen Equipment Fabrication Guidelines.

1.3 DEFINITIONS

A. Terms used in this Section and in Food Service Equipment Schedule on Drawings shall be as defined in NSF-2 - Food Equipment.

1.4 SUBMITTALS

A. Provide in accordance with Section 01 33 00 - Submittal Procedures:

1. Product data for manufactured appliances and equipment. Indicate type, selected options, performance characteristics, capacities, controls, configuration, sizes, materials, finishes, accessories, utility requirements, connections, and access and maintenance clearances.

2. Shop drawings:

   a. Enlarged floor plan indicating layout and placement of equipment, equipment item numbers, and access and maintenance clearances.

   b. Coordination drawings detailing concrete bases, floor depression, utility connections, and details for attaching and connection to adjacent work.

   c. Details of custom fabricated items. Illustrate complicated parts in cut-away perspective.

   d. Dimensioned drawings of standard manufactured items as required for coordination with casework and other construction. Indicate methods of anchoring and attachment.

   e. Wiring diagrams.

   f. Piping diagrams.

3. Manufacturer's installation, start-up, and other special procedures.

4. Samples of finishes for selection by Architect.

5. Manufacturer's certificates showing compliance with Paragraph 1.5.

6. Provide in accordance with Section 01 33 00 - Submittal Procedures and Section 01 78 00 - Closeout Submittals operation and maintenance manuals for all food service equipment provided.

1.5 QUALITY ASSURANCE

A. Manufacturers: Companies specializing in manufacturing food service equipment with 5 years minimum successful experience.

B. Fabricator: Company specializing in fabricating custom equipment similar to items of this Section with 3 years minimum successful experience.

C. Installer: Specialized in installation of food service equipment of similar nature to this Project with 3 years minimum successful experience.

D. Food service equipment shall be manufactured and installed in accordance with:

   1. American National Standards Institute (ANSI) applicable standards for electric-powered and gas-burning appliances, piping to compressed-gas cylinders, plumbing fittings, and vacuum breakers and air gaps to prevent siphonage in water piping.

   2. AGA - American Gas Association requirements. Provide gas burning appliances with AGA certification.

   3. ASME Boiler and Pressure Code.

   4. ASHRAE 15.

   5. NFPA 17, 17A, 54, 70, and 96.

6. National Sanitation Foundation (NSF) International Standards and Criteria. Provide NSF Certification Mark on each equipment item.

7. SMACNA Kitchen Equipment Fabrication Guidelines.

E. Electrical wiring and components shall conform to Underwriters' Laboratories (UL), Inc. or other Nationally Recognized Testing Laboratory (NRTL) as defined in OSHA Regulation 1910.7. Components shall bear certification labels.

1.6 PRE-INSTALLATION CONFERENCE

A. In accordance with Section 01 31 00 - Project Management and Coordination, convene a pre-installation conference at the site prior to commencing work of this Section.

B. Require attendance of entities directly concerned with food service equipment including manufacturer's representative.

C. Review at meeting:

1. Equipment delivery and installation schedule.

2. Access requirements for equipment delivery.

3. Equipment storage and security requirements.

4. Condition of substrates and other preparatory work.

5. Structural loading limitations.

6. Installation procedures and manufacturer's recommendations.

7. Availability of system materials.

8. Protection of installed items and finishes.

9. Other items related to successful execution of work.

1.7 DELIVERY, STORAGE, AND HANDLING

A. Deliver food service equipment as factory assembled units with protective crating and coverings.

B. Store equipment in original protective crating and coverings in dry location.

PART 2 - PRODUCTS

2.1 ACCEPTABLE MANUFACTURERS

A. Manufacturers of specific items of food service equipment as listed in Food Service Equipment Schedule on Drawings are acceptable and their products are listed in Schedule to establish requirements for product type, characteristics, performance, and quality:

1. Advance Tabco, 800-527-0353; www.advancedtabco.com.

2. American Range.

3. Bobrick.

4. Duke Manufacturing Company, St. Louis, Missouri; 800-753-3853; www.dukemfg.com.

5. Jackson Tempstar.

6. Metro Shelving.

7. Pacific Stainless.

8. Rubbermaid.

9. Salvajor.

10. Scotsman.

11. T and S Brass.

12. True.

B. Requests to use equivalent products of other manufacturers shall be submitted in accordance with Section 01 25 13 - Product Substitution Procedures.

2.2 MATERIALS

A. Stainless steel sheet, strip, plate, and flat bar: ASTM A666, Type 304, commercial grade, stretcher leveled.

B. Stainless steel tube: ASTM A554, Grade MT-304.

C. Galvanized steel sheet: ASTM A653, cold rolled, stretcher leveled, chemically treated steel sheet with hot dipped galvanized coating G115 designation.

D. Galvanized steel shapes: ASTM A36 structural steel with hot dipped galvanized ASTM A123 coating.

E. Sealants: ASTM C920, Type S, Grade NS, Class 25, Use NT elastomeric sealant, NSF certified. When cured and washed, sealant shall meet requirements of FDA 21 CFR, Section 177.2600 for use in areas that come in contact with food. Color as selected by Architect from manufacturer's full range.

F. Backer rods: Close-cell polyethylene compressible rod in diameter larger than joint width.

G. Fully tempered glass: Heat tempered, annealed, clear glass complying with ASTM C1048, Kind FT, Condition A, Type I, Quality q3. Fully tempered glass shall meet requirements of ANSI Z97.1 and CPSC 16 CFR to qualify as safety glass. Provide exposed, beveled safety edges.

H. Plastic laminate: NEMA LD 3, general purpose GP-50 with cleanable smooth texture. NSF certified and complying with NSF-35. Use 0.05 inch minimum thickness for horizontal and vertical surfaces and 0.042 inch for post-formed surfaces. Color as selected by Architect.

I. Plastic components other than plastic laminate: NSF-51.

J. Sound dampening: NSF certified, nonabsorbent, hard-drying, sound-deadening coating. Coating compounded for permanent adhesion to metal in 1/8 inch thickness that does not chip, flake, or blister.

K. Gaskets: NSF certified resilient rubber, neoprene, or PVC that is nontoxic, stable, odorless, non-absorbent, and unaffected by exposure to foods, oil, fats, water, detergents, cleaning compounds, and sunlight.

L. Cabinet hardware: NSF certified, stainless steel.

M. Casters: NSF certified, standard duty, stainless steel, swivel stem casters with 5 inch diameter by 1 inch wide wheels with polyurethane tires. 220 pounds capacity per caster. Provide brakes on two casters per unit.

2.3 EQUIPMENT

A. Provide food service equipment of the characteristics, capacities, sizes, and quantities listed in Kitchen Equipment Schedule on Drawings.

B. Provide equipment with rough-in hardware, supports and connections, attachment devices, closure trim, and accessories.

2.4 GENERAL FABRICATION

A. Field verify dimensions prior to preparation of shop drawings and fabrication. Where dimensions cannot be made without delaying work, establish required dimensions and proceed with fabrication without field measurements. Coordinate construction to ensure actual dimensions correspond to established dimensions.

B. Fabricate food service equipment in accordance with NSF-2. Factory assemble equipment to greatest extent possible.

C. Field assembled equipment: Prepare for field joining with methods indicated on Drawings and approved shop drawings. For metal butt joints comply with SMACNA standards unless otherwise indicated.

D. Bends: Form metal break bends without flaky, scaly, or cracked appearance. When breaks mar surface, remove marks by grinding, polishing, and finishing.

E. Sheared metal edges: Finish free of sharp edges, burrs, fins, and irregular projections.

F. Welding: Use welding rod of same composition as metal being welded. Use methods that minimize distortion and develop strength and corrosion resistance of base metal. Provide ductile welds free of mechanical imperfections such as gas holes, pits, and cracks.

1. Butt joints: Full penetration welds for full joint length. Make joints flat, continuous, and homogenous with sheet metal without relying on straps under seams, filling in with solder, or spot welding.

2. Grind exposed welded joints flush with adjoining material and polish to match adjoining surfaces.

3. Where fasteners are welded to underside of equipment, finish reverse side of weld smooth and undepressed.

4. Coat concealed stainless steel welded joints with suitable metallic based paint to prevent corrosion.

5. Galvanized steel welds: In accordance with ASTM C780, clean welds and abraded areas and apply SSPC-20 galvanizing repair paint with high zinc dust content.

G. Fasteners:

1. Fasteners in food zone shall be concealed in accordance with NSF-2.

2. Cap exposed fastener threads, including those inside cabinets, with stainless steel lock washers and stainless steel cap (acorn) nuts.

3. Where stainless steel is joined to dissimilar metal, use stainless steel fasteners for stainless steel welding material.

H. Pipe slots: Provide with turned-up edges and sized to accommodate service and utility lines and mechanical connections.

I. Enclosures: Provide panels, housings, skirts and other enclosures to conceal service lines, operating components, and mechanical and electrical devices including those inside cabinets.

J. Seismic restraints: Fabricate to comply with SMACNA standards and requirements for Seismic Zone 2b.

2.5 STAINLESS STEEL EQUIPMENT

A. Edges and backsplashes: Provide equipment with edges and backsplashes as indicated on approved shop drawings and in compliance with SMACNA standards.

B. Sound deadening: Apply to underside of sinks and metal work surfaces. Coating to have smooth surface. Hold coating back 1 inch from open edges to allow for cleaning.

C. Tables: Fabricate with reinforced tops, legs, and undershelves and cross bracing to comply with SMACNA standards.

1. Tops: 0.0781 inch minimum thickness stainless steel tube.

2. Legs: 1-5/8 inch diameter, 0.0625 inch minimum thickness stainless steel with stainless steel gusset and adjustable insert bullet type feet with minimum 1 inch adjustments up and down without exposing threads.

3. Undershelves: 0.625 inch minimum thickness stainless steel.

4. Top and undershelf reinforcement: 0.0178 inch thick stainless steel reinforcing.

5. Cross bracing: 1-1/4 inch diameter, minimum 0.0625 inch minimum thickness stainless steel tube.

D. Sinks: Fabricate from 0.078 inch minimum thickness stainless steel as fully welded one-piece construction. Fabricate two sides and bottom from one sheet with ends welded integral without overlapping joints or open spaces between compartments. Provide double wall partitions between compartments with 1/2 inch radius rounded tops welded integral with sink body. Cove horizontal, vertical, and interior corners with 3/4 inch radius. Pitch and crease sinks to waste for drainage without pooling. Seat wastes in die-stamped depressions without solder, rivets, or welding.

1. Wastes: 2 inch diameter nickel plated bronze, rotary handle waste assembly with stainless steel strainer plate and nickel plated bronze connected overflow.

2. Drainboards: 0.0781 inch minimum thickness pitched to sink at 1/8 inch per 12 inches of length. Reinforce drainboards with 0.0781 inch minimum thickness stainless steel.

3. Legs: 1-5/8 inch diameter, 0.0625 inch minimum thickness stainless steel with stainless steel gusset welded to 0.1094 inch thick stainless steel support plate. Provide adjustable insert bullet type feet with minimum 1 inch adjustments up and down without exposing threads.

4. Drainboard braces: 1 inch diameter 0.0625 inch minimum thickness stainless steel.

5. Cross bracing: 1-1/4 inch diameter, minimum 0.0625 inch minimum thickness stainless steel.

2.6 EXHAUST HOOD FABRICATION

A. Fabricate hoods from 0.050 inch minimum thickness stainless steel to comply with NFPA 96 and other applicable regulatory requirements.

B. Grease removal: Provide removable, stainless steel, baffle type grease filters with spring-loaded fastening. Fabricate filter frame and removable collection basins and troughs from 0.0781 inch minimum thickness stainless steel.

C. Light fixtures: NSF certified fixtures with lamps, vapor-tight sealed lenses, and wiring in stainless steel conduit on hood exterior.

D. Exhaust duct collars: Fabricate from 0.0625 inch minimum thickness stainless steel.

2.7 FACTORY APPLIED STAINLESS STEEL FINISHES

A. Stainless steel finishes to comply with NAAMM - Metal Finishes for Architectural Metal Products.

B. After fabrications, remove and blend tool and die marks and stretch lines into finish. Grind and polish surfaces to produce uniform, directional textured, polished finish, free of cross scratches. Run grain with long dimension of each piece.

1. Section surfaces: No. 2B bright, cold-rolled, unpolished finish.

2. Exposed surfaces: No. 4 bright, directional polish.

C. When polishing is complete, passivate and rinse surfaces. Remove embedded foreign matter and leave surfaces chemically clean.

D. Protect mechanical finishes on exposed surfaces from damage by applying strippable, temporary protective covering before shipment.

PART 3 - EXECUTION

3.1 COORDINATION

A. Coordinate equipment with layout of light fixtures, HVAC equipment, fire-suppression system components, and other work.

B. Coordinate requirements for positive slope to drains with Section 03 30 00 - Cast-in-Place Concrete.

C. Coordinate locations and requirements for utility connections.

D. Coordinate requirements for roof penetrations and equipment curbs with Section 07 54 00 - Thermoplastic Membrane Roofing.

E. Coordinate installation of equipment with application of wall and floor finishes specified in:

1. Section 03 35 30 - Concrete Floor Finishes: Sealed concrete floor.

2. Section 05 50 00 - Metal Fabrications: Stainless steel counter tops for pass through windows.

3. Section 09 21 16 - Gypsum Board Assemblies: Fiber reinforced plastic coated wall panels.

4. Section 09 76 10 - Fiber Reinforced Plastic Coated Panels.

5. Section 09 77 70 - Stainless Steel Wall Finish.

6. Section 09 91 00 - Painting.

3.2 PREPARATION

A. Prior to installation, verify that rough-ins, dimensions, and other conditions are such that equipment can be properly installed.

B. Verify that electric power is available and of correct characteristics.

3.3 INSTALLATION

A. Install food service equipment in accordance with applicable codes, manufacturer's instructions, and approved shop drawings.

B. Clearances: Install equipment with access and maintenance clearances in accordance with manufacturer's instruction, approved shop drawings, and regulatory requirements.

C. Field assembly:

1. Provide closed butt and contact joints that do not require filler.

2. Grind field welds on stainless steel equipment smooth and polish to match adjacent finish.

D. Cutouts: Where required for service lines and connections, neatly form cutouts.

E. Insulate components to prevent electrolysis between dissimilar metals.

F. Attachment: Except for mobile and adjustable leg equipment, securely anchor and attach items to walls, floors and bases with stainless steel anchoring devices appropriate for equipment and expected usage.

G. Sealant:

1. Install cabinets and similar equipment on concrete in bed of sealant.

2. Install trim strips and similar items requiring fasteners in bed of sealant. Space fasteners at 48 inches maximum.

3. Provide sealant to achieve clean joint with adjacent building finishes and between abutting components. Provide airtight, watertight, vermin-proof, sanitary joints.

H. Hoods: Comply with NFPA 96. Install to remain free from vibration when operating.

I. Seismic restraints: Install in accordance to SMACNA standards.

3.4 STARTUP AND ADJUSTMENT

A. Perform starting, monitoring, and adjusting food service equipment.

B. Coordinate startup of food service equipment with testing of service utilities. Do not operate steam lines before they have been cleaned and sanitized.

C. Adjust equipment to ensure proper operation.

D. Put each item through complete operating cycle. Verify proper installation, operation, capacities, and that there is not excessive noise or vibration. Adjust equipment for proper operation.

E. Refrigeration equipment: Test ability to maintain specified operation temperature under heavy use conditions.

F. Controls and safety devices: Test to verify operation and adjust.

G. Motors and rotating equipment: Test to verify proper rotation. Lubricate moving parts according to manufacturer's instructions.

H. Water, drain, gas, steam, oil, refrigerant, and other liquid carrying components: Test for leaks.

I. Correct deficiencies. Repair or replace damaged, malfunctioning, or defective equipment.

3.5 CLEANING

A. Remove temporary labels, masking, and protective coverings.

B. Thoroughly wash, clean, and polish equipment.

3.6 DEMONSTRATION AND TRAINING

A. Demonstrate food service equipment to Owner's designated representatives and instruct them in operation and maintenance.

1. Include procedures for startup and shutdown, troubleshooting, servicing, and preventative maintenance for each piece of equipment.

2. Review data contained in operation and maintenance manuals.

B. Schedule demonstration and training session with Owner and Architect.

END OF SECTION

SECTION 21 13 13

AUTOMATIC SPRINKLER SYSTEMS

PART 1 - GENERAL

1.01 RELATED DOCUMENTS

A. Drawings and general provisions of the Contract, including General and Supplementary Conditions and Division 01 Specification Sections, apply to this Section.

1.02 SUMMARY

A. The fire suppression system for the new Commons/Kitchen building is to be an expansion of the Administration Building fire service.

B. Section Includes:

1. Pipes, fittings, and specialties.
2. Fire-protection valves.
3. Sprinklers.
4. Alarm devices.
5. Manual control stations.
6. Control panels.
7. Pressure gages.

1.03 REFERENCES

A. General:

1. The following documents form part of the Specifications to the extent stated. Where differences exist between codes and standards, the one affording the greatest protection shall apply.
2. Unless otherwise noted, the referenced standard edition is the current one at the time of commencement of the Work.

B. American Society of Mechanical Engineers (ASME)

1. ASME-B-16.3 Malleable Iron Threaded Fittings Classes 150 and 300
2. ASME-B-16.5 Pipe Flanges and Flanged Fittings: NPS 1/2 through 24
3. ASME-B-16.9 Factory-Made Wrought Steel Buttwelding Fittings

4. ASME-B-16.11 Forged Fittings, Socket-Welding and Threaded

5. ASME-B-16.18 Cast Copper Alloy Solder Joint Pressure Fittings

6. ASME-B-16.22 Wrought Copper and Copper Alloy Solder Joint Pressure Fittings

7. ASME-B-16.25 Buttwelding Ends

8. ASME-B-36.10M Welded and Seamless Wrought Steel Pipe

C. ASTM International:

1. ASTM A47 / A47M Standard Specification for Ferritic Malleable Iron Castings

2. ASTM A53 / A53M Standard Specification for Pipe, Steel, Black and Hot-Dipped, Zinc-Coated, Welded and Seamless

3. ASTM A135 / A135M Standard Specification for Electric-Resistance-Welded Steel Pipe

4. ASTM-A-234 Piping Fittings of Wrought Carbon Steel and Alloy Steel for Moderate and Elevated Temperatures

5. ASTM-B-32 Standard Specification for Solder Metal

6. ASTM-B-75 Standard Specification for Seamless Copper Tube

7. ASTM-B-88 Standard Specification for Seamless Copper Water Tube

8. ASTM-B-251 Standard Specification for General Requirements for Wrought Seamless Copper and Copper-Alloy Tube

D. American Water Works Association (AWWA):

1. AWWA-C-110 Ductile-Iron and Gray-Iron Fittings

2. AWWA-C-151 Ductile-Iron Pipe, Centrifugally Cast

E. American Welding Society AWS-A-5.8 Filler Metals of Brazing

F. Code of Federal Regulations 29 CFR 1910.7 Definitions and Requirements for a Nationally Recognized Testing Laboratory (NRTL)

G. National Electrical Manufacturers Association (NEMA)

1. NEMA 250 Enclosures for Electrical Equipment (1000 Volt Maximum)

2. NEMA MG1 Motors and Generators

H. American Society of Mechanical Engineers ASME BPVC Boiler and Pressure Vessel Code, Welding and Sec IX Brazing Qualifications

I. American Welding Society AWS D10.9 Qualification of Welding Procedures and Welders for Piping and Tubing

J. National Fire Protection Association (NFPA)

1. NFPA 13 Installation of Sprinkler Systems

1.04 DEFINITIONS

A. High-Pressure Sprinkler Piping: Wet-pipe sprinkler system piping designed to operate at working pressure higher than standard 175 psig, but not higher than 250 psig.

B. Standard-Pressure Sprinkler Piping: Wet-pipe sprinkler system piping designed to operate at working pressure of 175 psig maximum.

1.05 SYSTEM DESCRIPTIONS

A. Wet-Pipe Sprinkler System: Automatic sprinklers are attached to piping containing water and that is connected to water supply through alarm valve. Water discharges immediately from sprinklers when they are opened. Sprinklers open when heat melts fusible link or destroys frangible device. Hose connections are included if indicated.

1.06 DESIGN

A. System shall provide coverage for building areas noted.

B. Coordinate with the owner and/or fire department the available water flow/pressure testing data of existing fire protection water supplies.

C. Interface system with building fire and smoke alarm system.

D. Provide system to NFPA 13 Ordinary Hazard, Group 2 occupancy requirements.

E. Provide fire department connection as indicated on the drawings.

F. System to operate at 7500 feet altitude.

G. Maximum flow in branch lines to be less than 20 fps.

H. Protect automatic sprinkler system above grade to prevent pipe breakage in accordance with seismic design guidance in NFPA 13.

1.07 PERFORMANCE REQUIREMENTS

A. Standard-Pressure Piping System Component: Listed for 175-psig minimum working pressure.

B. Delegated Design: Design sprinkler system(s), including comprehensive engineering analysis by a qualified professional engineer, using performance requirements and design criteria indicated.

1. Obtain fire-hydrant flow test records from Site work design team.

C. Sprinkler system design shall be approved by authorities having jurisdiction.

1. Margin of Safety for Available Water Flow and Pressure: 10 percent, including losses through water-service piping, valves, and backflow preventers.

2. Sprinkler Occupancy Hazard Classifications: per NFPA 13

D. Seismic Performance: Sprinkler piping shall withstand the effects of earthquake motions determined according to NFPA 13.

1.08 SUBMITTALS

A. Product Data: For each type of product indicated. Include rated capacities, operating characteristics, electrical characteristics, and furnished specialties and accessories.

B. Shop Drawings: For wet-pipe sprinkler systems. Include plans, elevations, sections, details, and attachments to other work.

1. Wiring Diagrams: For power, signal, and control wiring.

C. LEED Submittal:

1. Product Data for Credit Low Emitting Materials EQ Credit: For solvent cements and adhesive primers, including printed statement of VOC content and chemical components.

D. Delegated-Design Submittal: For sprinkler systems indicated to comply with performance requirements and design criteria, including analysis data signed and sealed by the qualified professional engineer responsible for their preparation.

E. Coordination Drawings: Sprinkler systems, drawn to scale, on which the following items are shown and coordinated with each other, using input from installers of the items involved:

1. Domestic water piping.

2. Compressed air piping.

3. HVAC hydronic piping.

4. Items penetrating finished ceiling include the following:

a. Lighting fixtures.
b. Air outlets and inlets.

F. Qualification Data: For qualified Installer

G. Approved Sprinkler Piping Drawings: Working plans, prepared according to NFPA 13, that have been approved by authorities having jurisdiction, including hydraulic calculations if applicable.

H. Welding certificates.

I. Fire-hydrant flow test report.

J. Field Test Reports and Certificates: Indicate and interpret test results for compliance with performance requirements and as described in NFPA 13. Include "Contractor's Material and Test Certificate for Aboveground Piping."

K. Field quality-control reports.

L. Operation and Maintenance Data: For sprinkler specialties to include in emergency, operation, and maintenance manuals.

1.09 QUALITY ASSURANCE

A. Installer Qualifications:

1. Installer's responsibilities include designing, fabricating, and installing sprinkler systems and providing professional engineering services needed to assume engineering responsibility. Base calculations on results of fire-hydrant flow test.

a. Engineering Responsibility: Preparation of working plans, calculations, and field test reports by a qualified professional engineer.

B. Welding Qualifications: Qualify procedures and operators according to ASME Boiler and Pressure Vessel Code.

C. Electrical Components, Devices, and Accessories: Listed and labeled as defined in NFPA 70, by a qualified testing agency, and marked for intended location and application.

D. NFPA Standards: Sprinkler system equipment, specialties, accessories, installation, and testing shall comply with the following:

1. NFPA 13, "Installation of Sprinkler Systems."

2. NFPA 13R, "Installation of Sprinkler Systems in Residential Occupancies up to and Including Four Stories in Height."

3. NFPA 24, "Installation of Private Fire Service Mains and Their Appurtenances."

1.10 PROJECT CONDITIONS

A. Interruption of Existing Sprinkler Service: Do not interrupt sprinkler service to facilities occupied by Owner or others unless permitted under the following conditions and then only after arranging to provide temporary sprinkler service according to requirements indicated:

1. Notify Architect no fewer than two days in advance of proposed interruption of sprinkler service.

2. Do not proceed with interruption of sprinkler service without Architect's written permission.

1.11 COORDINATION

A. Coordinate layout and installation of sprinklers with other construction that penetrates ceilings, including light fixtures, HVAC equipment, and partition assemblies.

1.12 EXTRA MATERIALS

A. Furnish extra materials that match products installed and that are packaged with protective covering for storage and identified with labels describing contents.

1. Sprinkler Cabinets: Finished, wall-mounted, steel cabinet with hinged cover, and with space for minimum of six spare sprinklers plus sprinkler wrench. Include number of sprinklers required by NFPA 13 and sprinkler wrench. Include separate cabinet with sprinklers and wrench for each type of sprinkler used on Project.

PART 2 - PRODUCTS

2.01 PIPING MATERIALS

A. Comply with requirements in "Piping Schedule" Article for applications of pipe, tube, and fitting materials, and for joining methods for specific services, service locations, and pipe sizes.

2.02 STEEL PIPE AND FITTINGS

A. Standard Weight, Galvanized and Black-Steel Pipe: ASTM A 53/A 53M, Type E. Pipe ends may be factory or field formed to match joining method.

B. Schedule 30, Galvanized and Black-Steel Pipe: ASTM A 135; ASTM A 795/A 795M, or ASME B36.10M, wrought steel; with wall thickness not less than Schedule 30 and not more than Schedule 40. Pipe ends may be factory or field formed to match joining method.

C. Thinwall Galvanized and Black-Steel Pipe: ASTM A 135 or ASTM A 795/A 795M, threadable, with wall thickness less than Schedule 30 and equal to or greater than Schedule 10. Pipe ends may be factory or field formed to match joining method.

D. Schedule 10, Black-Steel Pipe: ASTM A 135 or ASTM A 795/A 795M, Schedule 10 in NPS 5 and smaller; and NFPA 13-specified wall thickness in NPS 6 to NPS 10, plain end.

E. Nonstandard OD, Thinwall Black-Steel Pipe: ASTM A 135 or ASTM A 795/A 795M, thinwall, with plain ends and wall thickness less than Schedule 10.

F. Hybrid Black-Steel Pipe: ASTM A 135 or ASTM A 795/A 795M, lightwall, with wall thickness less than Schedule 10 and greater than Schedule 5.

G. Schedule 5 Steel Pipe: ASTM A 135 or ASTM A 795/A 795M, lightwall, with plain ends.

H. Galvanized and Black-Steel Pipe Nipples: ASTM A 733, made of ASTM A 53/A 53M, standard-weight, seamless steel pipe with threaded ends.

I. Galvanized and Uncoated, Steel Couplings: ASTM A 865, threaded.

J. Galvanized and Uncoated, Gray-Iron Threaded Fittings: ASME B16.4, Class 125, standard pattern.

K. Malleable-or Ductile-Iron Unions: UL 860.

L. Cast-Iron Flanges: ASME 16.1, Class 125.

M. Steel Flanges and Flanged Fittings: ASME B16.5, Class 150.

N. Steel Welding Fittings: ASTM A 234/A 234M and ASME B16.9.

O. Grooved-Joint, Steel-Pipe Appurtenances:

1. Manufacturers: Subject to compliance with requirements, provide products by one of the following:

   a. Anvil International, Inc.
   b. Corcoran Piping System Co.
   c. National Fittings, Inc.
   d. Shurjoint Piping Products.
   e. Tyco Fire & Building Products LP.
   f. Victaulic Company.

2. Pressure Rating: 175 psig minimum.

3. Galvanized and Uncoated, Grooved-End Fittings for Steel Piping: ASTM A 47/A 47M, malleable-iron casting or ASTM A 536, ductile-iron casting; with dimensions matching steel pipe.

4. Grooved-End-Pipe Couplings for Steel Piping: AWWA C606 and UL 213, rigid pattern, unless otherwise indicated, for steel-pipe dimensions. Include ferrous housing sections, EPDM-rubber gasket, and bolts and nuts.

P. Steel Pressure-Seal Fittings: UL 213, FM-approved, 175-psig pressure rating with steel housing, rubber O-rings, and pipe stop; for use with fitting manufacturers' pressure-seal tools.

1. Manufacturers: Subject to compliance with requirements, provide products by one of the following:

   a. Victaulic Company.

2.03 PIPING JOINING MATERIALS

A. Pipe-Flange Gasket Materials: AWWA C110, rubber, flat face, 1/8 inch thick ASME B16.21, nonmetallic and asbestos free.

1. Class 125, Cast-Iron Flanges and Class 150, Bronze Flat-Face Flanges: Full-face gaskets.

2. Class 250, Cast-Iron Flanges and Class 300, Steel Raised-Face Flanges: Ring-type gaskets.

B. Metal, Pipe-Flange Bolts and Nuts: ASME B18.2.1, carbon steel unless otherwise indicated.

C. Brazing Filler Metals: AWS A5.8/A5.8M, BCuP Series, copper-phosphorus alloys for general-duty brazing unless otherwise indicated.

D. Welding Filler Metals: Comply with AWS D10.12M/D10.12 for welding materials appropriate for wall thickness and chemical analysis of steel pipe being welded.

E. Solvent Cements for Joining CPVC Piping and Tubing: ASTM F 493, solvent cement recommended by pipe and fitting manufacturer, and made for joining CPVC sprinkler pipe and fittings. Include cleaner or primer recommended by pipe and fitting manufacturer.

1. Use solvent cement that has a VOC content of 490 g/L or less when calculated according to 40 CFR 59, Subpart D (EPA Method 24).

2. Use adhesive primer that has a VOC content of 650 g/L or less when calculated according to 40 CFR 59, Subpart D (EPA Method 24).

F. Plastic, Pipe-Flange Gasket, and Bolts and Nuts: Type and material recommended by piping system manufacturer unless otherwise indicated.

2.04 COVER SYSTEM FOR SPRINKLER PIPING

A. Manufacturers: Subject to compliance with requirements, provide products by one of the following:

1. DecoShield Systems, Inc.

B. Description: System of support brackets and covers made to protect sprinkler piping.

C. Brackets: Glass-reinforced nylon.

D. Covers: Extruded PVC sections of length, shape, and size required for size and routing of CPVC piping.

2.05 LISTED FIRE-PROTECTION VALVES

A. General Requirements:

1. Valves shall be UL listed or FM approved.

2. Minimum Pressure Rating for Standard-Pressure Piping: 175 psig.

3. Minimum Pressure Rating for High-Pressure Piping: 250 psig 300 psig.

B. Ball Valves:

1. Manufacturers: Subject to compliance with requirements, provide products by one of the following:

2. Basis-of-Design Product: Subject to compliance with requirements, provide product indicated on Drawings comparable product by one of the following:

   a. Anvil International, Inc.
   b. Victaulic Company.

3. Standard: UL 1091 except with ball instead of disc.

4. Valves NPS 1-1/2 and Smaller: Bronze body with threaded ends.

5. Valves NPS 2 and NPS 2-1/2: Bronze body with threaded ends or ductile-iron body with grooved ends.

6. Valves NPS 3: Ductile-iron body with grooved ends.

C. Bronze Butterfly Valves:

1. Manufacturers: Subject to compliance with requirements, provide products by one of the following:

2. Basis-of-Design Product: Subject to compliance with requirements, provide product indicated on Drawings or comparable product by one of the following:

   a. Fivalco Inc.
   b. Global Safety Products, Inc.
   c. Milwaukee Valve Company.

3. Standard: UL 1091.

4. Pressure Rating: 175 psig.

5. Body Material: Bronze.

6. End Connections: Threaded.

D. Iron Butterfly Valves:

1. Manufacturers: Subject to compliance with requirements, provide products by one of the following:

2. Basis-of-Design Product: Subject to compliance with requirements, provide product indicated on Drawings or comparable product by one of the following:

a. Anvil International, Inc.
b. Fivalco Inc.
c. Global Safety Products, Inc.
d. Kennedy Valve; a division of McWane, Inc.
e. Milwaukee Valve Company.
f. NIBCO INC.
g. Pratt, Henry Company.
h. Shurjoint Piping Products.
i. Tyco Fire & Building Products LP.
j. Victaulic Company.

3. Standard: UL 1091.

4. Pressure Rating: 175 psig.

5. Body Material: Cast or ductile iron.

6. Style: Lug or wafer.

7. End Connections: Grooved.

E. Check Valves:

1. Basis-of-Design Product: Subject to compliance with requirements, provide product indicated on Drawings comparable product by one of the following:

a. AFAC Inc.
b. American Cast Iron Pipe Company; Waterous Company Subsidiary.
c. Anvil International, Inc.
d. Clow Valve Company; a division of McWane, Inc.
e. Crane Co.; Crane Valve Group; Crane Valves.
f. Crane Co.; Crane Valve Group; Jenkins Valves.
g. Crane Co.; Crane Valve Group; Stockham Division.
h. Fire-End & Croker Corporation.
i. Fire Protection Products, Inc.
j. Fivalco Inc.
k. Globe Fire Sprinkler Corporation.
l. Groeniger & Company.
m. Kennedy Valve; a division of McWane, Inc.
n. Matco-Norca.
o. Metraflex, Inc.
p. Milwaukee Valve Company.
q. Mueller Co.; Water Products Division.
r. NIBCO INC.
s. Potter Roemer.
t. Reliable Automatic Sprinkler Co., Inc.
u. Shurjoint Piping Products.
v. Tyco Fire & Building Products LP.
w. United Brass Works, Inc.
x. Venus Fire Protection Ltd.
y. Victaulic Company.
z. Viking Corporation. aa. Watts Water Technologies, Inc.

2. Standard: UL 312.

3. Pressure Rating: 250 psig minimum 300 psig.

4. Type: Swing check.

5. Body Material: Cast iron.

6. End Connections: Flanged or grooved.

F. Bronze OS&Y Gate Valves:

1. Basis-of-Design Product: Subject to compliance with requirements, provide product indicated on Drawings product by one of the following:

   a. Crane Co.; Crane Valve Group; Crane Valves.
   b. Crane Co.; Crane Valve Group; Stockham Division.
   c. Milwaukee Valve Company.
   d. NIBCO INC.
   e. United Brass Works, Inc.

2. Standard: UL 262.

3. Pressure Rating: 175 psig.

4. Body Material: Bronze.

5. End Connections: Threaded.

G. Iron OS&Y Gate Valves:

1. Basis-of-Design Product: Subject to compliance with requirements, provide product indicated on Drawings or comparable product by one of the following:

   a. American Cast Iron Pipe Company; Waterous Company Subsidiary.
   b. American Valve, Inc.
   c. Clow Valve Company; a division of McWane, Inc.
   d. Crane Co.; Crane Valve Group; Crane Valves.
   e. Crane Co.; Crane Valve Group; Jenkins Valves.
   f. Crane Co.; Crane Valve Group; Stockham Division.
   g. Hammond Valve.
   h. Milwaukee Valve Company.
   i. Mueller Co & Water Products Division.
   j. NIBCO INC.
   k. Shurjoint Piping Products.
   l. Tyco Fire & Building Products LP.
   m. United Brass Works, Inc.
   n. Watts Water Technologies, Inc.

2. Standard: UL 262.

3. Pressure Rating: 250 psig minimum 300 psig.

4. Body Material: Cast or ductile iron.

5. End Connections: Flanged or grooved.

H. Indicating-Type Butterfly Valves:

1. Basis-of-Design Product: Subject to compliance with requirements, provide product indicated on Drawings or comparable product by one of the following:

   a. Anvil International, Inc.
   b. Fivalco Inc.
   c. Global Safety Products, Inc.
   d. Kennedy Valve; a division of McWane, Inc.
   e. Milwaukee Valve Company.
   f. NIBCO INC.
   g. Shurjoint Piping Products.
   h. Tyco Fire & Building Products LP.
   i. Victaulic Company.

2. Standard: UL 1091.

3. Pressure Rating: 175 psig minimum.

4. Valves NPS 2 and Smaller:

   a. Valve Type: Ball or butterfly.
   b. Body Material: Bronze.
   c. End Connections: Threaded.

5. Valves NPS 2-1/2 and Larger:

   a. Valve Type: Butterfly.
   b. Body Material: Cast or ductile iron.
   c. End Connections: Flanged, grooved, or wafer.

6. Valve Operation: Integral electrical, 115-V ac, prewired, single-circuit, supervisory switch indicating device.

I. NRS Gate Valves:

1. Basis-of-Design Product: Subject to compliance with requirements, provide product indicated on Drawings or comparable product by one of the following:

   a. American Cast Iron Pipe Company; Waterous Company Subsidiary.
   b. American Valve, Inc.
   c. Clow Valve Company; a division of McWane, Inc.
   d. Crane Co.; Crane Valve Group; Stockham Division.
   e. Kennedy Valve; a division of McWane, Inc.
   f. Mueller Co.; Water Products Division.
   g. NIBCO INC.
   h. Tyco Fire & Building Products LP.

2. Standard: UL 262.

3. Pressure Rating: 250 psig minimum 300 psig.

4. Body Material: Cast iron with indicator post flange.

5. Stem: Nonrising.

6. End Connections: Flanged or grooved.

J. Indicator Posts:

1. Basis-of-Design Product: Subject to compliance with requirements, provide product indicated on Drawings comparable product by one of the following:

a. American Cast Iron Pipe Company; Waterous Company Subsidiary.
b. American Valve, Inc.
c. Clow Valve Company; a division of McWane, Inc.
d. Crane Co.; Crane Valve Group; Stockham Division.
e. Kennedy Valve; a division of McWane, Inc.
f. Mueller Co.; Water Products Division.
g. NIBCO INC.
h. Tyco Fire & Building Products LP.

2. Standard: UL 789.

3. Type: Horizontal for wall mounting.

4. Body Material: Cast iron with extension rod and locking device.

5. Operation: Wrench.

2.06 TRIM AND DRAIN VALVES

A. General Requirements:

1. Standard: UL's "Fire Protection Equipment Directory" listing or "Approval Guide," published by FM Global, listing.

2. Pressure Rating: 175 psig minimum.

B. Angle Valves:

1. Manufacturers: Subject to compliance with requirements, provide products by one of the following:

a. Fire Protection Products, Inc.
b. United Brass Works, Inc.

C. Ball Valves:

1. Manufacturers: Subject to compliance with requirements, provide products by one of the following:

a. Affiliated Distributors.
b. Anvil International, Inc.
c. Barnett.
d. Conbraco Industries, Inc.; Apollo Valves.

e. Fire-End & Croker Corporation.
f. Fire Protection Products, Inc.
g. Flowserve.
h. FNW.
i. Jomar International, Ltd.
j. Kennedy Valve; a division of McWane, Inc.
k. Kitz Corporation.
l. Legend Valve.
m. Metso Automation USA Inc.
n. Milwaukee Valve Company.
o. NIBCO INC.
p. Potter Roemer.
q. Red-White Valve Corporation.
r. Southern Manufacturing Group.
s. Stewart, M. A. and Sons Ltd.
t. Tyco Fire & Building Products LP.
u. Victaulic Company.
v. Watts Water Technologies, Inc.

D. Globe Valves:

1. Manufacturers: Subject to compliance with requirements, provide products by one of the following:

a. Fire Protection Products, Inc.
b. United Brass Works, Inc.

E. Plug Valves:

1. Manufacturers: Subject to compliance with requirements, provide products by one of the following:

a. Southern Manufacturing Group.

2.07 SPECIALTY VALVES

A. General Requirements:

1. Standard: UL's "Fire Protection Equipment Directory"listing or "Approval Guide," published by FM Global, listing.

2. Pressure Rating:

a. Standard-Pressure Piping Specialty Valves: 175 psig minimum.
b. High-Pressure Piping Specialty Valves: 250 psig minimum 300 psig.

3. Body Material: Cast or ductile iron.

4. Size: Same as connected piping.

5. End Connections: Flanged or grooved.

B. Alarm Valves:

1. Basis-of-Design Product: Subject to compliance with requirements, provide product indicated on Drawings or comparable product by one of the following:
   a. AFAC Inc.
   b. Globe Fire Sprinkler Corporation.
   c. Reliable Automatic Sprinkler Co., Inc.
   d. Tyco Fire & Building Products LP.
   e. Venus Fire Protection Ltd.
   f. Victaulic Company.
   g. Viking Corporation.
2. Standard: UL 193.
3. Design: For horizontal or vertical installation.
4. Include trim sets for bypass, drain, electrical sprinkler alarm switch, pressure gages, retarding chamber, and fill-line attachment with strainer.
5. Drip Cup Assembly: Pipe drain without valves and separate from main drain piping.
6. Drip Cup Assembly: Pipe drain with check valve to main drain piping.

C. Automatic Ball Drip Drain Valves:

1. Basis-of-Design Product: Subject to compliance with requirements, provide product indicated on Drawings or comparable product by one of the following:
   a. AFAC Inc.
   b. Reliable Automatic Sprinkler Co., Inc.
   c. Tyco Fire & Building Products LP.
2. Standard: UL 1726.
3. Pressure Rating: 175 psig minimum.
4. Type: Automatic draining, ball check.
5. Size: NPS 3/4.
6. End Connections: Threaded.

2.08 SPRINKLER SPECIALTY PIPE FITTINGS

A. Branch Outlet Fittings:

1. Manufacturers: Subject to compliance with requirements, provide products by one of the following:
   a. Anvil International, Inc.
   b. National Fittings, Inc.
   c. Shurjoint Piping Products.
   d. Tyco Fire & Building Products LP.
   e. Victaulic Company.

2. Standard: UL 213.

3. Pressure Rating: 175 psig minimum 300 psig

4. Body Material: Ductile-iron housing with EPDM seals and bolts and nuts.

5. Type: Mechanical-T and -cross fittings.

6. Configurations: Snap-on and strapless, ductile-iron housing with branch outlets.

7. Size: Of dimension to fit onto sprinkler main and with outlet connections as required to match connected branch piping.

8. Branch Outlets: Grooved, plain-end pipe, or threaded.

B. Flow Detection and Test Assemblies:

1. Manufacturers: Subject to compliance with requirements, provide products by one of the following:

   a. AGF Manufacturing Inc.
   b. Reliable Automatic Sprinkler Co., Inc.
   c. Tyco Fire & Building Products LP.
   d. Victaulic Company.

2. Standard: UL's "Fire Protection Equipment Directory "listing or "Approval Guide," published by FM Global, listing.

3. Pressure Rating: 175 psig minimum 300 psig.

4. Body Material: Cast-or ductile-iron housing with orifice, sight glass, and integral test valve.

5. Size: Same as connected piping.

6. Inlet and Outlet: Threaded.

C. Branch Line Testers:

1. Manufacturers: Subject to compliance with requirements, provide products by one of the following:

   a. Elkhart Brass Mfg. Company, Inc.
   b. Fire-End & Croker Corporation.
   c. Potter Roemer.

2. Standard: UL 199.

3. Pressure Rating: 175 psig

4. Body Material: Brass.

5. Size: Same as connected piping.

6. Inlet: Threaded.

7. Drain Outlet: Threaded and capped.

8. Branch Outlet: Threaded, for sprinkler.

D. Sprinkler Inspector's Test Fittings:

1. Manufacturers: Subject to compliance with requirements, provide products by one of the following:

   a. AGF Manufacturing Inc.
   b. Triple R Specialty.
   c. Tyco Fire & Building Products LP.
   d. Victaulic Company.
   e. Viking Corporation.

2. Standard: UL's "Fire Protection Equipment Directory" listing or "Approval Guide," published by FM Global, listing.

3. Pressure Rating: 175 psig minimum 300 psig.

4. Body Material: Cast-or ductile-iron housing with sight glass.

5. Size: Same as connected piping.

6. Inlet and Outlet: Threaded.

E. Adjustable Drop Nipples:

1. Manufacturers: Subject to compliance with requirements, provide products by one of the following:

   a. CECA, LLC.
   b. Corcoran Piping System Co.
   c. Merit Manufacturing; a division of Anvil International, Inc.

2. Standard: UL 1474.

3. Pressure Rating: 250 psig minimum 300 psig.

4. Body Material: Steel pipe with EPDM-rubber O-ring seals.

5. Size: Same as connected piping.

6. Length: Adjustable.

7. Inlet and Outlet: Threaded.

F. Flexible, Sprinkler Hose Fittings:

1. Manufacturers: Subject to compliance with requirements, provide products by one of the following:

a. Fivalco Inc.
b. FlexHead Industries, Inc.

2. Standard: UL 1474.

3. Type: For areas with lay-in ceiling: Flexible hose for connection to sprinkler, and with bracket for connection to ceiling grid.

4. Pressure Rating: 175 psig minimum 300 psig.

5. Size: Same as connected piping, for sprinkler.

2.09 SPRINKLERS

A. Manufacturers: Subject to compliance with requirements, provide products by one of the following

1. AFAC Inc.

2. Globe Fire Sprinkler Corporation.

3. Reliable Automatic Sprinkler Co., Inc.

4. Tyco Fire & Building Products LP.

5. Venus Fire Protection Ltd.

6. Victaulic Company.

7. Viking Corporation.

B. General Requirements:

1. Standard: UL's "Fire Protection Equipment Directory" listing or "Approval Guide," published by FM Global, listing.

2. Pressure Rating for Residential Sprinklers: 175 psig maximum.

3. Pressure Rating for Automatic Sprinklers: 175 psig minimum.

4. Pressure Rating for High-Pressure Automatic Sprinklers: 250 psig minimum 300 psig.

5. Architect to select sprinkler head/trim color; coordinate with architect.

C. Automatic Sprinklers with Heat-Responsive Element:

1. Early-Suppression, Fast-Response Applications: UL 1767.

2. Nonresidential Applications: UL 199

3. Characteristics: Nominal 1/2-inch orifice with Discharge Coefficient K of 5.6, and for "Ordinary" temperature classification rating unless otherwise indicated or required by application.

D. Open Sprinklers with Heat-Responsive Element Removed: UL 199.

1. Characteristics:

a. Nominal 1/2-inch Orifice: With Discharge Coefficient K between 5.3 and 5.8

b. Nominal 17/32-inch Orifice: With Discharge Coefficient K between 7.4 and 8.2

E. Dry Type Pendant Sprinkler:

1. Early-Suppression, Fast-Response Applications: UL 1767.

2. Nonresidential Applications: UL 199

3. Characteristics: Nominal 1/2-inch orifice with Discharge Coefficient K of 5.6, and for "Ordinary" temperature classification rating unless otherwise indicated or required by application.

4. Designed for use in a wet-pipe system where sprinkler or connecting piping may be exposed to freezing conditions. Provide with assembly to seal at the main pipe to prevent water from entering the sprinkler assembly until the sprinkler operates. Install per manufacturer written instructions.

F. Sprinkler Finishes:

1. Chrome plated.

2. Bronze.

3. Painted.

G. Special Coatings:

1. Wax.

2. Lead.

3. Corrosion resistant paint

H. Sprinkler Escutcheons: Materials, types, and finishes for the following sprinkler mounting applications, escutcheons for concealed, flush, and recessed-type sprinklers

1. Ceiling Mounting: Chrome-plated steel, one piece, flat.

2. Sidewall Mounting: Chrome-plated steel, one piece, flat.

I. Sprinkler Guards:

1. Manufacturers: Subject to compliance with requirements, provide products by one of the following:
   a. Reliable Automatic Sprinkler Co., Inc.
   b. Tyco Fire & Building Products LP.
   c. Victaulic Company.
   d. Viking Corporation.
2. Standard: UL 199.
3. Type: Wire cage with fastening device for attaching to sprinkler.

2.10 ALARM DEVICES

A. Alarm-device types shall match piping and equipment connections.

B. Water-Motor-Operated Alarm
1. Manufacturers: Subject to compliance with requirements, provide products by one of the following:
   a. Globe Fire Sprinkler Corporation
   b. Tyco Fire & Building Products LP.
   c. Victaulic Company.
   d. Viking Corporation.
2. Standard: UL 753.
3. Type: Mechanical operated with Pelton wheel
4. Alarm Gong: Cast aluminum with red-enamel factory finish
5. Size: 10” Diameter.
6. Components: Shaft length, bearings, and sleeve to suit wall construction.
7. Inlet: NPS ¾.
8. Outlet: NPS 1 drain connection.

C. Electrically Operated Alarm Bell:
1. Manufacturers: Subject to compliance with requirements, provide products by one of the following:
   a. Fire-Lite Alarms, Inc.; A Honeywell company.
   b. Notifier; A Honeywell company.
   c. Potter Electric Signal Company.
2. Standard: UL 464.
3. Type: Vibrating, metal alarm bell.
4. Size: 6-inch minimum diameter.

5. Finish: Red-enamel factory finish suitable for outdoor use.

D. Water-Flow Indicators:

1. Manufacturers: Subject to compliance with requirements, provide products by one of the following:

   a. ADT Security Services, Inc.
   b. McDonnel & Miller; ITT Industries.
   c. Potter Electric Signal Company.
   d. System Sensor; a Honeywell company.
   e. Viking Corporation.
   f. Watts Industries Inc.

2. Standard: UL 364.

3. Water-Flow Detector: Electrically supervised.

4. Components: Two single-pole, double-throw circuit switches for isolated alarm and auxiliary contacts. 7A. 125-VAC and 0.25 A 24-V dc; complete with factory-set, field-adjustable retard element to prevent false signals and tamperproof cover that sends signal if removed.

5. Type: Paddle operated.

6. Pressure Rating: 250 psig.

7. Design Installation: Horizontal or Vertical.

E. Pressure Switches:

1. Manufacturers: Subject to compliance with requirements, provide products by one of the following:

   a. AFAC Inc.
   b. Barksdale, Inc.
   c. Detroit Switch, Inc.
   d. Potter Electric Signal Company.
   e. System Sensor; a Honeywell company.
   f. Tyco Fire & Building Products LP.
   g. United Electric Controls Co.
   h. Viking Corporation.

2. Standard: UL 346.

3. Type: Electrically supervised water flow switch with retard feature.

4. Components: Single-pole, double-throw switch with normally closed contacts.

5. Design Operation: Rising Pressure signals water flow.

F. Valve Supervisory Switches:

1. Manufacturers: Subject to compliance with requirements, provide products by one of the following:
   a. Fire-Lite Alarms, Inc.; A Honeywell company.
   b. Kennedy Valve; a division of McWane, Inc.
   c. Potter Electric Signal Company.
   d. System Sensor; a Honeywell company.
2. Standard: UL 346.
3. Type: Electrically supervised.
4. Components: Single-pole, double-throw switch with normally closed contacts.
5. Design: Signals that controlled valve is in other than fully open position.

G. Indicator-Post Supervisory Switches:
1. Manufacturers: Subject to compliance with requirements, provide products by one of the following :
   a. Potter Electric Signal Company.
   b. System Sensor; a Honeywell company.
2. Standard: UL 346.
3. Type: Electrically supervised.
4. Components: Single-pole, double-throw switch with normally closed contacts.
5. Design: Signals that controlled indicator-post valve is in other than fully open position.

2.11 2.14 MANUAL CONTROL STATIONS

A. Description: UL listed or FM approved, hydraulic operation, with union, NPS 1/2 pipe nipple, and bronze ball valve. Include metal enclosure labeled "MANUAL CONTROL STATION" with operating instructions and cover held closed by breakable strut to prevent accidental opening.

2.12 CONTROL PANELS

A. Description: Single-area, two-area, or single-area cross-zoned control panel as indicated, including NEMA ICS 6, Type 1 enclosure, detector, alarm, and solenoid-valve circuitry for operation of deluge valves. Panels contain power supply; battery charger; standby batteries; field-wiring terminal strip; electrically supervised solenoid valves and polarized fire-alarm bell; lamp test facility; single-pole, double-throw auxiliary alarm contacts; and rectifier.
1. Panels: UL listed and FM approved when used with thermal detectors and Class A detector circuit wiring. Electrical characteristics are 120-V ac, 60 Hz, with 24-V dc rechargeable batteries.

2. Manual Control Stations: Electric operation, metal enclosure, labeled "MANUAL CONTROL STATION" with operating instructions and cover held closed by breakable strut to prevent accidental opening.

3. Manual Control Stations: Hydraulic operation, with union, NPS 1/2 pipe nipple, and bronze ball valve. Include metal enclosure labeled "MANUAL CONTROL STATION" with operating instructions and cover held closed by breakable strut to prevent accidental opening.

2.13 PRESSURE GAGES

A. Manufacturers: Subject to compliance with requirements, provide products by one of the following :

1. AMETEK; U.S. Gauge Division.

2. Ashcroft, Inc.

3. Brecco Corporation.

4. WIKA Instrument Corporation.

B. Standard: UL 393.

C. Dial Size: 3-1/2-to 4-1/2-inch diameter.

D. Pressure Gage Range: 0 to 250 psig minimum.

E. Water System Piping Gage: Include "WATER" or "AIR/WATER" label on dial face.

F. Air System Piping Gage: Include retard feature and "AIR" or "AIR/WATER" label on dial face.

2.14 ESCUTCHEONS

A. General: Manufactured ceiling, floor, and wall escutcheons and floor plates.

B. One-Piece, Cast-Brass Escutcheons: Polished chrome-plated finish with set-screws.

C. One-Piece, Deep-Pattern Escutcheons: Deep-drawn, box-shaped brass with chrome-plated finish.

D. One-Piece, Stamped-Steel Escutcheons: Chrome-plated finish with set-screw.

E. Split-Casting, Cast-Brass Escutcheons: Polished chrome-plated finish with concealed hinge and setscrew.

F. Split-Plate, Stamped-Steel Escutcheons: Chrome-plated finish with concealed hinge.

G. One-Piece Floor Plates: Cast-iron flange with holes for fasteners.

H. Split-Casting Floor Plates: Cast brass with concealed hinge.

2.15 SLEEVES

A. Cast-Iron Wall Pipe Sleeves: Cast or fabricated of cast iron and equivalent to ductile-iron pressure pipe, with plain ends and integral waterstop unless otherwise indicated.

B. Galvanized-Steel-Sheet Sleeves: 0.0239-inch (0.6-mm) minimum thickness; round tube closed with welded longitudinal joint.

C. Molded-PE Sleeves: Reusable, PE, tapered-cup shaped, and smooth outer surface with nailing flange for attaching to wooden forms.

D. Molded-PVC Sleeves: Permanent, with nailing flange for attaching to wooden forms.

E. PVC-Pipe Sleeves: ASTM D 1785, Schedule 40.

F. Galvanized-Steel-Pipe Sleeves: ASTM A 53/A 53M, Type E, standard weight, zinc coated, plain ends.

G. Stack Sleeve Fittings: Manufactured, cast-iron sleeve with integral clamping flange. Include clamping ring and bolts and nuts for membrane flashing.

1. Underdeck Clamp: Clamping ring with set-screws.

2.16 SLEEVE SEALS

A. Manufacturers: Subject to compliance with requirements, provide products by one of the following:

1. Advance Products & Systems, Inc.

2. Calpico, Inc.

3. Metraflex, Inc.

4. Pipeline Seal and Insulator, Inc.

B. Description: Modular sealing element unit, designed for field assembly, to fill annular space between pipe and sleeve.

1. Sealing Elements: EPDM-rubber interlocking links shaped to fit surface of pipe. Include type and number required for pipe material and size of pipe.

2. Pressure Plates: Carbon steel.

3. Connecting Bolts and Nuts: Carbon steel with corrosion-resistant coating of length required to secure pressure plates to sealing elements.

2.17 GROUT

A. Standard: ASTM C 1107, Grade B, posthardening and volume adjusting, dry, hydraulic-cement grout.

B. Characteristics: Nonshrink, and recommended for interior and exterior applications.

C. Design Mix: 5000-psi, 28-day compressive strength.

D. Packaging: Premixed and factory packaged.

PART 3 - EXECUTION

3.01 PREPARATION

A. Perform fire-hydrant flow test according to NFPA 13 and NFPA 291. Use results for system design calculations required in "Quality Assurance" Article.

B. Report test results promptly and in writing.

3.02 SERVICE-ENTRANCE PIPING

A. Connect sprinkler piping to water-service piping for service entrance to building. Comply with requirements for exterior piping in Division 21 Section "Facility Fire-Suppression Water-Service Piping."

B. Install shutoff valve, as noted on drawings pressure gage, drain, and other accessories indicated at connection to water-service piping. Install shutoff valve, check valve, pressure gage, and drain at connection to water service.

3.03 WATER-SUPPLY CONNECTIONS

A. Connect sprinkler piping to building's interior water-distribution piping. Comply with requirements for interior piping in Division 22 Section "Domestic Water Piping."

B. Install shutoff valve, backflow preventer pressure gage, drain, and other accessories indicated at connection to water-distribution piping.

C. Install shutoff valve, check valve, pressure gage, and drain at connection to water supply.

3.04 PIPING INSTALLATION

A. Locations and Arrangements: Drawing plans, schematics, and diagrams indicate general location and arrangement of piping. Install piping as indicated, as far as practical.

1. Deviations from approved working plans for piping require written approval from authorities having jurisdiction. File written approval with Architect before deviating from approved working plans.

B. Piping Standard: Comply with requirements for installation of sprinkler piping in NFPA 13.

C. Install seismic restraints on piping. Comply with requirements for seismic-restraint device materials and installation in NFPA 13.

D. Use listed fittings to make changes in direction, branch takeoffs from mains, and reductions in pipe sizes.

E. Install unions adjacent to each valve in pipes NPS 2 and smaller.

F. Install flanges, flange adapters, or couplings for grooved-end piping on valves, apparatus, and equipment having NPS 2-1/2 and larger end connections.

G. Install "Inspector's Test Connections" in sprinkler system piping, complete with shutoff valve, and sized and located according to NFPA 13.

H. Install sprinkler piping with drains for complete system drainage.

I. Install sprinkler control valves, test assemblies, and drain risers adjacent to standpipes when sprinkler piping is connected to standpipes.

J. Install automatic ball drip drain valve at each check valve for fire-department connection, to drain piping between fire-department connection and check valve. Install drain piping to and spill over floor drain or to outside building.

K. Install alarm devices in piping systems.

L. Install hangers and supports for sprinkler system piping according to NFPA 13. Comply with requirements for hanger materials in NFPA 13.

M. Install pressure gages on riser or feed main, at each sprinkler test connection, and at top of each standpipe. Include pressure gages with connection not less than NPS 1/4 (DN 8) and with soft metal seated globe valve, arranged for draining pipe between gage and valve. Install gages to permit removal, and install where they will not be subject to freezing.

N. Pressurize and check preaction sprinkler system piping and air-pressure maintenance devices.

O. Fill sprinkler system piping with water.

P. Install electric heating cables and pipe insulation on sprinkler piping in areas subject to freezing. Comply with requirements for heating cables in Division 21 "Heat Tracing for Fire-Suppression Piping" and for piping insulation in Division 21 Section "Fire-Suppression Systems Insulation."

3.05 JOINT CONSTRUCTION

A. Install couplings, flanges, flanged fittings, unions, nipples, and transition and special fittings that have finish and pressure ratings same as or higher than system's pressure rating for aboveground applications unless otherwise indicated.

B. Install unions adjacent to each valve in pipes NPS 2 and smaller.

C. Install flanges, flange adapters, or couplings for grooved-end piping on valves, apparatus, and equipment having NPS 2-1/2 and larger end connections.

D. Ream ends of pipes and tubes and remove burrs. Bevel plain ends of steel pipe.

E. Remove scale, slag, dirt, and debris from inside and outside of pipes, tubes, and fittings before assembly.

F. Flanged Joints: Select appropriate gasket material in size, type, and thickness suitable for water service. Join flanges with gasket and bolts according to ASME B31.9.

G. Threaded Joints: Thread pipe with tapered pipe threads according to ASME B1.20.1. Cut threads full and clean using sharp dies. Ream threaded pipe ends to remove burrs and restore full ID. Join pipe fittings and valves as follows:

1. Apply appropriate tape or thread compound to external pipe threads.

2. Damaged Threads: Do not use pipe or pipe fittings with threads that are corroded or damaged.

H. Twist-Locked Joints: Insert plain end of steel pipe into plain-end-pipe fitting. Rotate retainer lugs one-quarter turn or tighten retainer pin.

I. Steel-Piping, Pressure-Sealed Joints: Join lightwall steel pipe and steel pressure-seal fittings with tools recommended by fitting manufacturer.

J. Welded Joints: Construct joints according to AWS D10.12m/D10.12, using qualified processes and welding operators according to "Quality Assurance" Article.

1. Shop weld pipe joints where welded piping is indicated. Do not use welded joints for galvanized-steel pipe.

K. Steel-Piping, Cut-Grooved Joints: Cut square-edge groove in end of pipe according to AWWA C606. Assemble coupling with housing, gasket, lubricant, and bolts. Join steel pipe and grooved-end fittings according to AWWA C606 for steel-pipe joints.

L. Steel-Piping, Roll-Grooved Joints: Roll rounded-edge groove in end of pipe according to AWWA C606. Assemble coupling with housing, gasket, lubricant, and bolts. Join steel pipe and grooved-end fittings according to AWWA C606 for steel-pipe grooved joints.

M. Steel-Piping, Pressure-Sealed Joints: Join Schedule 5 steel pipe and steel pressure-seal fittings with tools recommended by fitting manufacturer.

N. Brazed Joints: Join copper tube and fittings according to CDA's "Copper Tube Handbook," "Brazed Joints" Chapter.

O. Extruded-Tee Connections: Form tee in copper tube according to ASTM F 2014. Use tool designed for copper tubE; drill pilot hole, form collar for outlet, dimple tube to form seating stop, and braze branch tube into collar.

P. Dissimilar-Material Piping Joints: Make joints using adapters compatible with materials of both piping systems.

3.06 INSTALLATION OF COVER SYSTEM FOR SPRINKLER PIPING

A. Install cover system, brackets, and cover components for sprinkler piping according to manufacturer's "Installation Manual" and with NFPA 13 or NFPA 13R for supports.

3.07 VALVE AND SPECIALTIES INSTALLATION

A. Install listed fire-protection valves, trim and drain valves, specialty valves and trim, controls, and specialties according to NFPA 13 and authorities having jurisdiction.

B. Install listed fire-protection shutoff valves supervised open, located to control sources of water supply except from fire-department connections. Install permanent identification signs indicating portion of system controlled by each valve.

C. Install check valve in each water-supply connection. Install backflow preventers instead of check valves in potable-water-supply sources.

D. Specialty Valves:

1. General Requirements: Install in vertical position for proper direction of flow, in main supply to system.

2. Alarm Valves: Include bypass check valve and retarding chamber drain-line connection.

3.08 SPRINKLER INSTALLATION

A. Install sprinklers in suspended ceilings in center of narrow dimension of acoustical ceiling panels.

B. Install dry-type sprinklers with water supply from heated space. Do not install pendent or sidewall, wet-type sprinklers in areas subject to freezing.

C. Install sprinklers into flexible, sprinkler hose fittings and install hose into bracket on ceiling grid.

3.09 ESCUTCHEON INSTALLATION

A. Install escutcheons for penetrations of walls, ceilings, and floors.

B. Escutcheons for New Piping:

1. Piping with Fitting or Sleeve Protruding from Wall: One piece, deep pattern.

2. Bare Piping at Wall and Floor Penetrations in Finished Spaces: One piece, cast brass with polished chrome-plated finish.

3. Bare Piping at Ceiling Penetrations in Finished Spaces: One piece, cast brass with polished chrome-plated finish.

4. Bare Piping in Unfinished Service Spaces: One piece, cast brass with polished chrome-plated finish.

5. Bare Piping in Equipment Rooms: One piece, cast brass.

6. Bare Piping at Floor Penetrations in Equipment Rooms: One-piece floor plate.

C. Escutcheons for Existing Piping:

1. Chrome-Plated Piping: Split casting, cast brass with chrome-plated finish.

2. Insulated Piping: Split plate, stamped steel with concealed hinge and spring clips.

3. Bare Piping at Wall and Floor Penetrations in Finished Spaces: Split casting, cast brass with chrome-plated finish.

4. Bare Piping at Ceiling Penetrations in Finished Spaces: Split casting, cast brass with chrome-plated finish.

5. Bare Piping in Unfinished Service Spaces: Split casting, cast brass with polished chrome-plated finish.

6. Bare Piping in Equipment Rooms: Split casting, cast brass.

7. Bare Piping at Floor Penetrations in Equipment Rooms: Split-casting floor plate.

3.10 SLEEVE INSTALLATION

A. General Requirements: Install sleeves for pipes and tubes passing through penetrations in floors, partitions, roofs, and walls.

B. Sleeves are not required for core-drilled holes.

C. Permanent sleeves are not required for holes formed by removable PE sleeves.

D. Cut sleeves to length for mounting flush with both surfaces unless otherwise indicated.

E. Install sleeves in new partitions, slabs, and walls as they are built.

F. For interior wall penetrations, seal annular space between sleeve and pipe or pipe insulation using joint sealants appropriate for size, depth, and location of joint. Comply with requirements for joint sealants in Division 07 Section "Joint Sealants."

G. For exterior wall penetrations above grade, seal annular space between sleeve and pipe using joint sealants appropriate for size, depth, and location of joint. Comply with requirements for joint sealants in Division 07 Section "Joint Sealants."

H. For exterior wall penetrations below grade, seal annular space between sleeve and pipe using sleeve seals.

I. Seal space outside of sleeves in concrete slabs and walls with grout.

J. Install sleeves that are large enough to provide 1/4-inch annular clear space between sleeve and pipe or pipe insulation unless otherwise indicated.

K. Install sleeve materials according to the following applications:

1. Sleeves for Piping Passing through Concrete Floor Slabs: Molded PE.

2. Sleeves for Piping Passing through Concrete Floor Slabs of Mechanical Equipment Areas or Other Wet Areas: Galvanized-steel pipe.

a. Extend sleeves 2 inches above finished floor level.
b. For pipes penetrating floors with membrane waterproofing, extend cast-iron sleeve fittings below floor slab as required to secure clamping ring if ring is specified. Secure flashing between clamping flanges. Install section of cast-iron soil pipe to extend sleeve to 2 inches above finished floor level. Comply with requirements for flashing in Division 07 Section "Sheet Metal Flashing and Trim."

3. Sleeves for Piping Passing through Gypsum-Board Partitions:

a. PVC-pipe sleeves for pipes smaller than NPS 6.
b. Galvanized-steel-sheet sleeves for pipes NPS 6 and larger.
c. Exception: Sleeves are not required for water-supply tubes and waste pipes for individual plumbing fixtures if escutcheons will cover openings.

4. Sleeves for Piping Passing through Concrete Roof Slabs: Molded PE.

5. Sleeves for Piping Passing through Exterior Concrete Walls:

a. Galvanized-steel-pipe sleeves for pipes smaller than NPS 6.
b. Cast-iron wall-pipe sleeves for pipes NPS 6 and larger.
c. Install sleeves that are large enough to provide 1-inch annular clear space between sleeve and pipe or pipe insulation when sleeve seals are used.

6. Sleeves for Piping Passing through Interior Concrete Walls:

a. PVC-pipe sleeves for pipes smaller than NPS 6.
b. Galvanized-steel-sheet sleeves for pipes NPS 6 and larger.

L. Fire-Barrier Penetrations: Maintain indicated fire rating of walls, partitions, ceilings, and floors at pipe penetrations. Seal pipe penetrations with firestop materials. Comply with requirements for firestop materials and installations in Division 07 Section "Penetration Firestopping."

3.11 SLEEVE SEAL INSTALLATION

A. Install sleeve seals in sleeves in exterior concrete walls at water-service piping entries into building.

B. Select type and number of sealing elements required for pipe material and size. Position pipe in center of sleeve. Assemble sleeve seal components and install in annular space between pipe and sleeve. Tighten bolts against pressure plates that cause sealing elements to expand and make watertight seal.

3.12 IDENTIFICATION

A. Install labeling and pipe markers on equipment and piping according to requirements in NFPA 13.

B. Identify system components, wiring, cabling, and terminals. Comply with requirements for identification specified in Division 26 Section " Electrical Identification."

3.13 FIELD QUALITY CONTROL

A. Perform tests and inspections.

B. Tests and Inspections:

1. Leak Test: After installation, charge systems and test for leaks. Repair leaks and retest until no leaks exist.

2. Test and adjust controls and safeties. Replace damaged and malfunctioning controls and equipment.

3. Flush, test, and inspect sprinkler systems according to NFPA 13, "Systems Acceptance" Chapter.

4. Energize circuits to electrical equipment and devices.

5. Start and run excess-pressure pumps.

6. Coordinate with fire-alarm tests. Operate as required.

7. Coordinate with fire-pump tests. Operate as required.

8. Verify that equipment hose threads are same as local fire-department equipment.

C. Sprinkler piping system will be considered defective if it does not pass tests and inspections.

D. Prepare test and inspection reports.

3.14 CLEANING

A. Clean dirt and debris from sprinklers.

B. Remove and replace sprinklers with paint other than factory finish.

3.15 DEMONSTRATION

A. Engage a factory-authorized service representative to train Owner's maintenance personnel to adjust, operate, and maintain specialty valves.

3.16 PIPING SCHEDULE

A. Sprinkler specialty fittings may be used, downstream of control vales, instead of specified fittings.

B. Standard-pressure, wet-pipe sprinkler system, NPS 2 and smaller shall be the following:

1. Standard-weight Schedule 30, black-steel pipe with threaded ends; uncoated, gray-iron threaded fittings; and threaded joints.

2. Standard-weight Schedule 30, galvanized-steel pipe with threaded ends; galvanized, gray-iron threaded fittings; and threaded joints.

3. Standard-weight Schedule 30, black-steel pipe with plain ends; uncoated, plain-end-pipe fittings; and twist-locked joints.

4. Standard-weight Schedule 30 galvanized-steel pipe with plain ends; galvanized, plain-end-pipe fittings; and twist-locked joints.

5. Standard-weight Schedule 30, black-steel pipe with cut or roll grooved ends; uncoated, grooved-end fittings for steel piping; grooved-end-pipe couplings for steel piping; and grooved joints.

6. Standard-weight Schedule 30, galvanized-steel pipe with cut-grooved ends; galvanized, grooved-end fittings for steel piping; grooved-end-pipe couplings for steel piping; and grooved joints.

7. Standard-weight Schedule 30, black-steel pipe with plain ends; steel welding fittings; and welded joints.

8. Thinwall Schedule 10 black-steel pipe with roll-grooved ends; uncoated, grooved-end fittings for steel piping; grooved-end-pipe couplings for steel piping; and grooved joints.

9. Thinwall Schedule 10 black-steel pipe with plain ends; ncoated, plain-end-pipe fittings; and twist-locked joints.

10. Thinwall Schedule 10 black-steel pipe with plain ends; welding fittings; and welded joints.

11. Schedule 5 steel pipe; steel pressure-seal fittings; and pressure-sealed joints.

12. Type L Type B, hard copper tube with plain ends; cast-copper solder-joint fittings; and brazed joints.

13. Type L hard copper tube with plain ends; copper pressure-seal fittings; and pressure-sealed joints.

14. NPS 2, Type L Type M, hard copper tube with roll-grooved ends; copper, grooved-end fittings; grooved-end-tube couplings; and grooved joints.

C. Standard-pressure, wet-pipe sprinkler system, NPS 2-1/2 to NPS 4 the following:

1. Standard-weight, black-steel pipe with threaded ends; uncoated, gray-iron threaded fittings; and threaded joints.

2. Standard-weight, galvanized-steel pipe with threaded ends; galvanized, gray-iron threaded fittings; and threaded joints.

3. Standard-weight, black-steel pipe with cut-grooved ends; uncoated, grooved-end fittings for steel piping; grooved-end-pipe couplings for steel piping; and grooved joints.

4. Standard-weight galvanized-steel pipe with cut-grooved ends; galvanized, grooved-end fittings for steel piping; grooved-end-pipe couplings for steel piping; and grooved joints.

5. Standard-weight, black-steel pipe with plain ends; steel welding fittings; and welded joints.

6. Thinwall Schedule 10 black-steel pipe with roll-grooved ends; uncoated, grooved-end fittings for steel piping; grooved-end-pipe couplings for steel piping; and grooved joints.

7. Thinwall Schedule 10 black-steel pipe with plain ends; welding fittings; and welded joints.

8. Type L Type B, hard copper tube with plain ends; cast-copper solder-joint fittings; and brazed joints.

9. Type L Type B hard copper tube with plain ends; copper pressure-seal fittings; and pressure-sealed joints.

10. Type L, hard copper tube with roll-grooved ends; copper, grooved-end fittings; grooved-end-tube couplings; and grooved joints.

D. Standard-pressure, wet-pipe sprinkler system, NPS 5 and larger, shall be one of the following:

1. Standard-weight, black-steel pipe with threaded ends; uncoated, gray-iron threaded fittings; and threaded joints.

2. Standard-weight, galvanized-steel pipe with threaded ends; galvanized, gray-ron threaded fittings; and threaded joints.

3. Standard-weight, black-steel pipe with roll-grooved ends; uncoated, grooved-end fittings for steel piping; grooved-end-pipe couplings for steel piping; and grooved joints.

4. Standard-weight, galvanized-steel pipe with cut-grooved ends; galvanized, grooved-end fittings for steel piping; grooved-end-pipe couplings for steel piping; and grooved joints.

5. Standard-weight, black-steel pipe with plain ends; steel welding fittings; and welded joints.

6. Thinwall black-steel pipe with roll-grooved ends; uncoated, grooved-end fittings for steel piping; grooved-end-pipe couplings for steel piping; and grooved joints.

7. Thinwall black-steel pipe with plain ends; welding fittings; and welded joints.

8. Type L hard copper tube with plain ends; cast-copper solder-joint fittings; and brazed joints.

9. Type L, hard copper tube with roll-grooved ends; copper, grooved-end fittings; grooved-end-tube couplings; and grooved joints.

E. High-pressure, wet-pipe sprinkler system, NPS 4 and smaller the following:

1. Standard-weight, galvanized-steel pipe with threaded ends; galvanized, gray-iron threaded fittings; and threaded joints.

2. Standard-weight, galvanized-steel pipe with cut-grooved ends; galvanized, grooved-end fittings for steel piping; grooved-end-pipe couplings for steel piping; and grooved joints.

3. Standard-weight, black-steel pipe with plain ends; steel welding fittings; and welded joints.

4. Thinwall black-steel pipe with plain ends; welding fittings; and welded joints.

F. High-pressure, wet-pipe sprinkler system, NPS 5 and larger one of the following:

1. Standard-weight, galvanized-steel pipe with threaded ends; galvanized, gray-iron threaded fittings; and threaded joints.

2. Standard-weight, galvanized-steel pipe with cut-grooved ends; galvanized, grooved-end fittings for steel piping; grooved-end-pipe couplings for steel piping; and grooved joints.

3. Standard-weight, black-steel pipe with plain ends; steel welding fittings; and welded joints.

4. Thinwall black-steel pipe with plain ends; welding fittings; and welded joints.

3.17 SPRINKLER SCHEDULE

A. Use sprinkler types in subparagraphs below for the following applications:

1. Rooms without Ceilings: Upright sprinklers.

2. Rooms with Suspended Ceilings: Pendent sprinklers Recessed sprinklers Flush sprinklers Concealed sprinklers Pendent, recessed, flush, and concealed sprinklers as indicated.

3. Wall Mounting: Sidewall sprinklers.

4. Spaces Subject to Freezing: Upright sprinklers

B. Provide sprinkler types in subparagraphs below with finishes indicated.

1. Concealed Sprinklers: Rough brass, with factory-painted white cover plate.

2. Flush Sprinklers: Bright chrome, with painted white escutcheon.

3. Recessed Sprinklers: Bright chrome, with bright chrome escutcheon.

4. Residential Sprinklers: Dull chrome.

5. Upright and Sidewall Sprinklers: Chrome plated in finished spaces exposed to view; rough bronze in unfinished spaces not exposed to view; wax coated where exposed to acids, chemicals, or other corrosive fumes.

END OF SECTION

21 13 13

THIS PAGE IS BLANK

SECTION 22 05 00

COMMON WORK RESULTS FOR PLUMBING

PART 1 - GENERAL

1.01 SUMMARY

A. This section supplements all Sections of this Division and shall apply to all phases of Work required to provide for complete installation of plumbing systems. Intent of this specification is to provide complete and fully functional plumbing systems.

1.02 RELATED SECTIONS

A. Section 01330 – Submittal Procedures.

B. Section 01400 – Quality Requirements.

C. Section 01524 - Construction Waste Management.

D. Section 01770 – Closeout Submittals.

1.03 SUBMITTALS

A. Submittals: in accordance with Section 01330 - Submittal Procedures.

B. Shop drawings; submit drawings stamped and signed for approval by Owner's Representative.

C. Shop drawings to show:
1. Mounting arrangements.
2. Operating and maintenance clearances.
3. Fire-rated wall and floor penetration.
4. Sizes and location of required concrete pads and bases.
5. Valve stem movement.
6. Sizes and locations of new and existing equipment support curbs on roof.
7. Sizes and locations of new openings, either sleeved, cut, or core-drilled, in new concrete construction unless specifically shown on the Structural Drawings.

D. Shop drawings and product data accompanied by:
1. Detailed drawings of bases, supports, and anchor bolts.
2. Points of operation on performance curves.
3. Manufacturer to certify current model production.

4. Certification of compliance to applicable codes.

E. In addition to transmittal letter referred to in Section 01330 - Submittal Procedures: use MCAC "Shop Drawing Submittal Title Sheet". Identify section and paragraph number.

F. Closeout Submittals:

1. Provide operation and maintenance data for incorporation into manual specified in Section 01770 - Closeout Submittals.
2. Operation and maintenance manual approved by, and final copies deposited with, Owner’s Representative before final inspection.
3. Operation data to include:
   a. Description of systems and their controls.
   b. Operation instruction for systems and component.
   c. Description of actions to be taken in event of equipment failure.
   d. Valves schedule and flow diagram.
   e. Colour coding chart.
4. Maintenance data to include:
   a. Servicing, maintenance, operation and trouble-shooting instructions for each item of equipment.
   b. Data to include schedules of tasks, frequency, tools required and task time.
5. Performance data to include:
   a. Equipment manufacturer's performance datasheets with point of operation as left after commissioning is complete.
   b. Equipment performance verification test results.
   c. Special performance data as specified.
   d. Testing, adjusting and balancing reports.
6. Approvals:
   a. Submit 2 copies of draft Operation and Maintenance Manual to Owner’s Representative for approval. Submission of individual data will not be accepted unless directed by Owner’s Representative.
   b. Make changes as required and re-submit as directed by Owner’s Representative.
7. Additional data:
   a. Prepare and insert into operation and maintenance manual additional data when need for it becomes apparent during specified demonstrations and instructions.
8. Site records:

a. Owner's Representative will provide 1 set of reproducible mechanical drawings or AutoCAD files. Provide sets of white prints as required for each phase of work. Mark changes as work progresses and as changes occur. Include changes to existing mechanical systems, control systems and low voltage control wiring.

b. Transfer information weekly to reproducibles, revising reproducibles to show work as actually installed.

c. Use different colour for each service.

d. Make available for reference purposes and inspection.

9. As-built drawings:

a. Identify each drawing in lower right hand corner in letters at least 12 mm high as follows: - "AS BUILT DRAWINGS: THIS DRAWING HAS BEEN REVISED TO SHOW PLUMBING SYSTEMS AS INSTALLED" (Signature of Contractor) (Date).

b. Submit to Owner's Representative for approval and make corrections as directed.

c. Perform commissioning using as-built drawings.

d. Submit completed reproducible as-built drawings with Operating and Maintenance Manuals.

10. Submit copies of as-built drawings for inclusion in final report.

1.04 QUALITY ASSURANCE

A. Quality Assurance: in accordance with Section 01400 - Quality Requirements.

1.05 MAINTENANCE

A. Furnish spare parts in accordance with Section 01770 - Closeout Submittals as follows:

1. One set of packing for each pump.

2. One casing joint gasket for each size pump.

B. Provide one set of special tools required to service equipment as recommended by manufacturers and in accordance with Section 01770 - Closeout Submittals.

C. Furnish one commercial quality grease gun, grease and adapters to suit different types of grease and grease fittings.

1.06 DELIVERY, STORAGE, AND HANDLING

A. Waste Management and Disposal:

1. Construction/Demolition Waste Management and Disposal: separate waste materials for reuse and recycling in accordance with Section 01524 – Construction Waste Management.

PART 2 - PRODUCTS

2.01 MATERIALS

A. All materials used on this project shall be new and CSA approved unless noted otherwise.

PART 3 - EXECUTION

3.01 PAINTING, REPAIRS AND RESTORATION

A. Prime and touch up marred finished paintwork to match original.

B. Restore to new condition, finishes which have been damaged.

3.02 CLEANING

A. Clean interior and exterior of all systems including strainers.

3.03 FIELD QUALITY CONTROL

A. Site Tests: conduct following tests in accordance with Section 01400 - Quality Requirements and submit report as described in PART 1 - SUBMITTALS.
   1. Perform tests as specified in other sections of this specification.

B. Manufacturer's Field Services:
   1. Obtain written report from manufacturer verifying compliance of Work, in handling, installing, applying, protecting and cleaning of product and submit Manufacturer's Field Reports as described in PART 1 - SUBMITTALS.
   2. Provide manufacturer's field services consisting of product use recommendations and periodic site visits for inspection of product installation in accordance with manufacturer's instructions.
   3. Schedule site visits, to review Work, as directed in PART 1 - QUALITY ASSURANCE.

3.04 DEMONSTRATION

A. Owner’s Representative will use equipment and systems for test purposes prior to acceptance. Contractor to supply labor, material, and instruments required for testing.

B. Supply tools, equipment and personnel to demonstrate and instruct operating and maintenance personnel in operating, controlling, adjusting, trouble-shooting and servicing of all systems and equipment during regular work hours, prior to acceptance.

C. Use operation and maintenance manual, as-built drawings, and audio visual aids as part of instruction materials.

D. Instruction duration time requirements as specified in appropriate sections.

E. Owner's Representative may record these demonstrations on video tape for future reference.

3.05 PROTECTION

A. Protect equipment and systems openings from dirt, dust, and other foreign materials with materials appropriate to system

END OF SECTION

22 05 00

THIS PAGE IS BLANK

SECTION 22 05 17

SLEEVES AND SLEEVE SEALS FOR PLUMBING PIPING

Part 1 - GENERAL

1.01 RELATED DOCUMENTS

A. Drawings and general provisions of the Contract, including General and Supplementary Conditions and Division 01 Specification Sections, apply to this Section.

1.02 SUMMARY

A. Section Includes:

1. Sleeves.
2. Stack-sleeve fittings.
3. Sleeve-seal systems.
4. Sleeve-seal fittings.
5. Grout.

1.03 ACTION SUBMITTALS

A. Product Data: For each type of product indicated.

Part 2 - PRODUCTS

2.01 SLEEVES

A. Cast-Iron Wall Pipes: Cast or fabricated of cast or ductile iron and equivalent to ductile-iron pressure pipe, with plain ends and integral waterstop unless otherwise indicated.

B. Galvanized-Steel Wall Pipes: ASTM A 53/A 53M, Schedule 40, with plain ends and welded steel collar; zinc coated.

C. Galvanized-Steel-Pipe Sleeves: ASTM A 53/A 53M, Type E, Grade B, Schedule 40, zinc coated, with plain ends.

D. PVC-Pipe Sleeves: ASTM D 1785, Schedule 40.

E. Galvanized-Steel-Sheet Sleeves: 0.0239-inch (0.6-mm) minimum thickness; round tube closed with welded longitudinal joint.

F. Molded-PE or -PP Sleeves: Removable, tapered-cup shaped, and smooth outer surface with nailing flange for attaching to wooden forms.

G. Molded-PVC Sleeves: With nailing flange for attaching to wooden forms.

2.02 STACK-SLEEVE FITTINGS

A. Manufacturers: Subject to compliance with requirements, available manufacturers offering products that may be incorporated into the Work include, but are not limited to, the following:

1. Smith, Jay R. Mfg. Co.
2. Zurn Specification Drainage Operation
3. Zurn Plumbing Products Group.

B. Description: Manufactured, cast-iron sleeve with integral clamping flange. Include clamping ring, bolts, and nuts for membrane flashing.

1. Underdeck Clamp: Clamping ring with setscrews.

2.03 SLEEVE-SEAL SYSTEMS

A. Manufacturers: Subject to compliance with requirements, available manufacturers offering products that may be incorporated into the Work include, but are not limited to, the following:

1. Advance Products & Systems, Inc.
2. CALPICO, Inc.
3. Metraflex Company (The).
4. Pipeline Seal and Insulator, Inc.
5. Proco Products, Inc.

B. Description: Modular sealing-element unit, designed for field assembly, for filling annular space between piping and sleeve.

1. Sealing Elements: EPDM-rubber or NBR interlocking links shaped to fit surface of pipe. Include type and number required for pipe material and size of pipe
2. Pressure Plates: Carbon steel, Plastic, or Stainless steel.
3. Connecting Bolts and Nuts: Carbon steel, with corrosion-resistant coating, or Stainless steel of length required to secure pressure plates to sealing elements.

2.04 SLEEVE-SEAL FITTINGS

A. Manufacturers: Subject to compliance with requirements, [provide products by one of the following] [available manufacturers offering products that may be incorporated into the Work include, but are not limited to, the following]:

1. Presealed Systems.

B. Description: Manufactured plastic, sleeve-type, waterstop assembly made for imbedding in concrete slab or wall. Unit has plastic or rubber waterstop collar with center opening to match piping OD.

2.05 GROUT

A. Standard: ASTM C 1107/C 1107M, Grade B, post-hardening and volume-adjusting, dry, hydraulic-cement grout.

B. Characteristics: Nonshrink; recommended for interior and exterior applications.

C. Design Mix: 5000-psi (34.5-MPa), 28-day compressive strength.

D. Packaging: Premixed and factory packaged.

Part 3 - EXECUTION

3.01 SLEEVE INSTALLATION

A. Install sleeves for piping passing through penetrations in floors, partitions, roofs, and walls.

B. For sleeves that will have sleeve-seal system installed, select sleeves of size large enough to provide 1-inch (25-mm) annular clear space between piping and concrete slabs and walls.

1. Sleeves are not required for core-drilled holes.

C. Install sleeves in concrete floors, concrete roof slabs, and concrete walls as new slabs and walls are constructed.

1. Permanent sleeves are not required for holes in slabs formed by molded-PE or -PP sleeves.

2. Cut sleeves to length for mounting flush with both surfaces.

a. Exception: Extend sleeves installed in floors of mechanical equipment areas or other wet areas 2 inches (50 mm) above finished floor level.

3. Using grout, seal the space outside of sleeves in slabs and walls without sleeve-seal system.

D. Install sleeves for pipes passing through interior partitions.

1. Cut sleeves to length for mounting flush with both surfaces.

2. Install sleeves that are large enough to provide 1/4-inch (6.4-mm) annular clear space between sleeve and pipe or pipe insulation.

3. Seal annular space between sleeve and piping or piping insulation; use joint sealants appropriate for size, depth, and location of joint. Comply with manufacturer requirements for sealants.

3.02 STACK-SLEEVE-FITTING INSTALLATION

A. Install stack-sleeve fittings in new slabs as slabs are constructed.

1. Install fittings that are large enough to provide 1/4-inch (6.4-mm) annular clear space between sleeve and pipe or pipe insulation.

2. Secure flashing between clamping flanges for pipes penetrating floors with membrane waterproofing. Comply with requirements for flashing specified in Section 076200 "Sheet Metal Flashing and Trim."

3. Install section of cast-iron soil pipe to extend sleeve to 2 inches (50 mm) above finished floor level.

4. Extend cast-iron sleeve fittings below floor slab as required to secure clamping ring if ring is specified.

5. Using grout, seal the space around outside of stack-sleeve fittings.

3.03 SLEEVE-SEAL-SYSTEM INSTALLATION

A. Install sleeve-seal systems in sleeves in exterior concrete walls and slabs-on-grade at service piping entries into building.

B. Select type, size, and number of sealing elements required for piping material and size and for sleeve ID or hole size. Position piping in center of sleeve. Center piping in penetration, assemble sleeve-seal system components, and install in annular space between piping and sleeve. Tighten bolts against pressure plates that cause sealing elements to expand and make a watertight seal.

3.04 SLEEVE-SEAL-FITTING INSTALLATION

A. Install sleeve-seal fittings in new walls and slabs as they are constructed.

B. Assemble fitting components of length to be flush with both surfaces of concrete slabs and walls. Position waterstop flange to be centered in concrete slab or wall.

C. Secure nailing flanges to concrete forms.

D. Using grout, seal the space around outside of sleeve-seal fittings.

3.05 SLEEVE AND SLEEVE-SEAL SCHEDULE

A. Use sleeves and sleeve seals for the following piping-penetration applications:

1. Exterior Concrete Walls above Grade:

a. Piping Smaller Than NPS 6 (DN 150): Galvanized-steel-pipe sleeves.

b. Piping NPS 6 (DN 150) and Larger: Galvanized-steel wall sleeves.

2. Exterior Concrete Walls below Grade:

a. Piping Smaller Than NPS 6 (DN 150): Galvanized-steel-pipe sleeves with sleeve-seal system <Insert material>.

1) Select sleeve size to allow for 1-inch (25-mm) annular clear space between piping and sleeve for installing sleeve-seal system.

b. Piping NPS 6 (DN 150) and Larger: Galvanized-steel wall sleeves with sleeve-seal system.

1) Select sleeve size to allow for 1-inch (25-mm) annular clear space between piping and sleeve for installing sleeve-seal system.

3. Concrete Slabs-on-Grade:

a. Piping Smaller Than NPS 6 (DN 150): Galvanized-steel-pipe sleeves with sleeve-seal system.

1) Select sleeve size to allow for 1-inch (25-mm) annular clear space between piping and sleeve for installing sleeve-seal system.

b. Piping NPS 6 (DN 150) and Larger: Galvanized-steel-pipe sleeves with sleeve-seal system.

1) Select sleeve size to allow for 1-inch (25-mm) annular clear space between piping and sleeve for installing sleeve-seal system.

4. Concrete Slabs above Grade:

a. Piping Smaller Than NPS 6 (DN 150): Galvanized-steel-pipe sleeves.

b. Piping NPS 6 (DN 150) and Larger: Galvanized-steel-pipe sleeves.

5. Interior Partitions:

a. Piping Smaller Than NPS 6 (DN 150): Galvanized-steel-pipe sleeves.

b. Piping NPS 6 (DN 150) and Larger: Galvanized-steel-sheet sleeves.

END OF SECTION

22 05 17

THIS PAGE IS BLANK

SECTION 22 05 18

ESCUTCHEONS FOR PLUMBING PIPING

PART 1 - GENERAL

1.01 RELATED DOCUMENTS

A. Drawings and general provisions of the Contract, including General and Supplementary Conditions and Division 01 Specification Sections, apply to this Section.

1.02 SUMMARY

A. Section Includes:

1. Escutcheons.
2. Floor plates.

1.03 ACTION SUBMITTALS

A. Product Data: For each type of product indicated.

PART 2 - PRODUCTS

2.01 ESCUTCHEONS

A. One-Piece, Cast-Brass Type: With polished, chrome-plated finish and setscrew fastener.

B. One-Piece, Deep-Pattern Type: Deep-drawn, box-shaped brass with chrome- plated finish and spring-clip fasteners.

C. One-Piece, Stamped-Steel Type: With chrome-plated finish and spring-clip fasteners.

D. Split-Casting Brass Type: With polished, chrome-plated finish and with concealed hinge and setscrew.

E. Split-Plate, Stamped-Steel Type: With chrome-plated finish, concealed hinge, and spring-clip fasteners.

2.02 FLOOR PLATES

A. One-Piece Floor Plates: Cast-iron flange with holes for fasteners.

B. Split-Casting Floor Plates: Cast brass with concealed hinge

PART 3 - EXECUTION

3.01 INSTALLATION

A. Install escutcheons for piping penetrations of walls, ceilings, and finished floors.

B. Install escutcheons with ID to closely fit around pipe, tube, and insulation of insulated piping and with OD that completely covers opening.

1. Escutcheons for New Piping:

a. Piping with Fitting or Sleeve Protruding from Wall: One-piece, deep-pattern type.

b. Chrome-Plated Piping: One-piece, cast-brass type with polished, chrome- plated finish.

c. Insulated Piping: One-piece, stamped-steel type.

d. Bare Piping at Wall and Floor Penetrations in Finished Spaces: One-piece, cast-brass type with polished, chrome-plated finish.

e. Bare Piping at Wall and Floor Penetrations in Finished Spaces: One-piece, stamped-steel type.

f. Bare Piping at Ceiling Penetrations in Finished Spaces: One-piece, cast- brass type with polished, chrome-plated finish.

g. Bare Piping at Ceiling Penetrations in Finished Spaces: One-piece, stamped-steel type or split-plate, stamped-steel type with concealed hinge.

h. Bare Piping in Unfinished Service Spaces: One-piece, stamped-steel type or split-plate, stamped-steel type with concealed hinge.

i. Bare Piping in Equipment Rooms: One-piece, cast-brass type with polished, chrome-plated finish.

j. Bare Piping in Equipment Rooms: One-piece, stamped-steel type.

C. Install floor plates for piping penetrations of equipment-room floors.

D. Install floor plates with ID to closely fit around pipe, tube, and insulation of piping and with OD that completely covers opening.

1. New Piping: One-piece, floor-plate type.

2. Existing Piping: Split-Casting Floor Plates

3.02 FIELD QUALITY CONTROL

A. Replace broken and damaged escutcheons and floor plates using new materials

END OF SECTION

22 05 18

SECTION 22 07 19

PLUMBING PIPING INSULATION

PART 1 - GENERAL

1.01 RELATED DOCUMENTS

A. Drawings and general provisions of the Contract, including General and Supplementary Conditions and Division 01 Specification Sections, apply to this Section.

1.02 SUMMARY

A. Section includes insulating the following plumbing piping services:
1. Domestic cold-water piping.
2. Domestic hot-water piping.
3. Domestic recirculating hot-water piping.
4. Storm-water piping exposed to freezing conditions.
5. Roof drains and rainwater leaders.
6. Supplies and drains for handicap-accessible lavatories and sinks.

1.03 REFERENCES

A. General:
1. The following documents form part of the Specifications to the extent stated. Where differences exist between codes and standards, the one affording the greatest protection shall apply.
2. Unless otherwise noted, the referenced standard edition is the current one at the time of commencement of the Work.
3. Refer to Division 01 Section "Summary" for the list of applicable regulatory requirements.
4. Refer to Division 22 Section "Common Work Results for Plumbing" for codes and standards, and other general requirements.

B. ASTM International:
1. ASTM-B-209 Standard Specification for Aluminum and Aluminum-Alloy Sheet and Plate

2. ASTM-C-195 Standard Specification for Mineral Fiber Thermal Insulating Cement

3. ASTM C 196 Standard Specification for Expanded or Exfoliated Vermiculite Thermal Insulating Cement

4. ASTM-C-449 Standard Specification for Mineral Fiber Hydraulic-Setting Thermal Insulating and Finishing Cement

5. ASTM-C-533 Standard Specification for Calcium Silicate Block and Pipe Thermal Insulation

6. ASTM C534 / C534M Standard Specification for Preformed Flexible Elastomeric Cellular Thermal Insulation in Sheet and Tubular Form

7. ASTM-C-547 Standard Specification for Mineral Fiber Pipe Insulation

8. ASTM-C-552 Standard Specification for Cellular Glass Thermal Insulation

9. ASTM C553 Standard Specification for Mineral Fiber Blanket Thermal Insulation for Commercial and Industrial Applications

10. ASTM-C-578 Standard Specification for Rigid, Cellular Polystyrene Thermal Insulation

11. ASTM-C-610 Standard Specification for Molded Expanded Perlite Block and Pipe Thermal Insulation

12. ASTM-E-84 Standard Test Method for Surface Burning Characteristics of Building Material.

13. ASTM C 450 Standard Practice for Fabrication of Thermal Insulating Fitting Covers for NPS Piping, and Vessel Lagging

14. ASTM C 921 Standard Practice for Determining the Properties of Jacketing Materials for Thermal Insulation

15. ASTM B 209 Standard Specification for Aluminum and Aluminum-Alloy Sheet and Plate

16. ASTM A666 Standard Specification for Annealed or Cold-Worked Austenitic Stainless Steel Sheet, Strip, Plate, and Flat Bar

C. Code of Federal Regulations 20-CFR-1910.7 Definitions and Requirements for A Nationally Recognized Testing Laboratory (NRTL)

D. National Fire Protection Association NFPA-90A & NFPA-255 Surface Burning Characteristics of Building Materials

E. Underwriters Laboratories UL-723 Surface Burning Characteristics of Building Materials

1.04 SUBMITTALS

A. Submit under provisions of Division 01 Section "Submittal Procedures."

B. Subcontractor shall submit the product description, list of materials and thickness for each service, and at each location.

1.05 QUALITY ASSURANCE

A. Subcontractor shall assure applicator is a company specializing in piping insulation application with at least 3-years relevant experience.

B. Fire Hazard: Provide insulation, jackets, facings adhesives and accessories acceptable to the State Fire Marshal, and meeting the requirements of NFPA 90A. Meet the following hazard classifications stated in accordance with U.L. Test Method of Fire Hazard - Classifications of Building Materials, No. 723:

1. Flame-spread: Maximum 25.

2. Fuel Contributed: Maximum 50.

3. Smoke Developed: Maximum 50.

PART 2 - PRODUCTS

2.01 INSULATION MATERIALS

A. Mineral-Fiber Insulation: Glass fibers bonded with a thermosetting resin complying with the following:

1. Preformed Pipe Insulation: Comply with ASTM C 547, Type I, with factory-applied, all-purpose, vapor-retardant jacket.

2. Blanket Insulation: Comply with ASTM C553, Type II, without facing.

3. Fire-Resistant Adhesive: Comply with MIL-A-3316C in the following classes and grades:

a. Class I, Grade A for bonding glass cloth and tape to unfaced glass-fiber insulation, for sealing edges of glass-fiber insulation, and for bonding lagging cloth to unfaced glass-fiber insulation.

b. Class 2, Grade A for bonding glass-fiber insulation to metal surfaces.

c. For indoor applications, use adhesive that has a VOC content of 80 g/L or less when calculated according to 40 CFR 59, Subpart D (EPA Method 24).

4. Vapor-Retarder Mastics: Fire and water-resistant, vapor-retarder mastic for indoor applications. Comply with MIL-C 19565C, Type II. See Section 2.5 below.

5. Mineral-Fiber Insulating Cements: Comply with ASTM C 195.

6. Expanded or Exfoliated Vermiculite Insulating Cements: Comply with ASTM C 196.

7. Mineral-Fiber, Hydraulic-Setting Insulating and Finishing Cement: Comply with ASTM C 449/C 449M.

B. Cellular-Glass Insulation: Inorganic, foamed or cellulated glass, annealed, rigid, hermetically sealed cells, incombustible.
   1. Preformed Pipe Insulation, without Jacket: Comply with ASTM C 552, Type II, Class I.

   2. Preformed Pipe Insulation, with Jacket: Comply with ASTM C 552, Type II, Class 2.

   3. Cellular-Glass, Phenolic, Polyisocyanurate, and Polystyrene Adhesive: Solvent-based resin adhesive, with a service temperature range of minus 75 to plus 300 deg F. For indoor applications, use adhesive that has a VOC content of 50 g/L or less when calculated according to 40 CFR 59, Subpart D (EPA Method 24).

      a. Prefabricated Thermal Insulating Fitting Covers: Comply with ASTM C 450 for dimensions used in performing insulation to cover valves, elbows, tees, and flanges.

C. Elastomeric Foam Pipe Insulation: Pre-Formed elastomeric foam, ASTM C534 Type 1 flexible, closed cell, suitable for use up to 220ºF, UV protected, not to exceed flame spread 25 and smoke developed 50 based on 0.75 inch thickness, conductivity 0.30 at 75ºF. Armaflex, Rubatex, Armstrong.

2.02 FIELD-APPLIED JACKETS

A. General: ASTM C 921, Type I, unless otherwise indicated.

B. Foil and Paper Jacket: Not acceptable.

C. PVC Jacket: High-impact, ultraviolet-resistant PVC; 20 mils thick; roll stock ready for shop or field cutting and forming.
   1. Adhesive: As recommended by insulation material manufacturer.

   2. PVC Jacket Color: White

   3. PVC Jacket Color: Color-code piping jacket as determined by existing conditions.

   4. Not to be used for outdoors.

D. Heavy PVC Fitting Covers: Factory-fabricated fitting covers manufactured from 30-mil (0.75 mm) thick, high-impact, ultraviolet-resistant PVC.

1. Shapes: 45 and 90-degree, short and long-radius elbows, tees, valves, flanges, reducers, end caps, soil-pipe hubs, traps, mechanical joints, and P-trap and supply covers for lavatories for the disabled.

2. Adhesive: As recommended by insulation material manufacturer.

3. Not to be used for outdoors.

a. Aluminum Jacket: Aluminum roll stock, ready for shop or field cutting and forming to indicated sizes. Comply with ASTM B 209 (ASTM B 209M), 3003 alloy, H-14 temper.

1) Finish and Thickness: Smooth finish, 0.010 (0.25 mm) inch thick.

2) Moisture Barrier: 1-mil thick, heat-bonded polyethylene and kraft paper.

3) Elbows: preformed 45 and 90-degree, short and long-radius elbows; same material, finish, and thickness as jacket.

2.03 ACCESSORIES AND ATTACHMENTS

A. Bands: stainless steel ASTM A666, Type 304, 3/4 inch (20 mm) wide; 0.02 inch (0.050 mm) thick.

2.04 VAPOR RETARDANTS

A. Mastics: Use materials as recommended by the insulation material manufacturer that are compatible with insulation materials, jackets, and substrates.

B. Materials shall be compatible with insulation materials, jackets, and substrates; comply with MIL-C-19565C, Type II.

1. For indoor applications, use mastics that have a VOC content compliant with 40 CFR 59, Subpart D (EPA).

2.05 SEALANTS

A. Joint Sealants:

1. For indoor applications, use mastics that have a VOC content of 250 g/L or less when calculated according to 40 CFR 59, Subpart D (EPA Method 24).

PART 3 - EXECUTION

3.01 EXAMINATION

A. Examine substrates and conditions for compliance with requirements for installation and other conditions affecting performance of insulation application.

B. Proceed with installation only after unsatisfactory conditions have been corrected.

3.02 PREPARATION

A. Install materials after piping has been tested and approved.

B. Surface Preparation: Clean and dry surfaces to receive insulation. Remove materials that will adversely affect insulation application.

3.03 GENERAL APPLICATION REQUIREMENTS.

A. Apply insulation materials, accessories, and finishes according to the manufacturer's written instructions; with smooth, straight, and even surfaces; and free of voids throughout the length of ducts and fittings.

B. Refer to schedules at the end of this Section for material, form, jacket, and thickness required for each piping system insulation requirements.

C. Use accessories compatible with insulation materials and suitable for the service. Use accessories that do not corrode, soften or otherwise attack insulation or jacket when in either wet or dry state.

D. Apply insulation with longitudinal seams at top and bottom of horizontal pipe runs.

E. Apply multiple layers of insulation with longitudinal and end seams staggered.

F. Do not weld brackets, clips, or other attachment devices to piping, fittings, and specialties.

G. Seal joints and seams with vapor-retardant mastic on insulation indicated to receive a vapor retardant.

H. Keep insulation materials dry during application and finishing.

I. Apply insulation with tight longitudinal seams and end joints. Bond the seams and joints with adhesive recommended by the insulation material manufacturer.

J. Apply insulation with the least number of joints practical.

K. Apply insulation over fittings, valves, and specialties, with continuous thermal and vapor-retardant integrity, unless otherwise indicated. Refer to special instruction for applying insulation over fittings, valves, and specialties.

L. Hangers and Anchors: Where vapor retardant is indicated, seal penetrations in insulation at hangers, supports, anchors, and other projections with vapor-retardant mastic.

1. Apply insulation continuously through hangers and around anchor attachments.

2. For insulation application where vapor retardants are indicated, extend insulation on anchor legs at lease 12 inches (300 mm)es from point of attachment to pipe and taper insulation ends. Seal tapered ends with a compound recommended by the insulation material manufacturer to maintain vapor retardant integrity.

3. Install insert materials and apply insulation to tightly join the insert. Seal insulation to insulation inserts with adhesive or sealing compound recommended by the insulation material manufacturer.

4. Cover inserts with jacket material matching adjacent pipe insulation. Install shields over jacket, arranged to protect the jacket from tear or puncture by the hanger, support, and shield.

M. Insulation Terminations: For insulation where vapor retardants are indicated, taper insulation ends. Seal tapered ends with a compound recommended by the insulation material manufacturer to maintain vapor retardant integrity.

N. Apply adhesives and mastics at the manufacturer's recommended coverage rate.

O. Apply insulation with integral jackets as follows:

1. Pull jacket tight and smooth.

2. Circumferential Joints: Cover with 3 inches (75 mm) wide strips, of same material as insulation jacket. Secure strips with adhesive and outward clinching staples along both edges of strip and spaced 4-inches o.c.

3. Longitudinal Seams: Overlap jacket seams at least 1 1/2 inches (38 mm). Apply insulation with longitudinal seams at bottom of pipe. Clean and dry surface to receive self-sealing lap. Staple laps with outward clinching staples along edge at 4-inches o.c.

4. Exception: Do not staple longitudinal laps on insulation having a vapor retardant.

5. Vapor-retardant mastics: Where vapor retardants are indicated, apply mastic on seams and joints and at ends adjacent to flanges, unions, valves, and fittings.

6. At penetrations in jackets for thermometers and pressure gauges, fill and seal voids with vapor-retardant mastic.

P. Roof Penetrations: Apply insulation for interior applications to a point even with top of roof flashing.

1. Seal penetrations with vapor-retardant mastic.

2. Apply insulation for exterior applications tightly joined to interior insulation ends.

3. Extend metal jacket for exterior insulation occurring outside of roof flashing at least 2-inches below the top of the roof flashing.

4. Seal sheet metal jacket to roof flashing with vapor-retardant mastic.

Q. Exterior Wall Penetrations: For penetration of below-grade exterior walls, terminate insulation flush with mechanical sleeve seal. Seal terminations with vapor-retardant mastic.

R. Interior Wall and Partition Penetrations: Apply insulation continuously through walls and floors.

3.04 MINERAL-FIBER INSULATION APPLICATION

A. Apply insulation to straight pipes and tubes as follows;

1. Secure each layer of preformed pipe insulation to pipe with wire, tape, or bands without deforming insulation materials.

2. Where vapor retarders are indicated, seal longitudinal seams and end joints with vapor-retarder mastic. Apply vapor retarder to ends of insulation at intervals of 15 to 20-feet (4.5 to 6 m) to form a vapor retarder between pipe insulation segments.

3. For insulation with factory-applied jackets, secure laps with outward clinches staples at 6 inches o.c.

4. For insulation with factory-applied jackets with vapor retarders, do not staple longitudinal tabs but secure tabs with additional adhesive as recommended by the insulation material manufacturer and seal with vapor-retarder mastic.

B. Apply Insulation to flanges as follows:

1. Apply preformed pipe insulation to outer diameter of pipe flange.

2. Make width of insulation segment the same as overall width of the flange and bolts, plus twice the thickness of the pipe insulation.

3. Fill voids between inner circumference of flange insulation and outer circumference of adjacent straight pipe segments with mineral-fiber blanket insulation.

4. Apply canvas jacket material with manufacturer's recommended adhesive, overlapping seams at least 1 inch (25 mm), and seal joints with vapor-retarder mastic.

C. Apply insulation to fittings and elbows as follows:

1. Apply premolded insulation sections of the same material as straight segments of pipe insulation when available. Secure according to manufacturer's written instructions.

2. When premolded insulation elbows and fittings are not available, apply mitered sections of pipe insulation, or glass-fiber blanket insulation, to a thickness equal to adjoining pipe insulation. Secure insulation materials with wire, tape, or bands.

3. Cover fittings with heavy PVC covers. Overlap PVC covers on pipe insulation jackets at least 1 inch (25 mm) at each end. Secure fitting covers with manufacturer's attachments and accessories. Seal seams with tape and vapor-retarder mastic.

D. Apply insulation to valves and specialties as follows:

1. Apply premolded insulation sections of the same material as straight segments of pipe insulation when available. Secure according to manufacturer's written instructions.

2. When premolded insulation sections are not available, apply glass-fiber blanket insulation to valve body. Arrange insulation to permit access to packing and to allow valve operation without disturbing insulation. For check valves, arrange insulation for access to strainer basket without disturbing insulation.

3. Apply insulation to flanges as specified for flange insulation application.

4. Use preformed heavy PVC fitting covers for valve sizes where available. Secure fitting covers with manufacturer's attachments and accessories. Seal seams with tape and vapor-retarder mastic.

5. For larger sizes where PVC fitting covers are not available, seal insulation with canvas jacket and sealing compound recommended by the insulation material manufacturer.

3.05 CELLULAR-GLASS INSULATION APPLICATION

A. Apply insulation to straight pipes and tubes as follows:

1. Secure each layer of insulation to pipe with bands without deforming insulation.

2. Where vapor retarders are indicated, seal longitudinal seams and end joints with vapor-retarder mastic.

3. For insulation with factory-applied jackets, secure laps with outward clinched staples at 6-inches o.c.

4. For insulation with factory-applied jackets with vapor retarders, do not staple longitudinal tabs but secure tabs with additional adhesive as recommended by the insulation material manufacturer and seal with vapor-retarder mastic.

B. Apply insulation to flanges as follows:

1. Apply preformed pipe insulation to outer diameter of pipe flange.

2. Make width of insulation segment the same as overall width of the flange and bolts, plus twice the thickness of the pipe insulation.

3. Fill voids between inner circumference of flange insulation and outer circumference of adjacent straight pipe segments with cut sections of cellular-glass block insulation of the same thickness as pipe insulation

4. Apply insulation to fittings and elbows as follows:

5. Apply premolded insulation sections of the same material as straight segments of pipe insulation when available. Secure according to manufacturer's written instruction.

6. When premolded sections of insulation are not available, apply mitered sections of cellular-glass insulation. Secure insulation materials with bands.

7. Cover fittings with heavy PVC fitting covers. Overlap PVC covers on pipe insulation jackets as least 1 inch (25 mm) at each end. Secure fitting covers with manufacturer's attachments and accessories. Seal seams with tape and vapor-retarder mastic.

C. Apply insulation to valves and specialties as follows:

1. Apply premolded segments of cellular-glass insulation or glass-fiber blanket insulation to valve body. Arrange insulation to permit access to packing and to allow valve operation without disturbing insulation. For check valves, arrange insulation for access to strainer basket without disturbing insulation.

2. Apply insulation to flanges as specified for flange insulation application.

3. Use preformed heavy PVC fitting covers for valve sizes where available. Secure fitting covers with manufacturer's attachments and accessories. Seal seams with tape and vapor-retarder mastic.

4. For larger sizes where PVC fitting covers are not available, seal insulation with canvas jacket and sealing compound recommended by the insulation material manufacturer.

3.06 PREFORMED ELASTOMERIC CELLULAR THERMAL INSULATION APPLICAION

A. Apply insulation to straight pipes and tubes as follows:

1. Install pipe insulation by slitting tubular sections and applying onto pipes. Seams and butt joints shall be adhered and sealed using Armaflex 520 adhesive

2. All edges shall be clean-cut. Rough or jagged edges shall not be permitted.

B. Apply insulation to valves, flanges and fittings as follows:

1. Insulate with the same insulation thickness as the adjacent piping. Seams and butt joints shall be adhered and sealed with Armaflex 520 adhesive.

2. All edges shall be clean-cut. Rough or jagged edges shall not be permitted.

C. Outdoor insulation shall be protected as follows:

1. Furnish PVC jacket and PVC fitting covers or aluminum jackets.

2. All jackets shall have the seams located on the bottom of the pipes.

3.07 FIELD-APPLIED JACKET APPLICATION

A. Apply PVC jacket where indicated, with 1 inch (25 mm) overlap at longitudinal seams and end joints. Seal with manufacturer's recommended adhesive.

B. Apply metal jacket where indicated, with 2-inch (50 mm) overlap at longitudinal seams and end joints. Overlap longitudinal seams arranged to shed water. Seal end joints with weatherproof sealant recommended by insulation manufacturer. Secure jacket with stainless-steel band 12 inches (300 mm)es o.c. and at end joints.

C. Insulation and jacket for cold pipes shall include wicks to direct possible condensation to outside the jacket. The product shall be Knauf PermaWick or equal.

D. Indoor, Concealed Applications: Insulated pipes conveying fluids above ambient temperature shall have standard jackets, with or without vapor barrier, factory-applied or field-applied. Insulate fittings, joints and valves with insulation of like material and thickness as adjoining pipe, and finish with glass cloth and adhesive. PVC jackets shall be used.

E. Indoor, Exposed Applications: For pipe exposed in mechanical equipment rooms or in finished spaces, insulate as for concealed applications. Finish with canvas jacket; size for finish painting. PVC jackets shall be used.

F. Exterior Applications: Provide vapor-barrier jackets. Cover with aluminum jacket with seams located on bottom side of horizontal piping. Insulate fittings, joints, and valves with insulation of like material and thickness as adjoining pipe, and cover with aluminum jacket.

G. Buried Piping: Provide factory-fabricated assembly with inner all-purpose service jacket with self-sealing lap, and asphalt-impregnated open-mesh glass fabric, with 0.001 inch thick aluminum foil sandwiched between three layers of bituminous compound; outer surface faced with a polyester film.

3.08 FINISHES

A. Flexible Elastomeric Thermal Insulation: After adhesive has fully cured, apply two coats of insulation manufacturer's recommended protective coating.

3.09 PIPING SYSTEM APPLICATIONS

A. Insulation materials and thicknesses are specified in schedules at the end of this Section.

B. Items Not Insulated: Unless otherwise indicated, do not apply insulation to the following systems, materials, and equipment.

1. Flexible connectors.

2. Vibration control devices.

3. Fire-suppression piping.

4. Drainage piping located in crawl spaces, unless otherwise indicated.

5. Below-grade piping, unless otherwise indicated.

6. Chrome-plated pipes and fittings, unless potential for personal injury.

7. Air chambers, unions, strainers, check valves, plug valves, and flow regulators.

3.10 INSULATION APPLICATION SCHEDULE, GENERAL.

A. Refer to insulation application schedules for required insulation materials, vapor retarders, and field-applied jackets.

B. Application schedules identify piping system and indicate pipe size ranges and material, thickness, and jacket requirements.

3.11 INTERIOR INSULATION APPLICATION SCHEDULE

A. Service: Domestic hot and cold water

1. Insulation Material: Mineral-fiber

2. Insulation Thickness: Apply the following insulation thicknesses:

a. Copper Pipe, Up to 2 inches (50.8 mm): 1 inch (25 mm) Insulation

3. Jacket: fiber reinforced paper tape

4. Vapor Retarder Required: Yes

B. Service: Refrigeration

1. Insulation Material: Elastomeric Foam

2. Insulation Thickness: 0.75 Inches

3. Field Applied Jacket: None

4. Vapor Retarder Required: Yes

C. Storm Drain

1. Insulation Material: Mineral-fiber

2. Insulation Thickness: Apply the following insulation thicknesses:

   a. 1 inch (25 mm) Insulation

3. Jacket: fiber reinforced paper tape

4. Vapor Retarder Required: Yes

5. Application: Roof drain body and horizontal piping; for a minimum of 5ft feet from drain connection.

3.12 EXTERIOR INSULATION APPLICATION SCHEDULE

A. This application schedule is for aboveground insulation outside the building.

B. Service: Domestic, industrial and DI Water.

1. Operating Temperature: 60 to 140 deg F (15 to 60 deg C).

2. Insulation Material: Mineral-fiber

3. Insulation Thickness: Apply the following insulation thicknesses:

   a. Copper pipe, All sizes: 1 inch (25 mm) Insulation
   b. Polypropylene Pipe 1 inch (25 mm) Insulation

4. Field-Applied Jacket: Aluminum

5. Vapor Retarder Required: Yes

6. Finish: As specified in Paragraph 3.8.

C. Service: Refrigeration

1. Insulation Material: Elastomeric Foam

2. Insulation Thickness: 0.75 inch

3. Field Applied Jacket: Aluminum

4. Vapor Retarder Required: Yes

5. Finish: As specified in Paragraph 3.8

3.13 ALTERNATE INSULATION APPLICATION

A. Preformed elastomeric cellular insulation may be used as an alternative to the materials in Sections 3.11 and 3.12.

END OF SECTION

22 07 19

SECTION 22 11 16

DOMESTIC WATER PIPING

PART 1 - GENERAL

1.01 RELATED DOCUMENTS

A. Drawings and general provisions of the Contract, including General and Supplementary Conditions and Division 01 Specification Sections, apply to this Section. SUMMARY

1.02 SUMMARY

A. Section Includes:

1. Under-building-slab and aboveground domestic water pipes, tubes, and fittings inside buildings.

2. Encasement for piping.

1.03 ACTION SUBMITTALS

A. Product Data: For transition fittings and dielectric fittings.

B. Warranty Information:
1. Piping manufacturer shall submit documentation of 10-year warranty with coverage for parts, materials, labor, property damage, and personal injury.

1.04 INFORMATIONAL SUBMITTALS

A. System purging and disinfecting activities report.

B. Field quality-control reports.

PART 2 - PRODUCTS

2.01 PIPING MATERIALS

A. Comply with requirements in "Piping Schedule" Article for applications of pipe, tube, fitting materials, and joining methods for specific services, service locations, and pipe sizes.

B. Potable-water piping and components shall comply with NSF 14 and NSF 61. Plastic piping components shall be marked with "NSF-pw."

2.02 COPPER TUBE AND FITTINGS

A. Hard Copper Tube: ASTM B 88, Type L (ASTM B 88M, Type B) and ASTM B 88, Type M (ASTM B 88M, Type C)] water tube, drawn temper.

B. Soft Copper Tube: ASTM B 88, Type K (ASTM B 88M, Type A) and ASTM B 88, Type L (ASTM B 88M, Type B)] water tube, annealed temper.

C. Cast-Copper, Solder-Joint Fittings: ASME B16.18, pressure fittings.

D. Wrought-Copper, Solder-Joint Fittings: ASME B16.22, wrought-copper pressure fittings.

E. Bronze Flanges: ASME B16.24, Class 150, with solder-joint ends.

F. Copper Unions:

1. MSS SP-123.

2. Cast-copper-alloy, hexagonal-stock body.

3. Ball-and-socket, metal-to-metal seating surfaces.

G. Copper Pressure-Seal-Joint Fittings:

1. Manufacturers: Subject to compliance with requirements, available manufacturers offering products that may be incorporated into the Work include, but are not limited to, the following:

2. Basis-of-Design Product: Subject to compliance with requirements, provide product by one of the following:

a. Elkhart Products Corporation.
b. NIBCO Inc.
c. Viega.
d. Or Equivalent

3. Fittings for NPS 2 (DN 50) and Smaller: Wrought-copper fitting with EPDM-rubber, O-ring seal in each end.

4. Fittings for NPS 2-1/2 to NPS 4 (DN 65 to DN 100): Cast-bronze or wrought-copper fitting with EPDM-rubber, O-ring seal in each end.

H. Copper-Tube, Extruded-Tee Connections:

1. Manufacturers: Subject to compliance with requirements, available manufacturers offering products that may be incorporated into the Work include, but are not limited to, the following:

2. Basis-of-Design Product: Subject to compliance with requirements, provide product by one of the following:

   a. T-Drill Industries Inc.
   b. Or Equivalent
3. Description: Tee formed in copper tube according to ASTM F 2014.

2.03 PIPING JOINING MATERIALS

A. Solder Filler Metals: ASTM B 32, lead-free alloys.

B. Flux: ASTM B 813, water flushable.

C. Brazing Filler Metals: AWS A5.8/A5.8M, BCuP Series, copper-phosphorus alloys for general-duty brazing unless otherwise indicated.

2.04 ENCASEMENT FOR PIPING

A. Standard: ASTM A 674 or AWWA C105/A21.5.

2.05 TRANSITION FITTINGS

A. General Requirements:

1. Same size as pipes to be joined.

2. Pressure rating at least equal to pipes to be joined.

3. End connections compatible with pipes to be joined.

B. Fitting-Type Transition Couplings: Manufactured piping coupling or specified piping system fitting.

C. Sleeve-Type Transition Coupling: AWWA C219.

1. Manufacturers: Subject to compliance with requirements, available manufacturers offering products that may be incorporated into the Work include, but are not limited to, the following:

   a. Cascade Waterworks Manufacturing.
   b. Dresser, Inc.; Piping Specialties Products.
   c. Ford Meter Box Company, Inc. (The).
   d. JCM Industries.
   e. Romac Industries, Inc.
   f. Smith-Blair, Inc.; a Sensus company.
   g. Viking Johnson.

2.06 DIELECTRIC FITTINGS

A. General Requirements: Assembly of copper alloy and ferrous materials with separating nonconductive insulating material. Include end connections compatible with pipes to be joined.

B. Dielectric Unions:

1. Manufacturers: Subject to compliance with requirements, available manufacturers offering products that may be incorporated into the Work include, but are not limited to, the following:

   a. Capitol Manufacturing Company; member of the Phoenix Forge Group.
   b. Central Plastics Company.
   c. Hart Industries International, Inc.
   d. Jomar International.
   e. Matco-Norca.
   f. McDonald, A. Y. Mfg. Co.
   g. Watts; a division of Watts Water Technologies, Inc.
   h. Wilkins; a Zurn company.

2. Standard: ASSE 1079.

3. Pressure Rating: 125 psig (860 kPa) minimum at 180 deg F (82 deg C).

4. End Connections: Solder-joint copper alloy and threaded ferrous.

C. Dielectric Flanges:

1. Manufacturers: Subject to compliance with requirements, available manufacturers offering products that may be incorporated into the Work include, but are not limited to, the following:

   a. Capitol Manufacturing Company; member of the Phoenix Forge Group.
   b. Central Plastics Company.
   c. Matco-Norca.
   d. Watts; a division of Watts Water Technologies, Inc.
   e. Wilkins; a Zurn company.

2. Standard: ASSE 1079.

3. Factory-fabricated, bolted, companion-flange assembly.

4. Pressure Rating: 125 psig (860 kPa) minimum at 180 deg F (82 deg C)

5. End Connections: Solder-joint copper alloy and threaded ferrous; threaded solder-joint copper alloy and threaded ferrous.

D. Dielectric-Flange Insulating Kits:

1. Manufacturers: Subject to compliance with requirements, available manufacturers offering products that may be incorporated into the work include, but are not limited to, the following:

   a. Advance Products & Systems, Inc.
   b. Calpico, Inc.
   c. Central Plastics Company.
   d. Pipeline Seal and Insulator, Inc.

2. Nonconducting materials for field assembly of companion flanges.

3. Pressure Rating: 150 psig (1035 kPa)

4. Gasket: Neoprene or phenolic.

5. Bolt Sleeves: Phenolic or polyethylene.

6. Washers: Phenolic with steel backing washers.

E. Dielectric Nipples:

1. Manufacturers: Subject to compliance with requirements, available manufacturers offering products that may be incorporated into the Work include, but are not limited to, the following:

   a. Elster Perfection Corporation.
   b. Grinnell Mechanical Products; Tyco Fire Products LP.
   c. Matco-Norca.
   d. Precision Plumbing Products, Inc.
   e. Victaulic Company.

2. Standard: IAPMO PS 66.

3. Electroplated steel nipple complying with ASTM F 1545.

4. Pressure Rating and Temperature: 300 psig (2070 kPa) at 225 deg F (107 deg C)

5. End Connections: Male threaded or grooved.

6. Lining: Inert and noncorrosive, propylene.

PART 3 - EXECUTION

3.01 EARTHWORK

A. Comply with requirements in Division 2 Earthwork for excavating, trenching, and backfilling.

3.02 PIPING INSTALLATION

A. Drawing plans, schematics, and diagrams indicate general location and arrangement of domestic water piping. Indicated locations and arrangements are used to size pipe and calculate friction loss, expansion, and other design considerations. Install piping as indicated unless deviations to layout are approved on coordination drawings.

B. Install copper tubing under building slab according to CDA's "Copper Tube Handbook."

C. Install ductile-iron piping under building slab with restrained joints according to AWWA C600 and AWWA M41.

D. Install underground copper tube in PE encasement according to ASTM A 674 or AWWA C105/A21.5.

E. Install shutoff valve, hose-end drain valve, strainer, pressure gage, and test tee with valve inside the building at each domestic water-service entrance.

F. Install shutoff valve immediately upstream of each dielectric fitting.

G. Install domestic water piping level with 0.25 percent slope downward toward drain and plumb.

H. Rough-in domestic water piping for water-meter installation according to utility company's requirements.

I. Install piping concealed from view and protected from physical contact by building occupants unless otherwise indicated and except in equipment rooms and service areas.

J. Install piping indicated to be exposed and piping in equipment rooms and service areas at right angles or parallel to building walls. Diagonal runs are prohibited unless specifically indicated otherwise.

K. Install piping above accessible ceilings to allow sufficient space for ceiling panel removal, and coordinate with other services occupying that space.

L. Install piping to permit valve servicing.

M. Install nipples, unions, special fittings, and valves with pressure ratings the same as or higher than the system pressure rating used in applications below unless otherwise indicated.

N. Install piping free of sags and bends.

O. Install fittings for changes in direction and branch connections.

P. Install unions in copper tubing at final connection to each piece of equipment, machine, and specialty.

Q. Install thermostats in hot-water circulation piping.

R. Install thermometers on outlet piping from each water heater.

S. Install sleeves for piping penetrations of walls, ceilings, and floors. Comply with requirements for sleeves specified in Section 220517 "Sleeves and Sleeve Seals for Plumbing Piping."

T. Install sleeve seals for piping penetrations of concrete walls and slabs. Comply with requirements for sleeve seals specified in Section 220517 "Sleeves and Sleeve Seals for Plumbing Piping."

U. Install escutcheons for piping penetrations of walls, ceilings, and floors. Comply with requirements for escutcheons specified in Section 220518 "Escutcheons for Plumbing Piping."

3.03 JOINT CONSTRUCTION

A. Ream ends of pipes and tubes and remove burrs. Bevel plain ends of steel pipe.

B. Remove scale, slag, dirt, and debris from inside and outside of pipes, tubes, and fittings before assembly.

C. Threaded Joints: Thread pipe with tapered pipe threads according to ASME B1.20.1. Cut threads full and clean using sharp dies. Ream threaded pipe ends to remove burrs and restore full ID. Join pipe fittings and valves as follows:
   1. Apply appropriate tape or thread compound to external pipe threads.
   2. Damaged Threads: Do not use pipe or pipe fittings with threads that are corroded or damaged.
   3. Do NOT thread polypropylene pipe. Use threaded transition fitting.

D. Brazed Joints for Copper Tubing: Comply with CDA's "Copper Tube Handbook," "Brazed Joints" chapter.

E. Soldered Joints for Copper Tubing: Apply ASTM B 813, water-flushable flux to end of tube. Join copper tube and fittings according to ASTM B 828 or CDA's "Copper Tube Handbook."

F. Pressure-Sealed Joints for Copper Tubing: Join copper tube and pressure-seal fittings with tools recommended by fitting manufacturer.

G. Push-on Joints for Copper Tubing: Clean end of tube. Measure insertion depth with manufacturer's depth gage. Join copper tube and push-on-joint fittings by inserting tube to measured depth.

H. Extruded-Tee Connections: Form tee in copper tube according to ASTM F 2014. Use tool designed for copper tube; drill pilot hole, form collar for outlet, dimple tube to form seating stop, and braze branch tube into collar.

I. Flanged Joints: Select appropriate asbestos-free, nonmetallic gasket material in size, type, and thickness suitable for domestic water service. Join flanges with gasket and bolts according to ASME B31.9.

J. Joints for Dissimilar-Material Piping: Make joints using adapters compatible with materials of both piping systems.

3.04 TRANSITION FITTING INSTALLATION

A. Install transition couplings at joints of dissimilar piping.

B. Transition Fittings in Underground Domestic Water Piping:

1. Fittings for NPS 1-1/2 (DN 40) and Smaller: Fitting-type coupling.

2. Fittings for NPS 2 (DN 50) and Larger: Sleeve-type coupling.

C. Transition Fittings in Aboveground Domestic Water Piping NPS 2 (DN 50) and Smaller: Plastic-to-metal transition fittings or unions.

3.05 DIELECTRIC FITTING INSTALLATION

A. Install dielectric fittings in piping at connections of dissimilar metal piping and tubing.

B. Dielectric Fittings for NPS 2 (DN 50) and Smaller: Use dielectric couplings or nipples.

3.06 HANGER AND SUPPORT INSTALLATION

A. Comply with requirements for pipe hanger, support products, and installation in Section Table 313.1 in 2012 Uniform Plumbing Code (UPC).

1. Vertical Piping: MSS Type 8 or 42, clamps.

2. Individual, Straight, Horizontal Piping Runs:

a. 100 Feet (30 m) and Less: MSS Type 1, adjustable, steel clevis hangers.

b. Longer Than 100 Feet (30 m): MSS Type 43, adjustable roller hangers.

c. Longer Than 100 Feet (30 m) if Indicated: MSS Type 49, spring cushion rolls.

3. Multiple, Straight, Horizontal Piping Runs 100 Feet (30 m) or Longer: MSS Type 44, pipe rolls. Support pipe rolls on trapeze.

4. Base of Vertical Piping: MSS Type 52, spring hangers.

B. Support vertical piping and tubing at base and at each floor.

C. Rod diameter may be reduced one size for double-rod hangers, to a minimum of 3/8 inch (10 mm).

D. Install hangers for copper tubing with the following maximum horizontal spacing and minimum rod diameters:
   1. NPS 3/4 (DN 20) and Smaller: 60 inches (1500 mm) with 3/8-inch (10-mm) rod.
   2. NPS 1 and NPS 1-1/4 (DN 25 and DN 32): 72 inches (1800 mm) with 3/8-inch (10-mm) rod.
   3. NPS 1-1/2 and NPS 2 (DN 40 and DN 50): 96 inches (2400 mm) with 3/8-inch (10-mm) rod.
   4. NPS 2-1/2 (DN 65): 108 inches (2700 mm) with 1/2-inch (13-mm) rod.

E. Install supports for vertical copper tubing every 10 feet (3 m).

F. Support piping and tubing not listed in this article according to MSS SP-69 and manufacturer's written instructions.

3.07 CONNECTIONS

A. Drawings indicate general arrangement of piping, fittings, and specialties.

B. When installing piping adjacent to equipment and machines, allow space for service and maintenance.

C. Connect domestic water piping to exterior water-service piping. Use transition fitting to join dissimilar piping materials.

D. Connect domestic water piping to water-service piping with shutoff valve; extend and connect to the following:
   1. Water Heaters: Cold-water inlet and hot-water outlet piping in sizes indicated, but not smaller than sizes of water heater connections.
   2. Plumbing Fixtures: Cold- and hot-water-supply piping in sizes indicated, but not smaller than that required by plumbing code.
   3. Equipment: Cold- and hot-water-supply piping as indicated, but not smaller than equipment connections. Provide shutoff valve and union for each connection. Use flanges instead of unions for NPS 2-1/2 (DN 65) and larger.

3.08 IDENTIFICATION

A. Label all domestic water piping with size, type, and direction of flow.

B. Label pressure piping with system operating pressure.

3.09 FIELD QUALITY CONTROL

A. Perform the following tests and inspections:

1. Piping Inspections:

a. Do not enclose, cover, or put piping into operation until it has been inspected and approved by authorities having jurisdiction.

b. During installation, notify authorities having jurisdiction at least one day before inspection must be made. Perform tests specified below in presence of authorities having jurisdiction:

1) Roughing-in Inspection: Arrange for inspection of piping before concealing or closing in after roughing in and before setting fixtures.

2) Final Inspection: Arrange for authorities having jurisdiction to observe tests specified in "Piping Tests" Subparagraph below and to ensure compliance with requirements.

c. Reinspection: If authorities having jurisdiction find that piping will not pass tests or inspections, make required corrections and arrange for reinspection.

d. Reports: Prepare inspection reports and have them signed by authorities having jurisdiction.

2. Piping Tests:

a. Fill domestic water piping. Check components to determine that they are not air bound and that piping is full of water.

b. Test for leaks and defects in new piping and parts of existing piping that have been altered, extended, or repaired. If testing is performed in segments, submit a separate report for each test, complete with diagram of portion of piping tested.

c. Leave new, altered, extended, or replaced domestic water piping uncovered and unconcealed until it has been tested and approved. Expose work that was covered or concealed before it was tested.

d. Cap and subject piping to static water pressure of 50 psig (345 kPa) above operating pressure, without exceeding pressure rating of piping system materials. Isolate test source and allow it to stand for four hours. Leaks and loss in test pressure constitute defects that must be repaired.

e. Repair leaks and defects with new materials, and retest piping or portion thereof until satisfactory results are obtained.

f. Prepare reports for tests and for corrective action required.

B. Domestic water piping will be considered defective if it does not pass tests and inspections.

C. Prepare test and inspection reports.

3.10 ADJUSTING

A. Perform the following adjustments before operation:

1. Close drain valves, hydrants, and hose bibbs.

2. Open shutoff valves to fully open position.

3. Open throttling valves to proper setting.

4. Adjust balancing valves in hot-water-circulation return piping to provide adequate flow.

   a. Manually adjust ball-type balancing valves in hot-water-circulation return piping to provide hot-water flow in each branch.

   b. Adjust calibrated balancing valves to flows indicated.

5. Remove plugs used during testing of piping and for temporary sealing of piping during installation.

6. Remove and clean strainer screens. Close drain valves and replace drain plugs.

7. Remove filter cartridges from housings and verify that cartridges are as specified for application where used and are clean and ready for use.

8. Check plumbing specialties and verify proper settings, adjustments, and operation.

3.11 CLEANING

A. Clean and disinfect potable domestic water piping as follows:

1. Purge new piping and parts of existing piping that have been altered, extended, or repaired before using.

2. Use purging and disinfecting procedures prescribed by authorities having jurisdiction; if methods are not prescribed, use procedures described in either AWWA C651 or AWWA C652 or follow procedures described below:

   a. Flush piping system with clean, potable water until dirty water does not appear at outlets.

   b. Fill and isolate system according to either of the following:

      1) Fill system or part thereof with water/chlorine solution with at least 50 ppm (50 mg/L) of chlorine. Isolate with valves and allow to stand for 24 hours.

      2) Fill system or part thereof with water/chlorine solution with at least 200 ppm (200 mg/L) of chlorine. Isolate and allow to stand for three hours.

   c. Flush system with clean, potable water until no chlorine is in water coming from system after the standing time.

   d. Repeat procedures if biological examination shows contamination.

   e. Submit water samples in sterile bottles to authorities having jurisdiction.

B. Clean non-potable domestic water piping as follows:

1. Purge new piping and parts of existing piping that have been altered, extended, or repaired before using.

2. Use purging procedures prescribed by authorities having jurisdiction or; if methods are not prescribed, follow procedures described below:

   a. Flush piping system with clean, potable water until dirty water does not appear at outlets.
   b. Submit water samples in sterile bottles to authorities having jurisdiction. Repeat procedures if biological examination shows contamination.

C. Prepare and submit reports of purging and disinfecting activities. Include copies of water-sample approvals from authorities having jurisdiction.

D. Clean interior of domestic water piping system. Remove dirt and debris as work progresses.

3.12 PIPING SCHEDULE

A. Transition and special fittings with pressure ratings at least equal to piping rating may be used in applications below unless otherwise indicated.

B. Flanges and unions may be used for aboveground piping joints unless otherwise indicated.

C. Fitting Option: Extruded-tee connections and brazed joints may be used on aboveground copper tubing.

D. Under-building-slab, domestic water, building-service piping, NPS 3 (DN 80) and smaller, shall be one of the following:
   1. Hard or soft copper tube, ASTM B 88, Type L (ASTM B 88M, Type B); [wrought-copper, solder-joint fittings; and brazed] [copper pressure-seal-joint fittings; and pressure-sealed] joints.

E. Aboveground domestic water piping, NPS 2 (DN 50) and smaller shall be one of the following:
   1. Hard copper tube, ASTM B 88, Type L (ASTM B 88M, Type B) or ASTM B 88, Type M (ASTM B 88M, Type C); cast- or wrought-copper, solder-joint fittings; and brazed or soldered joints.

   2. Hard copper tube, ASTM B 88, Type L ASTM B 88M, Type B) or ASTM B 88, Type M (ASTM B 88M, Type C); copper pressure-seal-joint fittings; and pressure-sealed joints.

   3. Hard copper tube, ASTM B 88, Type L (ASTM B 88M, Type B) or [ASTM B 88, Type M (ASTM B 88M, Type C); copper push-on-joint fittings; and push-on joints.

3.13 VALVE SCHEDULE

A. Drawings indicate valve types to be used. Where specific valve types are not indicated, the following requirements apply:

1. Shutoff Duty: Use ball or gate valves for piping NPS 2 (DN 50) and smaller. Use butterfly, ball, or gate valves with flanged ends for piping NPS 2-1/2 (DN 65) and larger.

2. Drain Duty: Hose-end drain valves.

B. Use check valves to maintain correct direction of domestic water flow to and from equipment.

C. Iron grooved-end valves may be used with grooved-end piping.

END OF SECTION

22 11 16

THIS PAGE IS BLANK

SECTION 22 13 16

SANITARY WASTE AND VENT PIPING

PART 1 - GENERAL

1.01 RELATED DOCUMENTS

A. Drawings and general provisions of the Contract, including General and Supplementary Conditions and Division 01 Specification Sections, apply to this Section.

1.02 SUMMARY

A. Section Includes:

1. Pipe, tube, and fittings.

2. Specialty pipe fittings.

B. Furnish and install all concrete, grout, and other required materials to fill all blockouts and/or sleeves left open for this Contractor's convenience or for the installation of this work.

1.03 PERFORMANCE REQUIREMENTS

A. Components and installation shall be capable of withstanding the following minimum working pressure unless otherwise indicated:

1. Soil, Waste, and Vent Piping: 10-foot head of water (30 kPa).

2. Waste, Force-Main Piping: 50 psig (345 kPa).

B. Seismic Performance: Soil, waste, and vent piping and support and installation shall withstand the effects of earthquake motions determined according to ASCE/SEI 7

1.04 SCOPE

A. Complete soil, waste, and vent system, and associated miscellaneous accessories. This section shall include all work within the building to a point approximately 5'-0" outside the building, or as otherwise indicated.

B. Coordinate with Division 33 site utility drawings and specifications.

C. Plumbing equipment drains.

1.05 ACTION SUBMITTALS

A. Product Data: For each type of product indicated.

B. Shop Drawings: For solvent drainage system. Include plans, elevations, sections, and details.

1.06 INFORMATIONAL SUBMITTALS

A. Seismic Qualification Certificates: For waste and vent piping, accessories, and components, from manufacturer.

1. Basis for Certification: Indicate whether withstand certification is based on actual test of assembled components or on calculation.

2. Detailed description of piping anchorage devices on which the certification is based and their installation requirements.

B. Field quality-control reports.

1.07 QUALITY ASSURANCE

A. Piping materials shall bear label, stamp, or other markings of specified testing agency.

B. Comply with NSF/ANSI 14, "Plastics Piping Systems Components and Related Materials," for plastic piping components. Include marking with "NSF-dwv" for plastic drain, waste, and vent piping and "NSF-sewer" for plastic sewer piping.

PART 2 - PRODUCTS

2.01 PIPING MATERIALS

A. Comply with requirements in "Piping Schedule" Article at the end of this specification section for applications of pipe, tube, fitting materials, and joining methods for specific services, service locations, and pipe sizes.

2.02 HUBLESS, CAST-IRON SOIL PIPE AND FITTINGS

A. Pipe and Fittings: ASTM A 888 or CISPI 301.

B. Solvent Stack Fittings: ASME B16.45 or ASSE 1043, hubless, cast-iron aerator and deaerator drainage fittings.

C. CISPI, Hubless-Piping Couplings:

1. No-hub cast iron pipe shall conform to CISPI Standard 301 and shall be marked with CISPI Label.

2. Standards: ASTM C 1277 and CISPI 310.

3. Description:

a. Stainless-steel corrugated shield with stainless-steel bands and tightening devices

b. ASTM C 564, rubber sleeve with integral, center pipe stop

c. All couplings to be a minimum of 4-band

D. Heavy-Duty, Hubless-Piping Couplings:

1. Standards: ASTM C 1277 and ASTM C 1540.

2. Description:
   a. Stainless-steel shield with stainless-steel bands and tightening devices
   b. ASTM C 564, rubber sleeve with integral, center pipe stop
   c. All couplings to be a minimum of 4-band

E. Cast-Iron, Hubless-Piping Couplings:

1. Standard: ASTM C 1277.

2. Description: Two-piece ASTM A 48/A 48M, cast-iron housing; stainless-steel bolts and nuts; and ASTM C 564, rubber sleeve with integral, center pipe stop.

2.03 POLYVINYL CHLORIDE (PVC) SEWER PIPE

A. Schedule 40, conforming to ASTM D3034

B. Fittings for PVC piping system shall be Schedule 40 drainage pattern, solvent cement type conforming to ASTM B-2855 or elastomeric seal type conforming to ASTM D-3212.

C. Joints for PVC piping system shall be either solvent cement type conforming to ASTM D-2855 or elastomeric seal type conforming to ASTM D-3212, except all joints above grade shall be solvent cement.

2.04 SPECIALTY PIPE FITTING

A. Transition Couplings:

1. General Requirements: Fitting or device for joining piping with small differences in OD's or of different materials. Include end connections same size as and compatible with pipes to be joined.

2. Fitting-Type Transition Couplings: Manufactured piping coupling or specified piping system fitting.

3. Unshielded, Nonpressure Transition Couplings:
   a. Standard: ASTM C 1173.
   b. Description: Elastomeric, sleeve-type, reducing or transition pattern. Include shear ring and corrosion-resistant-metal tension band and tightening mechanism on each end.
   c. Sleeve Materials:
      1) For Cast-Iron Soil Pipes: ASTM C 564, rubber.
      2) For Plastic Pipes: ASTM F 477, elastomeric seal or ASTM D 5926, PVC.

3) For Dissimilar Pipes: ASTM D 5926, PVC or other material compatible with pipe materials being joined.

4. Shielded, Nonpressure Transition Couplings:
   a. Standard: ASTM C 1460.
   b. Description: Elastomeric or rubber sleeve with full-length, corrosion-resistant outer shield and corrosion-resistant-metal tension band and tightening mechanism on each end.

B. Dielectric Fittings:

1. General Requirements: Assembly of copper alloy and ferrous materials with separating nonconductive insulating material. Include end connections compatible with pipes to be joined.

2. Dielectric Unions:
   a. Description:
      1) Standard: ASSE 1079.
      2) Pressure Rating: 125 psig (860 kPa) minimum at 180 deg F (82 deg C)
      3) End Connections: Solder-joint copper alloy and threaded ferrous.

3. Dielectric Flanges:
   a. Description:
      1) Standard: ASSE 1079.
      2) Factory-fabricated, bolted, companion-flange assembly.
      3) Pressure Rating: 125 psig (860 kPa) minimum at 180 deg F (82 deg C)
      4) End Connections: Solder-joint copper alloy and threaded ferrous; threaded solder-joint copper alloy and threaded ferrous.

4. Dielectric Nipples:
   a. Description:
      1) Standard: IAPMO PS 66
      2) Electroplated steel nipple.
      3) Pressure Rating: 300 psig (2070 kPa) at 225 deg F (107 deg C).
      4) End Connections: Male threaded or grooved.
      5) Lining: Inert and noncorrosive, propylene.

PART 3 - EXECUTION

3.01 EARTH MOVING

A. Comply with requirements for excavating, trenching, and backfilling specified in Section Division 2 Earthwork.

3.02 PIPING INSTALLATION

A. Drawing plans, schematics, and diagrams indicate general location and arrangement of piping systems. Indicated locations and arrangements were used to size pipe and calculate friction loss, expansion, pump sizing, and other design considerations. Install piping as indicated unless deviations to layout are approved on coordination drawings.

B. Install piping in concealed locations unless otherwise indicated and except in equipment rooms and service areas.

C. Install piping indicated to be exposed and piping in equipment rooms and service areas at right angles or parallel to building walls. Diagonal runs are prohibited unless specifically indicated otherwise.

D. Install piping above accessible ceilings to allow sufficient space for ceiling panel removal.

E. Install piping to permit valve servicing.

F. Install piping free of sags and bends.

G. Install fittings for changes in direction and branch connections.

H. Install piping to allow application of insulation.

I. Make changes in direction for soil and waste drainage and vent piping using appropriate branches, bends, and long-sweep bends. Sanitary tees and short-sweep 1/4 bends may be used on vertical stacks if change in direction of flow is from horizontal to vertical. Use long-turn, double Y-branch and 1/8-bend fittings if two fixtures are installed back to back or side by side with common drain pipe. Straight tees, elbows, and crosses may be used on vent lines. Do not change direction of flow more than 90 degrees. Use proper size of standard increasers and reducers if pipes of different sizes are connected. Reducing size of drainage piping in direction of flow is prohibited.

J. Lay buried building drainage piping beginning at low point of each system. Install true to grades and alignment indicated, with unbroken continuity of invert. Place hub ends of piping upstream. Install required gaskets according to manufacturer's written instructions for use of lubricants, cements, and other installation requirements. Maintain swab in piping and pull past each joint as completed.

K. Install soil and waste drainage and vent piping at the following minimum slopes unless otherwise indicated:

1. Install piping at indicated slopes. All soil, waste, and vent piping shall be properly graded and installed in strict accordance with all applicable codes and requirements.

2. Building Sanitary Drain: 2 percent downward in direction of flow for piping NPS 3 (DN 80) and smaller; 2 percent downward in direction of flow for piping NPS 4 (DN 100) and larger.

3. Horizontal Sanitary Drainage Piping: 2 percent downward in direction of flow.

4. Vent Piping: 1 percent down toward vertical fixture vent or toward vent stack.

L. Install cast-iron soil piping according to CISPI's "Cast Iron Soil Pipe and Fittings Handbook," Chapter IV, "Installation of Cast Iron Soil Pipe and Fittings."

1. Install encasement on underground piping according to ASTM A 674 or AWWA C105/A 21.5.

M. Plumbing Specialties:

1. Provide cleanouts to comply with local codes and Authority Having Jurisdiction.

2. Install cleanouts at grade and extend to where building sanitary drains connect to building sanitary sewers in sanitary drainage gravity-flow piping. Install cleanout fitting with closure plug inside the building in sanitary drainage force-main piping.

3. Install drains in sanitary drainage gravity-flow piping.

N. Do not enclose, cover, or put piping into operation until it is inspected and approved by authorities having jurisdiction.

O. Install sleeves for piping penetrations of walls, ceilings, and floors. Comply with requirements for sleeves specified in Section 220517 "Sleeves and Sleeve Seals for Plumbing Piping."

P. Install sleeve seals for piping penetrations of concrete walls and slabs. Comply with requirements for sleeve seals specified in Section 220517 "Sleeves and Sleeve Seals for Plumbing Piping."

Q. Install escutcheons for piping penetrations of walls, ceilings, and floors. Comply with requirements for escutcheons specified in Section 220518 "Escutcheons for Plumbing Piping."

3.03 FLASHING

A. Flashing for piping through built-up roofing with lead flashing, weight of not less than four pounds per square foot, extending at least 12" in all directions under roofing and up pipe. Cap flash pipe and turn down inside 1" approximately. Run all pipes extending through roof prior to roof installation. Flashing shall be two-piece type, base and cap flashing.

B. Flash piping through the membrane roofing systems with premolded pipe seal elastomeric flashing and sealants that are compatible with EPDM single ply membrane. The flashing material and installation procedure shall be in accordance with the roofing manufacturer's recommendations.

3.04 PVC PIPING SYSTEMS

A. Installation of PVC piping systems within the building shall be in accordance with all applicable plumbing and building codes and ordinances. No exposed piping or fittings shall be installed within the building ceiling space and return air plenums unless the material complies with all code requirements, including required fire and smoke ratings, or is properly protected to meet the intent of the code. Penetrations of fire rated barriers shall be provided with cast iron as specified in this section, or as otherwise approved and accepted by the applicable code authority. Piping above grade shall be installed with uniform slope and shall be properly supported to avoid sagging or bending of horizontal or vertical lines due to insufficient support or thermal expansion/contraction. All piping shall be supported and installed in strict accordance with manufacturer's recommendations.

B. PVC pipe and fittings exposed within building return air plenums shall be covered with an approved fire rate insulation material.

3.05 JOINT CONSTRUCTION

A. Join hubless, cast-iron soil piping according to CISPI 310 and CISPI's "Cast Iron Soil Pipe and Fittings Handbook" for hubless-piping coupling joints.

B. Threaded Joints: Thread pipe with tapered pipe threads according to ASME B1.20.1. Cut threads full and clean using sharp dies. Ream threaded pipe ends to remove burrs and restore full ID. Join pipe fittings and valves as follows:

1. Apply appropriate tape or thread compound to external pipe threads unless dry seal threading is specified.

2. Damaged Threads: Do not use pipe or pipe fittings with threads that are corroded or damaged. Do not use pipe sections that have cracked or open welds.

C. Join copper tube and fittings with soldered joints according to ASTM B 828. Use ASTM B 813, water-flushable, lead-free flux and ASTM B 32, lead-free-alloy solder.

D. Grooved Joints: Cut groove ends of pipe according to AWWA C606. Lubricate and install gasket over ends of pipes or pipe and fitting. Install coupling housing sections, over gasket, with keys seated in piping grooves. Install and tighten housing bolts.

E. Flanged Joints: Align bolt holes. Select appropriate gasket material, size, type, and thickness. Install gasket concentrically positioned. Use suitable lubricants on bolt threads. Torque bolts in cross pattern.

3.06 SPECIALTY PIPE FITTING INSTALLATION

A. Transition Couplings:

1. Install transition couplings at joints of piping with small differences in OD's.

2. In Drainage Piping: Unshielded or Shielded, nonpressure transition couplings.

3. In Aboveground Force Main Piping: Fitting-type transition couplings.

4. In Underground Force Main Piping:
   a. NPS 1-1/2 (DN 40) and Smaller: Fitting-type transition couplings.
   b. NPS 2 (DN 50) and Larger: Pressure transition couplings.

B. Dielectric Fittings:

1. Install dielectric fittings in piping at connections of dissimilar metal piping and tubing.

2. Dielectric Fittings for NPS 2 (DN 50) and Smaller: Use dielectric nipples or unions.

3. Dielectric Fittings for NPS 2-1/2 to NPS 4 (DN 65 to DN 100): Use dielectric flanges or nipples.

3.07 VALVE INSTALLATION

A. Shutoff Valves:

1. Install shutoff valve on each sewage pump discharge.

2. Install gate or full-port ball valve for piping NPS 2 (DN 50) and smaller.

3. Install gate valve for piping NPS 2-1/2 (DN 65) and larger.

B. Check Valves: Install swing check valve, between pump and shutoff valve, on each sewage pump discharge.

3.08 HANGER AND SUPPORT INSTALLATION

A. Comply with requirements for pipe hanger and support devices and installation in Section Table 313.1 in 2012 Uniform Plumbing Code (UPC).

1. Vertical Piping: MSS Type 8 or Type 42, clamps.

2. Install individual, straight, horizontal piping runs:
   a. 100 Feet (30 m) and Less: MSS Type 1, adjustable, steel clevis hangers.
   b. Longer Than 100 Feet (30 m): MSS Type 43, adjustable roller hangers.
   c. Longer Than 100 Feet (30 m) if Indicated: MSS Type 49, spring cushion rolls.

3. Multiple, Straight, Horizontal Piping Runs 100 Feet (30 m) or Longer: MSS Type 44, pipe rolls. Support pipe rolls on trapeze.

4. Base of Vertical Piping: MSS Type 52, spring hangers.

B. Support horizontal piping and tubing within 12 inches (300 mm) of each fitting, valve, and coupling.

C. Support vertical piping and tubing at base and at each floor.

D. Rod diameter may be reduced one size for double-rod hangers, with 3/8-inch (10-mm) minimum rods.

E. Install hangers for cast-iron soil piping with the following maximum horizontal spacing and minimum rod diameters:

1. NPS 1-1/2 and NPS 2 (DN 40 and DN 50): 60 inches (1500 mm) with 3/8-inch (10-mm) rod.

2. NPS 3 (DN 80): 60 inches (1500 mm) with 1/2-inch (13-mm) rod.

3. NPS 4 and NPS 5 (DN 100 and DN 125): 60 inches (1500 mm) with 5/8-inch (16-mm) rod.

4. NPS 6 and NPS 8 (DN 150 and DN 200): 60 inches (1500 mm) with 3/4-inch (19-mm) rod.

5. NPS 10 and NPS 12 (DN 250 and DN 300): 60 inches (1500 mm) with 7/8-inch (22-mm) rod.

6. Spacing for 10-foot (3-m) lengths may be increased to 10 feet (3 m). Spacing for fittings is limited to 60 inches (1500 mm).

F. Install supports for vertical cast-iron soil piping every 15 feet (4.5 m).

G. Support piping and tubing not listed above according to MSS SP-69 and manufacturer's written instructions.

3.09 CONNECTIONS

A. Drawings indicate general arrangement of piping, fittings, and specialties.

B. Connect soil and waste piping to exterior sanitary sewerage piping. Use transition fitting to join dissimilar piping materials.

C. Coordinate connection to existing main with village.

D. Connect drainage and vent piping to the following:

1. Plumbing Fixtures: Connect drainage piping in sizes indicated, but not smaller than required by plumbing code.

2. Plumbing Fixtures and Equipment: Connect atmospheric vent piping in sizes indicated, but not smaller than required by authorities having jurisdiction.

3. Plumbing Specialties: Connect drainage and vent piping in sizes indicated, but not smaller than required by plumbing code.

4. Install test tees (wall cleanouts) in conductors near floor and floor cleanouts with cover flush with floor.

5. Install horizontal backwater valves with cleanout cover flush with floor.

6. Equipment: Connect drainage piping as indicated. Provide shutoff valve if indicated and union for each connection. Use flanges instead of unions for connections NPS 2-1/2 (DN 65) and larger.

E. Connect force-main piping to the following:

1. Sanitary Sewer: To exterior force main.

2. Sewage Pump: To sewage pump discharge.

F. Where installing piping adjacent to equipment, allow space for service and maintenance of equipment.

G. Make connections according to the following unless otherwise indicated:

1. Install unions, in piping NPS 2 (DN 50) and smaller, adjacent to each valve and at final connection to each piece of equipment.

2. Install flanges, in piping NPS 2-1/2 (DN 65) and larger, adjacent to flanged valves and at final connection to each piece of equipment.

3.10 IDENTIFICATION

A. Identify exposed sanitary waste and vent piping.

3.11 FIELD QUALITY CONTROL

A. During installation, notify authorities having jurisdiction at least 24 hours before inspection must be made. Perform tests specified below in presence of authorities having jurisdiction.

1. Roughing-in Inspection: Arrange for inspection of piping before concealing or closing-in after roughing-in and before setting fixtures.

2. Final Inspection: Arrange for final inspection by authorities having jurisdiction to observe tests specified below and to ensure compliance with requirements.

B. Reinspection: If authorities having jurisdiction find that piping will not pass test or inspection, make required corrections and arrange for reinspection.

C. Reports: Prepare inspection reports and have them signed by authorities having jurisdiction.

D. Test sanitary drainage and vent piping according to procedures of authorities having jurisdiction or, in absence of published procedures, as follows:

1. Test for leaks and defects in new piping and parts of existing piping that have been altered, extended, or repaired. If testing is performed in segments, submit separate report for each test, complete with diagram of portion of piping tested.

2. Leave uncovered and unconcealed new, altered, extended, or replaced drainage and vent piping until it has been tested and approved. Expose work that was covered or concealed before it was tested.

3. Roughing-in Plumbing Test Procedure: Test drainage and vent piping except outside leaders on completion of roughing-in. Close openings in piping system and fill with water to point of overflow, but not less than 10-foot head of water (30 kPa). From 15 minutes before inspection starts to completion of inspection, water level must not drop. Inspect joints for leaks.

4. Finished Plumbing Test Procedure: After plumbing fixtures have been set and traps filled with water, test connections and prove they are gastight and watertight. Plug vent-stack openings on roof and building drains where they leave building. Introduce air into piping system equal to pressure of 1-inch wg (250 Pa). Use U-tube or manometer inserted in trap of water closet to measure this pressure. Air pressure must remain constant without introducing additional air throughout period of inspection. Inspect plumbing fixture connections for gas and water leaks.

5. Repair leaks and defects with new materials and retest piping, or portion thereof, until satisfactory results are obtained.

6. Prepare reports for tests and required corrective action.

3.12 CLEANING AND PROTECTION

A. Clean interior of piping. Remove dirt and debris as work progresses.

B. Protect drains during remainder of construction period to avoid clogging with dirt and debris and to prevent damage from traffic and construction work.

C. Place plugs in ends of uncompleted piping at end of day and when work stops.

D. Exposed ABS and PVC Piping: Protect plumbing vents exposed to sunlight with two coats of water-based latex paint.

3.13 PIPING SCHEDULE

A. Flanges and unions may be used on aboveground pressure piping unless otherwise indicated.

B. Aboveground, soil and waste piping NPS 4 (DN 100) and smaller shall be any of the following:

1. Service class, cast-iron soil pipe and fittings; gaskets; and gasketed joints.

2. Hubless, cast-iron soil pipe and fittings and sovent stack fittings; heavy-duty hubless-piping couplings; and coupled joints.

C. Aboveground, soil and waste piping NPS 5 (DN 125) and largershall be any of the following:

1. Service class, cast-iron soil pipe and fittings; gaskets; and gasketed joints.

2. Hubless, cast-iron soil pipe and fittings and sovent stack fittings; heavy-duty hubless-piping couplings; and coupled joints.

D. Aboveground, vent piping NPS 4 (DN 100) and smaller shall be any of the following:

1. Service class, cast-iron soil pipe and fittings; gaskets; and gasketed joints.

2. Hubless, cast-iron soil pipe and fittings; heavy-duty hubless-piping couplings; and coupled joints.

E. Aboveground, vent piping NPS 5 (DN 125) and larger shall be any of the following:

1. Service class, cast-iron soil pipe and fittings; gaskets; and gasketed joints.

2. Hubless, cast-iron soil pipe and fittings; heavy-duty hubless-piping couplings; and coupled joints.

F. Underground, soil, waste, and vent piping NPS 4 (DN 100) and smaller shall be any of the following:

1. Service class, cast-iron soil piping; gaskets; and gasketed joints.

2. Polyvinyl chloride (PVC) sewer pipe, Schedule 40, solvent joints.

G. Underground, soil and waste piping NPS 5 (DN 125) and larger shall be any of the following:

1. Service class, cast-iron soil piping; gaskets; and gasketed joints.

2. Polyvinyl chloride (PVC) sewer pipe, Schedule 40, solvent joints.

END OF SECTION

22 13 16

SECTION 22 14 13

RAIN DRAINAGE PIPING

PART 1 - GENERAL

1.01 SECTION INCLUDES

A. Building storm drainage piping, fittings, and accessories within 5’-0” of building wall.

1.02 SUBMITTALS

A. Submit the following in accordance with Section 01 3300, Submittal Procedures:

1. Catalog data on pipe materials, fittings and accessories.

2. Installation instructions for accessories.

PART 2 - PRODUCTS

2.01 STORM DRAINAGE PIPING, ABOVE GROUND

A. Cast Iron Pipe and Fittings: CISPI 301 hubless, service weight.

1. Joints: CISPI 310, neoprene gaskets and stainless steel clamp/shield assemblies. Joints shall be 4-band, no hub couplings.

2.02 STORM DRAINAGE PIPING, BELOW GROUND

A. Polyvinyl chloride (PVC) pipe, Schedule 40, conforming to ASTM D3034, solvent joints.

2.03 ROOF DRAINS

A. See Plumbing Schedule. Refer to manufacturer’s catalog data for selection criteria.

2.04 CLEANOUTS

A. Manufacturer: J.R. Smith Mfg. Co.

B. See Plumbing Schedule. Refer to manufacturer’s catalog data for selection criteria.

PART 3 - EXECUTION

3.01 EXAMINATION

A. Verify excavations are to required grade. Do not over excavate.

3.02 PREPARATION

A. Comply with Uniform Plumbing Code (IAPMO).

B. Extend cleanouts to finish floor or wall surface. Lubricate threaded cleanout plugs with non-hardening thread lubricant. Ensure clearance at cleanout for snaking drainage system.

C. Install floor cleanouts at elevation to accommodate finished floor.

D. Route piping in orderly manner and maintain gradient. Route parallel and perpendicular to walls.

E. Install piping penetrating roofed areas to maintain integrity of roof assembly.

F. Sleeve and caulk pipes penetrating exterior walls or interior bearing walls. Provide waterproof installation for exterior walls. Provide UL/FM approved through-penetration firestop system when penetrating fire-rated barriers (i.e. walls, floors, etc.).

G. Test piping system with water in accordance with Section 22 0813, Test Piping Systems.

H. Label piping in accordance with Section 22 0554, Identification of Plumbing, HVAC and Fire Piping and Equipment.

I. Support piping in accordance with Section 22 0529, Hangers and Support for Plumbing Piping and Equipment.

J. Insulate piping in accordance with Section 22 07 19, Plumbing Piping Insulation.

K. Provide splash blocks under downspout nozzle when required to control erosion.

END OF SECTION

22 14 13

22 30 00

PLUMBING EQUIPMENT

PART 1 - GENERAL

1.01 SUMMARY

A. Related Documents:

1. Drawings and general provisions of the Subcontract apply to this Section.

2. Review these documents for coordination with additional requirements and information that apply to work under this Section.

B. Section Includes:

1. Water heaters.

2. Backflow Preventers.

3. Pumps.

C. Related Sections:

1. Division 01 Section "Summary."

2. Division 22 Section “Domestic Water Piping.”

1.02 REFERENCES

A. General:

1. The following documents form part of the Specifications to the extent stated. Where differences exist between codes and standards, the one affording the greatest protection shall apply.

2. Unless otherwise noted, the referenced standard edition is the current one at the time of commencement of the Work.

3. Refer to Division 01 Section "Summary" for the list of applicable regulatory requirements.

4. Refer to Division 22 Section "Common Results for Plumbing" for codes and standards, and other general requirements.

B. American Society of Mechanical Engineers (ASME):

1. ASME Section 8D - Pressure Vessels

C. National Fire Protection Association (NFPA)

1. NFPA 30 Flammable and Combustible Liquids

2. NFPA 31 Installation of Oil Burning Equipment

3. NFPA 54 National Fuel Gas Code

4. NFPA 58 Storage and Handling of Liquefied Petroleum Gases

5. NFPA 70 National Electrical Code

D. Underwriters Laboratories Inc. (UL):

1. UL 795 Commercial gas heating equipment and water heaters.

E. Conform to AGA, NSF, NFPA, and UL requirements for water heaters.

F. Conform to ASME Section 8D for manufacture of pressure vessels for heat exchangers.

G. Conform to ASME Section 8D, NFPA 30, and NFPA 31 for tanks.

1.03 SUBMITTALS

A. Submit under provisions of Division 22 Section "Common Work Results for Plumbing" and Division 01 Section "Submittal Procedures."

B. Submit Shop Drawings and Product Data:

1. Include dimension drawings of water heaters indicating components and connections to other equipment and piping.

2. Include dimensions of tanks, tank lining methods, anchors, attachments, lifting points, tappings, and drains.

3. Indicate pump type, capacity, power requirements, and affected adjacent construction.

C. Submit certified pump curves showing pump-performance characteristics with pump and system operating point plotted. Include NPSH curve when applicable.

D. Submit manufacturer's installation instructions.

E. Submit manufacturer's certificate that pressure vessels meet or exceed UL 1453 requirements.

F. Submit manufacturer's certificate that pumps meet or exceed NSF-61 and NSF-372 requirements.

G. Operation and Maintenance Data: Include operation, maintenance, and inspection data, replacement part numbers and availability, and service depot location and telephone number.

1.04 QUALITY ASSURANCE

A. Provide pumps with manufacturer's name, model number, and rating/capacity identified.

B. ASHRAE/IESNA 90.1-2004 Compliance: Applicable requirements in ASHRAE/IESNA 90.1-2004.

C. Ensure that products and installation of specified products are in conformance with recommendations and requirements of the following organizations:

1. American Gas Association (AGA)

2. National Sanitation Foundation (NSF)

3. American Society of Mechanical Engineers (ASME)

4. National Board of Boiler and Pressure Vessel Inspectors (NBBPVI)

5. National Electrical Manufacturers' Association (NEMA)

6. Underwriters Laboratories (UL)

D. Ensure that pumps operate at specified system fluid temperatures without vapor binding and cavitation, are non-overloading in parallel or individual operation, and operate within 25 percent of midpoint of published maximum efficiency curve.

1.05 DELIVERY, STORAGE, AND HANDLING

A. Deliver to site, store, and protect products.

B. Provide temporary inlet and outlet caps. Maintain caps in place until installation.

1.06 WARRANTY

A. Provide manufacturer's warranty.

B. Warranty: Include coverage of domestic water heaters, in-line circulator, backflow preventers, and grease interceptors.

PART 2 - PRODUCTS

2.01 ACCEPTABLE MANUFACTURERS - WATER HEATERS

A. AOSmith – Basis of design

B. Rheem

C. General Electric (GE)

2.02 COMMERCIAL, POWER-VENT, GAS-FIRED, HGH EFFICIENCY, CONDENSING STORAGE, DOMESTIC-WATER HEATERS:

A. Standard: ANSI Z21.10.3/CSA 4.3.

B. Storage-Tank Construction: ASME-code steel with 150-psig (1035-kPa) working-pressure rating.

1. Tappings: Factory fabricated of materials compatible with tank. Attach tappings to tank before testing.

a. NPS 2 (DN 50) and Smaller: Threaded ends according to ASME B1.20.1.

b. NPS 2-1/2 (DN 65) and Larger: Flanged ends according to ASME B16.5 for steel and stainless-steel flanges and according to ASME B16.24 for copper and copper-alloy flanges.

2. Glass-lined welded steel tank; inspection port, thermally insulated with at least 2 inches (50mm) of glass fiber, encased in corrosion-resistant steel jacket; baked-enamel finish; floor shield and legs.

C. Factory-Installed Storage-Tank Appurtenances:

1. Anode Rod: Replaceable magnesium.

2. Dip Tube: Required unless cold-water inlet is near bottom of tank.

3. Drain Valve: Corrosion-resistant metal complying with ASSE 1005.

4. Insulation: Comply with ASHRAE/IESNA 90.1. Surround entire storage tank except connections and controls.

5. Jacket: Steel with enameled finish.

6. Burner: For use with power-vent, gas-fired, domestic-water heaters and natural-gas fuel.

7. Automatic Ignition: ANSI Z21.20/CSA C22.2 No. 199, electric, automatic, gas-ignition system.

8. Temperature Control: Adjustable thermostat.

9. Safety Controls: Automatic, high-temperature-limit and low-water cutoff devices or systems.

10. Combination Temperature-and-Pressure Relief Valves: ANSI Z21.22/CSA 4.4-M. Include one or more relief valves with total relieving capacity at least as great as heat input, and include pressure setting less than domestic-water heater working-pressure rating. Select one relief valve with sensing element that extends into storage tank.

D. Power-Vent System:

1. Exhaust fan, interlocked with burner.

2. Vent piping material, size and routing per manufacturer recommendations.

2.03 ACCEPTABLE MANUFACTURERS - IN-LINE CIRCULATOR PUMPS

A. Grundfos.

B. ITT Bell & Gossett.

C. TACO.

D. Or Equivalent

2.04 IN-LINE CIRCULATOR PUMPS

A. Manufacturer

1. Watts

2. FEBCO

B. Casing: Bronze, rated for 125 psig (862.5 kPa) working pressure.

C. Impeller: Bronze.

D. Shaft: Alloy steel with integral thrust collar and two oil-lubricated bronze-sleeve bearings.

E. Seal: Carbon rotating against a stationary ceramic seat.

F. Drive: Flexible coupling.

G. Timers: Electric time clock for control of hot-water circulation pump.

2.05 BACKFLOW PREVENTOR

A. The Reduced Pressure Principle Backflow Preventer shall be ASSE® Listed 1013, rated to 180°F and supplied with full port ball valves.

B. The main body shall be Bronze or Nylon 1-1/4". The housing shall be reinforced Nylon and the seat disc elastomers shall be silicone (FDA Approved). The first and second checks shall be accessible for maintenance without removing the device from the line. AFTER HEATER INSTALLATION

C. Install water heaters in accordance with manufacturer’s instructions and to UL requirements.

D. Mount and anchor water heater in accordance with UPC 2012 requirements for Seismic design category C.

E. Coordinate with plumbing piping and related electrical work to achieve operating system.

F. Interlock pump with water heater burner and time delay relay.

2.06 PUMP INSTALLATION

A. Install in accordance with manufacturer's instructions.

B. Provide air cock and drain connection on horizontal pump casings.

C. Provide line-sized gate valve and strainer on suction and line-sized, soft-seated check valve and globe valve on discharge.

D. Decrease from line size with long-radius reducing elbows or reducers. Support piping adjacent to pump such that no weight is carried on pump casings. Provide supports under elbows on pump suction and discharge line sizes 4 inches and over.

E. Ensure that pumps operate at specified system fluid temperatures without vapor binding and cavitation, are nonoverloading in parallel or individual operation, and operate within 25 percent of midpoint of published maximum efficiency curve.

2.07 BACKFLOW PREVENTER INSTALLATION

A. Install backflow preventer in accordance with manufacturer's instructions and to UL requirements.

B. Mount and anchor in accordance with UPC 2012 requirements for Seismic design category C.

C. Install outdoors, contained within an enclosure providing freeze protection, Hot Box HF013039036 or Equivalent.

D. Coordinate with plumbing piping and related electrical work to achieve operating system.

E. Install inside heated and insulated enclosure with access for maintenance.

PART 3 - EXECUTION

3.01 DOMESTIC-WATER HEATER INSTALLATION

A. Commercial, Domestic-Water Heater Mounting: Install commercial domestic-water heaters on concrete base. Comply with requirements for concrete base specified in Section 033000 "Cast-in-Place Concrete."

1. Maintain manufacturer's recommended clearances.

2. Arrange units so controls and devices that require servicing are accessible.

3. Install dowel rods to connect concrete base to concrete floor. Unless otherwise indicated, install dowel rods on 18-inch (450-mm) centers around the full perimeter of concrete base.

4. For supported equipment, install epoxy-coated anchor bolts that extend through concrete base and anchor into structural concrete floor.

5. Place and secure anchorage devices. Use setting drawings, templates, diagrams, instructions, and directions furnished with items to be embedded.

6. Install anchor bolts to elevations required for proper attachment to supported equipment.

7. Anchor domestic-water heaters to substrate.

B. Install gas-fired, domestic-water heaters according to NFPA 54.

1. Install gas shutoff valves on gas supply piping to gas-fired, domestic-water heaters without shutoff valves.

2. Install gas pressure regulators on gas supplies to gas-fired, domestic-water heaters without gas pressure regulators if gas pressure regulators are required to reduce gas pressure at burner.

3. Install automatic gas valves on gas supplies to gas-fired, domestic-water heaters if required for operation of safety control.

4. Comply with requirements for gas shutoff valves, gas pressure regulators, and automatic gas valves.

C. Install commercial domestic-water heaters with seismic-restraint devices.

D. Install combination temperature-and-pressure relief valves in top portion of storage tanks. Use relief valves with sensing elements that extend into tanks. Extend commercial-water-heater relief-valve outlet, with drain piping same as domestic-water piping in continuous downward pitch, and discharge by positive air gap onto closest floor drain.

E. Install thermometer on outlet piping of domestic-water heaters.

F. Install piping-type heat traps on inlet and outlet piping of domestic-water heater storage tanks without integral or fitting-type heat traps.

G. Fill domestic-water heaters with water.

3.02 FIELD QUALITY CONTROL

A. Perform tests and inspections.

1. Manufacturer's Field Service: Engage a factory-authorized service representative to inspect components, assemblies, and equipment installations, including connections, and to assist in testing.

2. Leak Test: After installation, charge system and test for leaks. Repair leaks and retest until no leaks exist.

3. Operational Test: After electrical circuitry has been energized, start units to confirm proper operation.

4. Test and adjust controls and safeties. Replace damaged and malfunctioning controls and equipment.

B. Domestic-water heaters will be considered defective if they do not pass tests and inspections. Comply with requirements in Section 014000 "Quality Requirements" for retesting and reinspecting requirements and Section 017300 "Execution" for requirements for correcting the Work.

C. Prepare test and inspection reports.

3.03 DEMONSTRATION

A. Engage a factory-authorized service representative to train Owner's maintenance personnel to adjust, operate, and maintain domestic-water heaters.

END OF SECTION

22 30 00

22 41 00

PLUMBING FIXTURES

PART 1 - GENERAL

1.01 RELATED DOCUMENTS

A. Drawings and general provisions of the Contract, including General and Supplementary Conditions and Division 01 Specification Sections, apply to this Section.

1.02 SUMMARY

A. Section Includes:

1. Lavatories.
2. Kitchen sinks.
3. Disposers.
4. Water closets.
5. Toilet seats.
6. Urinals.
7. Supply fittings.
8. Waste fittings.

B. Related Requirements:

1. Section 220500 Common Work Results for Plumbing.

1.03 ACTION SUBMITTALS

A. Product Data: For each type of product.

1. Include construction details, material descriptions, dimensions of individual components and pro-files, and finishes for lavatories.
2. Include rated capacities, operating characteristics, electrical characteristics, and furnished specialties and accessories.

B. Shop Drawings: Include diagrams for power, signal, and control wiring.

1.04 INFORMATIONAL SUBMITTALS

A. Coordination Drawings: Counter cutout templates for mounting of counter-mounted plumbing fixtures.

B. Sample Warranty: For special warranty.

1.05 CLOSEOUT SUBMITTALS

A. Operation and Maintenance Data: For plumbing fixtures and faucets to include in emergency, operation, and operation and maintenance manuals.

1. In addition to items specified in Division 01 Section "Operation and Maintenance Data," include the following:

a. Servicing and adjustments of walk-in baths.

1.06 MAINTENANCE MATERIAL SUBMITTALS

A. Furnish extra materials that match products installed and that are packaged with protective covering for storage and identified with labels describing contents.

1. Faucet Washers and O-Rings: Equal to 10 percent of amount of each type and size installed.

2. Faucet Cartridges and O-Rings: Equal to 5 percent of amount of each type and size installed.

3. Tank Repair Kits: Equal to 5 percent of amount of each type installed, but no fewer than 2 of each type.

4. Toilet Seats: Equal to 5 percent of amount of each type installed.

1.07 WARRANTY

A. Special Warranty: Manufacturer agrees to repair or replace components that fail in materials or workmanship within specified warranty period.

1. Failures include, but are not limited to, the following:

a. Structural failures of unit shell.

b. Faulty operation of controls, blowers, pumps, heaters, and timers.

c. Deterioration of metals, metal finishes, and other materials beyond normal use.

2. Warranty Period for Residential Applications of Shells: 5 years from date of Substantial Completion.

3. Warranty Period for Residential Applications of Pumps and Blowers: 5 years from date of Substantial Completion.

4. Warranty Period for Residential Applications of Electronic Controls: 5 years from date of Substantial Completion.

PART 2 - PRODUCTS

2.01 FIXTURE SCHEDULE

A. See schedule on drawings

2.02 WASTE FITTINGS

A. Standard: ASME A112.18.2/CSA B125.2.

B. Drain: Grid type with NPS 1-1/4 (DN 32) offset tailpiece for accessible lavatories.

C. Drain: Pop-up type with NPS 1-1/4 (DN 32) straight tailpiece as part of faucet for standard lavatories.

D. Drain: Grid type with NPS 1-1/2 (DN 40) straight tailpiece for standard kitchen sinks and for laun-dry trays.

E. Trap:

1. Size: NPS 1-1/2 (DN 40) for lavatories.

2. Size: NPS 1-1/2 (DN 40) for kitchen sinks and laundry trays.

3. Material: Chrome-plated, and chrome-plated-brass or -steel wall flange.

4. Material: Stainless-steel, two-piece trap and swivel elbow with 0.012-inch-(0.30-mm-) thick stain-less-steel tube to wall; and stainless-steel wall flange.

5. Material: ASTM F 409 PVC two-piece trap and waste to wall and wall flange.

2.03 GROUT

A. Standard: ASTM C 1107/C 1107M, Grade B, post-hardening and volume-adjusting, dry, hydraulic-cement grout.

B. Characteristics: Nonshrink; recommended for interior and exterior applications.

C. Design Mix: 5000-psi (34.5-MPa), 28-day compressive strength.

D. Packaging: Premixed and factory packaged.

PART 3 - EXECUTION

3.01 EXAMINATION

A. Examine roughing-in of water-supply and sanitary drainage and vent piping systems to verify actual locations of piping connections before plumbing-fixture installation.

B. Examine walls, floors, cabinets, and counters for suitable conditions where fixtures will be in-stalled.

C. Proceed with installation only after unsatisfactory conditions have been corrected.

3.02 INSTALLATION

A. Install plumbing fixtures level and plumb according to roughing-in drawings.

B. Install floor-mounted water closets on closet flange attachments to drainage piping.

C. Install counter-mounting fixtures in and attached to casework.

D. Install pedestal lavatories on pedestals and secured to wood blocking in wall.

E. Install water-supply piping with stop on each supply to each fixture to be connected to water distribution piping. Attach supplies to supports or substrate within pipe spaces behind fixtures. Install stops in locations where they can be easily reached for operation.

1. Exception: Use ball, gate, or globe valves if supply stops are not specified with fixture.

F. Install tanks for accessible, tank-type water closets with lever handle mounted on wide side of compartment.

G. Install toilet seats on water closets.

H. Install faucet flow-control fittings with specified flow rates and patterns in faucet spouts if faucets are not available with required rates and patterns. Include adapters if required.

I. Install shower flow-control fittings with specified maximum flow rates in shower arms.

J. Install traps on fixture outlets.

1. Exception: Omit trap on fixtures with integral traps.

2. Exception: Omit trap on indirect wastes unless otherwise indicated.

K. Install disposer in outlet of each sink indicated to have a disposer. Install switch where indicated or in wall adjacent to sink if location is not indicated.

L. Install dishwasher air-gap fitting at each sink indicated to have air-gap fitting. Install on countertop at sink. Connect inlet hose to dishwasher and outlet hose to disposer.

M. Install hot-water dispensers in back top surface of sink or in countertop with spout over sink.

N. Set bathtubs, baths and shower receptors in leveling bed of cement grout.

O. Install protective shielding pipe covers and enclosures on exposed supplies and waste piping of accessible lavatories and sinks.

P. Install wall flanges or escutcheons at piping wall penetrations in exposed, finished locations. Use deep-pattern escutcheons if required to conceal protruding fittings.

Q. Seal joints between plumbing fixtures, counters, floors, and walls using sanitary-type, one-part, mildew-resistant silicone sealant. Match sealant color to fixture color. Comply with sealant requirements specified in Division 07 Section "Joint Sealants."

3.03 CONNECTIONS

A. Connect fixtures with water supplies, stops, and risers, and with traps, soil, waste, and vent piping. Use size fittings required to match fixtures.

B. Comply with water piping requirements.

C. Install protective shielding pipe covers and enclosures on exposed supplies and waste piping of accessible lavatories and sinks.

3.04 ADJUSTING

A. Operate and adjust plumbing fixtures and controls. Replace damaged and malfunctioning fixtures, fittings, and controls.

B. Adjust water pressure at faucets to produce proper flow.

3.05 CLEANING AND PROTECTION

A. After completing installation of plumbing fixtures, inspect and repair damaged finishes.

B. Clean plumbing fixtures, faucets, and other fittings with manufacturers' recommended cleaning methods and materials.

C. Provide protective covering for installed plumbing fixtures and fittings.

D. Do not allow use of plumbing fixtures for temporary facilities unless approved in writing by Owner.

END OF SECTION

22 41 00

THIS PAGE IS BLANK

23 05 00

COMMON WORK RESULTS FOR HVAC

PART 1 - GENERAL

1.01 SUMMARY

A. This section includes the following:

1. Equipment installation requirements common to equipment sections.

2. Concrete bases.

3. Supports and anchorages.

1.02 DEFINITIONS

A. Finished Spaces: Spaces other than mechanical and electrical equipment rooms, furred spaces, pipe and duct chases, unheated spaces immediately below roof, spaces above ceilings, unexcavated spaces, crawlspaces, and tunnels.

B. Exposed Interior Installations: Exposed to view indoors. Examples include finished occupied spaces and mechanical equipment rooms.

C. Exposed Exterior Installations: Exposed to view outdoors or subject to outdoor ambient temperatures and weather conditions. Examples include rooftop locations.

D. Concealed Interior Installations: Concealed from view and protected from physical contact by building occupants. Examples include above ceilings and chases.

E. Concealed Exterior Installations: Concealed from view and protected from weather conditions by building occupants but subject to outdoor ambient temperatures. Examples include installations within unheated shelters.

1.03 EQUIPMENT INSTALLATION – COMMON REQUIREMENTS

A. Install equipment to allow maximum possible headroom unless specific mounting heights are not indicated.

B. Install equipment level and plumb, parallel and perpendicular to other building systems and components in exposed interior spaces, unless otherwise indicated.

C. Install HVAC equipment to facilitate service, maintenance, and repair or replacement of components. Connect equipment for ease of disconnecting with minimum interference to other installations. Extend grease fittings to accessible locations.

D. Install equipment to allow right of way for piping installed at required slope.

1.04 CONCRETE BASES

A. Concrete Bases: Anchor equipment to concrete base according to equipment manufacturers written instructions and according to seismic codes at project.

1. Construct concrete bases of dimensions indicated, but not less than 12 inches (300 mm) larger in both directions than supported unit.

2. Install dowel rods to connect concrete base to concrete floor. Unless otherwise indicated, install dowel rods on 18 inch (450 mm) centers around the full perimeter of the base.

3. Install epoxy coated anchor bolts for supported equipment that extends through concrete base and anchor into structural concrete floor.

4. Place and secure anchorage devices. Use supported equipment manufacturers setting drawings, templates, diagrams, instructions, and directions furnished with items to be embedded.

5. Install anchor bolts to elevations required for proper attachment to supported equipment.

6. Install anchor bolts according to anchor bolt manufacturer written instructions.

7. Use 3000 psi, 28 day compressive strength concrete and reinforcement as specified in Division 03 Section “Cast in Place Concrete.”

1.05 ERECTION OF METAL SUPPORTS AND ANCHORAGES

A. Refer to Division 05 Section “Metal Fabrications” for structural steel.

B. Cut, fit, and place miscellaneous metal supports accurately in location alignment and elevation to support and anchor HVAC materials and equipment.

C. Field Welding: Comply with AWS D1.1.

1.06 ERECTION OF WOOD SUPPORTS AND ANCHORAGES

A. Cut, fit, and place wood grounds, nailers, blocking, and anchorages to support and anchor HVAC materials and equipment.

B. Select fastener sizes that will not penetrate members if opposite side will be exposed to view or will receive finish materials. Tighten connections between members. Install fasteners without splitting wood members.

C. Attach to substrates as required to support applied loads.

1.07 GROUTING

A. Mix and install grout for HVAC equipment base bearing surfaces, pump and other equipment base plates, and anchors.

B. Clean surfaces that will come into contact with grout.

C. Provide forms as required for placement of grout.

D. Avoid air entrapment during placement of grout.

E. Place grout completely filling equipment bases.

F. Place grout on concrete bases and provide smooth bearing surface for equipment.

G. Place grout and grout anchors

H. Cure placed grout.

PART 2 - PRODUCTS

2.01 MATERIALS

A. All materials used on this project shall be new and CSA approved unless noted otherwise.

PART 3 - EXECUTION

3.01 PAINTING, REPAIRS AND RESTORATION

A. Do painting in accordance with Division 09 Section “Painting.”

B. Prime and touch up marred finished paintwork to match original.

C. Restore to new condition, finishes which have been damaged.

3.02 CLEANING

A. Clean interior and exterior of all systems including strainers. Protect open ends of ducts, diffusers, grilles and registers during construction to prevent ingress of dust and dirt into interior of ducts. If dust or dirt is detected prior to startup, vacuum interior of all ducts and air handling units. Prior to vacuuming use video camera to record condition of ductwork. Also use video camera to record condition of ducts after cleaning.

3.03 PROTECTION

A. Protect equipment and systems openings from dirt, dust, and other foreign materials with materials appropriate to system

END OF SECTION

23 05 00

THIS PAGE IS BLANK

23 05 29

HANGERS AND SUPPORTS

PART 1 - GENERAL

1.01 SUMMARY

A. Section includes:

1. Hangers and supports for mechanical piping, ducting and equipment

B. Unless otherwise indicated, install equipment, ductwork, and piping in accordance with Codes, in accordance with ASHRAE Guidelines and Standards, in accordance with SMACNA Guidelines, and in accordance with the manufacturer/supplier requirements and recommendations.

1.02 REFERENCES

A. American National Standards Institute/ American Society of Mechanical Engineers (ANSI/ASME)

1. ANSI/ASME B31.1, Power Piping.
2. ANSI/ASME B31.9, Building Services Piping.

B. American Society for Testing and Materials (ASTM)

1. ASTM A125, Specification for Steel Springs, Helical, Heat-Treated.
2. ASTM A307, Specification for Carbon Steel Bolts and Studs, 60,000 PSI Tensile Strength.
3. ASTM A563, Specification for Carbon and Alloy Steel Nuts.

C. Manufacturer's Standardization Society of the Valves and Fittings Industry (MSS)

1. MSS SP-58, Pipe Hangers and Supports - Materials, Design and Manufacture.
2. ANSI/MSS SP-69, Pipe Hangers and Supports - Selection and Application.
3. MSS SP-89, Pipe Hangers and Supports - Fabrication and Installation Practices.

1.03 SYSTEM DESCRIPTION

A. Design Requirements

1. Construct pipe hanger and support to manufacturer's recommendations utilizing manufacturer's regular production components, parts and assemblies.
2. Base maximum load ratings on allowable stresses prescribed by MSS SP58 or ASME B31.1.
3. Ensure that supports, guides, anchors do not transmit excessive quantities of heat to building structure.
4. Design hangers and supports to support systems under all conditions of operation, allow free expansion and contraction, prevent excessive stresses from being introduced into pipework or connected equipment.

5. Provide for vertical adjustments after erection and during commissioning. Amount of adjustment to be in accordance with MSS SP58.

B. Performance Requirements

1. Design supports with seismic and wind provisions as required by codes and as described in specification Section 230548.

1.04 QUALITY ASSURANCE

A. Hangers and supports used in fire protection piping systems shall be listed and labeled by Underwriters Laboratories.

B. Steel pipe hangers and supports shall have the manufacturer’s name, part number, and applicable size stamped in the part itself for identification.

C. Hangers and supports shall be designed and manufactured in conformance with MSS SP 58.

1.05 DELIVERY, STORAGE, AND HANDLING

A. Packing, shipping, handling and unloading:

1. Accept materials on site in original factory packaging, labeled with manufacturer's identification.

2. Deliver, store and handle materials in accordance with manufacturer's written instructions.

3. Protect from weather and construction traffic, dirt, water, chemical, and damage, by storing in original packaging.

PART 2 - Products

2.01 GENERAL

A. Fabricate hangers, supports and sway braces in accordance with ANSI B31.1, ANSI B31.9, and MSS SP-58 and SP-89.

B. Use components for intended design purpose only. Do not use for rigging or erection purposes.

2.02 PIPE HANGERS

A. Finishes:

1. Pipe hangers and supports: galvanized painted with zinc-rich paint after manufacture.

2. Use electro-plating galvanizing process or hot dipped galvanizing process.

3. Ensure steel hangers in contact with copper piping are copper plated or epoxy coated.

B. Upper attachment structural: Suspension from lower flange of I-Beam.

1. Cold piping NPS 2 maximum: malleable iron C-clamp with hardened steel cup point setscrew, locknut and carbon steel retaining clip.
   a. Rod: 9 mm UL listed, 13 mm FM approved.

2. Cold piping NPS 2 1/2 or greater, hot piping: Malleable iron beam clamp, eye rod, jaws and extension with carbon steel retaining clip, tie rod, nuts and washers, UL listed, FM approved where required to MSS-SP58 and MSS-SP69.

C. Upper attachment structural: Suspension from upper flange of I-Beam.

1. Cold piping NPS 2 maximum: Ductile iron top-of-beam C-clamp with hardened steel cup point setscrew, locknut and carbon steel retaining clip, UL listed FM approved where required to MSS SP69.

2. Cold piping NPS 2 1/2 or greater, all hot piping: Malleable iron top-of-beam jaw-clamp with hooked rod, spring washer, plain washer and nut UL listed, FM approved where required.

D. Upper attachment to concrete.

1. Ceiling: Carbon steel welded eye rod, clevis plate, clevis pin and cotters with weldless forged steel eye nut. Ensure eye 6 mm minimum greater than rod diameter.

2. Concrete inserts: wedge shaped body with knockout protector plate UL listed FM approved where required to MSS SP-69.

E. Shop and field-fabricated assemblies.

1. Trapeze hanger assemblies: MSS SP-89.

2. Steel brackets: MSS SP-89.

3. Sway braces for seismic restraint systems: to MSS SP-89.

F. Hanger rods: threaded rod material to MSS SP-58.

1. Ensure that hanger rods are subject to tensile loading only.

2. Provide linkages where lateral or axial movement of pipework is anticipated.

3. Do not use 22 mm or 28 mm rod.

G. Pipe attachments: material to MSS SP-58.

1. Attachments for steel piping: carbon steel galvanized.

2. Attachments for copper piping: copper plated black steel.

3. Use insulation saddles for hot pipework.

4. Oversize pipe hangers and supports for insulated pipes.

H. Adjustable clevis: material to MSS SP-69, UL listed FM approved, where required clevis bolt with nipple spacer and vertical adjustment nuts above and below clevis.

1. Ensure "U" has hole in bottom for rivetting to insulation shields.

I. Yoke style pipe roll: carbon steel yoke, rod and nuts with cast iron roll, to MSS SP-69.

J. U-bolts: carbon steel to MSS SP-69 with 2 nuts at each end to ASTM A563.

1. Finishes for steel pipework: galvanized.

2. Finishes for copper, glass, brass or aluminum pipework: black with formed portion plastic coated or epoxy coated.

K. Pipe rollers: cast iron roll and roll stand with carbon steel rod to MSS SP-69.

2.03 RISER CLAMPS

A. Steel or cast-iron pipe: galvanized black carbon steel to MSS SP-58, type 42, UL listed FM approved where required.

B. Copper pipe: carbon steel copper plated to MSS SP-58, type 42.

C. Bolts: to ASTM A307.

D. Nuts: to ASTM A563.

2.04 INSULATION PROTECTION SHIELDS

A. Insulated cold piping:

1. 64 kg/m^3 density insulation plus insulation protection shield to: MSS SP-69, galvanized sheet carbon steel. Length designed for maximum 3 m span.

B. Insulated hot piping:

1. Curved plate 300 mm long, with edges turned up, welded-in centre plate for pipe sizes NPS 12 and over, carbon steel to comply with MSS SP-69.

2.05 CONSTANT SUPPORT SPRING HANGERS

A. Springs: alloy steel to ASTM A125, shot peened, magnetic particle inspected, with +/-5% spring rate tolerance, tested for free height, spring rate, loaded height and provided with Certified Mill Test Report(CMTR).

B. Load adjustability: 10 % minimum adjustability each side of calibrated load. Adjustment without special tools. Adjustments not to affect travel capabilities.

C. Provide upper and lower factory set travel stops.

D. Provide load adjustment scale for field adjustments.

E. Total travel to be actual travel + 20%. Difference between total travel and actual travel 25 mm minimum.

F. Individually calibrated scales on each side of support calibrated prior to shipment, complete with calibration record.

2.06 VARIABLE SUPPORT SPRING HANGERS

A. Vertical movement: 13 mm minimum, 50 mm maximum, use single spring pre-compressed variable spring hangers.

B. Vertical movement greater than 50 mm: use double spring pre-compressed variable spring hanger with 2 springs in series in single casing.

C. Variable spring hanger to be complete with factory calibrated travel stops. Provide certificate of calibration for each hanger.

D. Steel alloy springs: to ASTM A125, shot peened, magnetic particle inspected, with +/-5 % spring rate tolerance, tested for free height, spring rate, loaded height and provided with CMTR.

2.07 EQUIPMENT SUPPORTS

A. Fabricate equipment supports not provided by equipment manufacturer from structural grade steel. Submit calculations with shop drawings.

2.08 EQUIPMENT ANCHOR BOLTS AND TEMPLATES

A. Provide templates to ensure accurate location of anchor bolts.

PART 3 - Execution

3.01 MANUFACTURER’S INSTRUCTIONS

A. Compliance: Comply with manufacturer’s written recommendations or specifications, including product technical bulletins, handling, storage and installation instructions, and datasheet.

3.02 INSTALLATION

A. Install in accordance with:

1. Manufacturer's instructions and recommendations.

B. Clamps on riser piping:

1. Support independent of connected horizontal pipework using riser clamps and riser clamp lugs welded to riser.

2. Bolt-tightening torques to be to industry standards.
3. Steel pipes: Install below coupling or shear lugs welded to pipe.
4. Cast iron pipes: Install below joint.

C. Clevis plates:

1. Attach to concrete with 4 minimum concrete inserts, one at each corner.

D. Provide supplementary structural steelwork where structural bearings do not exist or where concrete inserts are not in correct locations.

E. Use approved constant support type hangers where:

1. vertical movement of pipework is 13 mm or more,
2. transfer of load to adjacent hangers or connected equipment is not permitted.

F. Use variable support spring hangers where:

1. transfer of load to adjacent piping or to connected equipment is not critical.

2. variation in supporting effect does not exceed 25 % of total load.

3.03 HANGER SPACING

A. Gas and fuel oil piping: up to NPS 1/2: every 1.8 m.

B. Copper piping: up to NPS 1/2: every 1.5 m.

C. Hydronic, condensate, rigid, and flexible joint roll groove pipe: in accordance with table below, but not less than one hanger at joints.

Maximum Pipe Size: NPS	Maximum Spacing: Steel	Maximum Spacing: Copper
up to 1-1/4	2.1 m	1.8 m
1-1/2	2.7 m	2.4 m
2	3.0 m	2.7 m
2-1/2	3.6 m	3.0 m
3	3.6 m	3.0 m
3-1/2	3.9 m	3.3 m
4	4.2 m	3.6 m
5	4.8 m	
6	5.1 m	
8	5.7 m	
10	6.6 m	
12	6.9 m	

D. Within 300 mm of each elbow.

E. Pipework greater than NPS 12: to MSS SP69.

3.04 HANGER INSTALLATION

A. Install hanger so that rod is vertical under operating conditions.

B. Adjust hangers to equalize load.

C. Support from structural members. Where structural bearing does not exist or inserts are not in suitable locations, provide supplementary structural steel members, comprised of angel iron or c-channel.

END OF SECTION

23 05 29

THIS PAGE IS BLANK

23 0593

TESTING, ADJUSTING AND BALANCING FOR HVAC

PART 1 - GENERAL

1.1 SUMMARY

A. Section Includes:

1. Balancing Air Systems

B. Provide Test and Balance Contractor services.

C. The project shall be constructed utilizing ASHRAE commissioning Guidelines

1.2 DEFINITIONS

A. AABC: Associated Air Balance Council.

B. NEBB: National Environmental Balancing Bureau.

C. TAB: Testing, adjusting, and balancing.

D. TABB: Testing, Adjusting, and Balancing Bureau.

E. TAB Specialist: An entity engaged to perform TAB Work.

1.3 SUBMITTALS

A. Strategies and Procedures Plan: Within 30 days of Contractor's Notice to Proceed, submit TAB strategies and step-by-step procedures as specified in "Preparation" Article.

B. Certified TAB reports.

1.4 QUALITY ASSURANCE

A. TAB Contractor Qualifications: Engage a TAB entity certified by AABC or NEBB.

1. TAB Field Supervisor: Employee of the TAB contractor and certified by AABC or NEBB.

2. TAB Technician: Employee of the TAB contractor and who is certified by AABC or NEBB as a TAB technician.

B. Certify TAB field data reports and perform the following:

1. Review field data reports to validate accuracy of data and to prepare certified TAB reports.

2. Certify that the TAB team complied with the approved TAB plan and the procedures specified and referenced in this Specification.

C. TAB Report Forms: Use standard TAB contractor's forms approved by Architect and Commissioning Authority.

D. Instrumentation Type, Quantity, Accuracy, and Calibration: As described in ASHRAE 111, Section 5, "Instrumentation.

1.5 RESPONSIBILITIES

A. TAB Contractors*:*

1. Include the cost of commissioning participation in the contract price.

2. Air and water TAB shall be completed with discrepancies and problems remedied before functional testing of the respective air- or water-related systems.

B. TAB Contractor. The duties of the TAB Contractor, in addition to those listed in (A) above, are:

1. Six weeks prior to starting TAB, submit to GC the qualifications of the project TAB technician for approval by Owner.

2. Submit outline of the TAB plan and approach for each system and component to the GC and CC six weeks prior to starting Test and Balance. Plan will be developed after TAB Contractor has familiarity with the control system.

3. Submitted plan shall include:
   a. Copies of all testing and reporting forms to be used for TAB on this project.
   b. Detailed step-by-step procedures for TAB work for each system. List all air flow, water flow, sound level, system capacity and efficiency measurements to be performed and a description of specific test procedures, parameters, formulas to be used.
   c. Identification and types of measurement instruments to be used and their most recent calibration date.
   d. Details regarding specified deferred or seasonal TAB work.
   e. Details of any specified false loading of systems needed to complete TAB work.

4. Maintain running log of events and issues identified by the TAB field technicians. Submit hand-written reports of discrepancies, deficiencies, uncompleted work, contract interpretation requests and lists of completed tests to the GC at least once a week.

5. Communicate in writing to the Controls Contractor all setpoint and parameter changes made or problems and discrepancies identified during TAB which affect the control system setup and operation.

6. Provide a draft TAB report within two weeks of completion. The report should follow the latest and most rigorous reporting recommendations by AABC, NEBB or ASHRAE Standard 111.

7. Provide the Engineer with any requested data gathered but not shown on the draft reports.

8. Provide final TAB report, with details as in the draft.

9. Conduct functional performance tests and checks.

PART 2 - PRODUCTS

2.1 TEST EQUIPMENT

A. Contractor is to provide all tools, equipment and instrumentation required to test relevant systems.

PART 3 - EXECUTION

3.1 EXAMINATION

A. Examine the Contract Documents to become familiar with Project requirements and to discover conditions in systems' designs that may preclude proper TAB of systems and equipment.

B. Examine systems for installed balancing devices, such as test ports, gage cocks, thermometer wells, flow-control devices, balancing valves and fittings, and manual volume dampers. Verify that locations of these balancing devices are accessible.

C. Examine the approved submittals for HVAC systems and equipment.

D. Examine design data including HVAC system descriptions, statements of design assumptions for environmental conditions and systems' output, and statements of philosophies and assumptions about HVAC system and equipment controls.

E. Examine ceiling plenums and underfloor air plenums used for supply, return, or relief air to verify that they meet the leakage class of connected ducts as specified in Division 23 Section "Metal Ducts" and are properly separated from adjacent areas. Verify that penetrations in plenum walls are sealed and fire-stopped if required.

F. Examine equipment performance data including fan and pump curves.

1. Relate performance data to Project conditions and requirements, including system effects that can create undesired or unpredicted conditions that cause reduced capacities in all or part of a system.

2. Calculate system-effect factors to reduce performance ratings of HVAC equipment when installed under conditions different from the conditions used to rate equipment performance. To calculate system effects for air systems, use tables and charts found in AMCA 201, "Fans and Systems," or in SMACNA's "HVAC Systems -Duct Design." Compare results with the design data and installed conditions.

G. Examine system and equipment installations and verify that field quality-control testing, cleaning, and adjusting specified in individual Sections have been performed.

H. Examine test reports specified in individual system and equipment Sections.

I. Examine HVAC equipment and filters and verify that bearings are greased, belts are aligned and tight, and equipment with functioning controls is ready for operation.

J. Examine terminal units, such as variable-air-volume boxes, and verify that they are accessible and their controls are connected and functioning.

K. Examine strainers. Verify that startup screens are replaced by permanent screens with indicated perforations.

L. Examine three-way valves for proper installation for their intended function of diverting or mixing fluid flows.

M. Examine heat-transfer coils for correct piping connections and for clean and straight fins.

N. Examine system pumps to ensure absence of entrained air in the suction piping.

O. Examine operating safety interlocks and controls on HVAC equipment.

P. Report deficiencies discovered before and during performance of TAB procedures. Observe and record system reactions to changes in conditions. Record default set points if different from indicated values.

3.2 PREPARATION

A. Prepare a TAB plan that includes strategies and step-by-step procedures.

B. Complete system-readiness checks and prepare reports. Verify the following:

1. Permanent electrical-power wiring is complete.

2. Hydronic systems are filled, clean, and free of air.

3. Automatic temperature-control systems are operational.

4. Equipment and duct access doors are securely closed.

5. Balance, smoke, and fire dampers are open.

6. Isolating and balancing valves are open and control valves are operational.

7. Ceilings are installed in critical areas where air-pattern adjustments are required and access to balancing devices is provided.

8. Windows and doors can be closed so indicated conditions for system operations can be met.

3.3 GENERAL PROCEDURES FOR TESTING AND BALANCING

A. Perform testing and balancing procedures on each system according to the procedures contained in AABC's "National Standards for Total System Balance" or NEBB's "Procedural Standards for Testing, Adjusting, and Balancing of Environmental Systems" and in this Section.

1. Comply with requirements in ASHRAE 62.1, Section "Air Balancing."

B. Cut insulation, ducts, pipes, and equipment cabinets for installation of test probes to the minimum extent necessary for TAB procedures.

1. After testing and balancing, patch probe holes in ducts with same material and thickness as used to construct ducts.

2. Install and join new insulation that matches removed materials. Restore insulation, coverings, vapor barrier, and finish according to Division 23 Section "HVAC Insulation."

C. Mark equipment and balancing devices, including damper-control positions, valve position indicators, fan-speed-control levers, and similar controls and devices, with paint or other suitable, permanent identification material to show final settings.

D. Take and report testing and balancing measurements in inch-pound (IP) units.

3.4 GENERAL PROCEDURES FOR BALANCING AIR SYSTEMS

A. Prepare test reports for both fans and outlets. Obtain manufacturer's outlet factors and recommended testing procedures. Crosscheck the summation of required outlet volumes with required fan volumes.

B. Prepare schematic diagrams of systems' "as-built" duct layouts.

C. For variable-air-volume systems, develop a plan to simulate diversity.

D. Determine the best locations in main and branch ducts for accurate duct-airflow measurements.

E. Check airflow patterns from the outdoor-air louvers and dampers and the return-and exhaust-air dampers through the supply-fan discharge and mixing dampers.

F. Locate start-stop and disconnect switches, electrical interlocks, and motor starters.

G. Verify that motor starters are equipped with properly sized thermal protection.

H. Check dampers for proper position to achieve desired airflow path.

I. Check for airflow blockages.

J. Check condensate drains for proper connections and functioning.

K. Check for proper sealing of air-handling-unit components.

L. Verify that air duct system is sealed as specified in Division 23 Section "Metal Ducts."

3.5 PROCEDURES FOR CONSTANT-VOLUME AIR SYSTEMS

A. Adjust fans to deliver total indicated airflows within the maximum allowable fan speed listed by fan manufacturer.

1. Measure total airflow.
   a. Where sufficient space in ducts is unavailable for Pitot-tube traverse measurements, measure airflow at terminal outlets and inlets and calculate the total airflow.

2. Measure fan static pressures as follows to determine actual static pressure:
   a. Measure outlet static pressure as far downstream from the fan as practical and upstream from restrictions in ducts such as elbows and transitions.
   b. Measure static pressure directly at the fan outlet or through the flexible connection.
   c. Measure inlet static pressure of single-inlet fans in the inlet duct as near the fan as possible, upstream from the flexible connection, and downstream from duct restrictions.
   d. Measure inlet static pressure of double-inlet fans through the wall of the plenum that houses the fan.

3. Measure static pressure across each component that makes up an air-handling unit, rooftop unit, and other air-handling and -treating equipment.
   a. Report the cleanliness status of filters and the time static pressures are measured.

4. Measure static pressures entering and leaving other devices, such as sound traps, heat-recovery equipment, and air washers, under final balanced conditions.

5. Review Record Documents to determine variations in design static pressures versus actual static pressures. Calculate actual system-effect factors. Recommend adjustments to accommodate actual conditions.

6. Obtain approval from Architect and Commissioning Authority for adjustment of fan speed higher or lower than indicated speed. Comply with requirements in Division 23 Sections for air-handling units for adjustment of fans, belts, and pulley sizes to achieve indicated air-handling-unit performance.

7. Do not make fan-speed adjustments that result in motor overload. Consult equipment manufacturers about fan-speed safety factors. Modulate dampers and measure fan-motor amperage to ensure that no overload will occur. Measure amperage in full-cooling, full-heating, economizer, and any other operating mode to determine the maximum required brake horsepower.

B. Adjust volume dampers for main duct, submain ducts, and major branch ducts to indicated airflows within specified tolerances.

1. Measure airflow of submain and branch ducts.

a. Where sufficient space in submain and branch ducts is unavailable for Pitot-tube traverse measurements, measure airflow at terminal outlets and inlets and calculate the total airflow for that zone.

2. Measure static pressure at a point downstream from the balancing damper, and adjust volume dampers until the proper static pressure is achieved.

3. Remeasure each submain and branch duct after all have been adjusted. Continue to adjust submain and branch ducts to indicated airflows within specified tolerances.

C. Measure air outlets and inlets without making adjustments.

1. Measure terminal outlets using a direct-reading hood or outlet manufacturer's written instructions and calculating factors.

D. Adjust air outlets and inlets for each space to indicated airflows within specified tolerances of indicated values. Make adjustments using branch volume dampers rather than extractors and the dampers at air terminals.

1. Adjust each outlet in same room or space to within specified tolerances of indicated quantities without generating noise levels above the limitations prescribed by the Contract Documents.

2. Adjust patterns of adjustable outlets for proper distribution without drafts.

3.6 PROCEDURES FOR MOTORS

A. Motors, 1/2 HP and Larger: Test at final balanced conditions and record the following data:

1. Manufacturer's name, model number, and serial number.

2. Motor horsepower rating.

3. Motor rpm.

4. Efficiency rating.

5. Nameplate and measured voltage, each phase.

6. Nameplate and measured amperage, each phase.

7. Starter thermal-protection-element rating.

B. Motors Driven by Variable-Frequency Controllers: Test for proper operation at speeds varying from minimum to maximum. Test the manual bypass of the controller to prove proper operation. Record observations including name of controller manufacturer, model number, serial number, and nameplate data.

1. Measure flow through bypass.

3.7 PROCEDURES FOR CONDENSING UNITS

A. Verify proper rotation of fans.

B. Measure entering-and leaving-air temperatures.

C. Record compressor data.

3.8 PROCEDURES FOR HEAT-TRANSFER COILS

A. Measure, adjust, and record the following data for each refrigerant coil:

1. Dry-bulb temperature of entering and leaving air.

2. Wet-bulb temperature of entering and leaving air.

3. Airflow.

4. Air pressure drop.

5. Refrigerant suction pressure and temperature.

3.9 TOLERANCES

A. Set HVAC system's air flow rates and water flow rates within the following tolerances:

1. Supply, Return, and Exhaust Fans and Equipment with Fans: Plus or minus 10 percent

2. Air Outlets and Inlets: Plus or minus 10 percent

3.10 REPORTING

A. Initial Construction-Phase Report: Based on examination of the Contract Documents as specified in "Examination" Article, prepare a report on the adequacy of design for systems' balancing devices. Recommend changes and additions to systems' balancing devices to facilitate proper performance measuring and balancing. Recommend changes and additions to HVAC systems and general construction to allow access for performance measuring and balancing devices.

B. Status Reports: Prepare weekly progress reports to describe completed procedures, procedures in progress, and scheduled procedures. Include a list of deficiencies and problems found in systems being tested and balanced. Prepare a separate report for each system and each building floor for systems serving multiple floors.

3.11 FINAL REPORT

A. General: Prepare a certified written reports tabulate and divide the report into separate sections for tested systems and balanced systems.

1. Include a certification sheet at the front of the report's binder, signed and sealed by the certified testing and balancing engineer.

2. Include a list of instruments used for procedures, along with proof of calibration.

B. Final Report Contents: In addition to certified field-report data, include the following:

1. Pump curves.

2. Fan curves.

3. Manufacturers' test data.

4. Field test reports prepared by system and equipment installers.

5. Other information relative to equipment performances do not include Shop Drawings and product data.

C. General Report Data: In addition to form titles and entries, include the following data:

1. Title page.

2. Name and address of the TAB contractor.

3. Project name.

4. Project location.

5. Architect's name and address.

6. Engineer's name and address.

7. Contractor's name and address.

8. Report date.

9. Signature of TAB supervisor who certifies the report.

10. Table of Contents with the total number of pages defined for each section of the report. Number each page in the report.

11. Summary of contents including the following:

a. Indicated versus final performance.
b. Notable characteristics of systems.
c. Description of system operation sequence if it varies from the Contract Documents.

12. Nomenclature sheets for each item of equipment.

13. Data for terminal units, including manufacturer's name, type, size, and fittings.

14. Notes to explain why certain final data in the body of reports vary from indicated values.

15. Test conditions for fans and pump performance forms including the following:
    a. Settings for outdoor-, return-, and exhaust-air dampers.
    b. Conditions of filters.
    c. Cooling coil, wet-and dry-bulb conditions.
    d. Face and bypass damper settings at coils.
    e. Fan drive settings including settings and percentage of maximum pitch diameter.
    f. Inlet vane settings for variable-air-volume systems.
    g. Settings for supply-air, static-pressure controller.
    h. Other system operating conditions that affect performance.

D. System Diagrams: Include schematic layouts of air and hydronic distribution systems. Present each system with single-line diagram and include the following:

1. Quantities of outdoor, supply, return, and exhaust airflows.

2. Water and steam flow rates.

3. Duct, outlet, and inlet sizes.

4. Pipe and valve sizes and locations.

5. Terminal units.

6. Balancing stations.

7. Position of balancing devices.

3.12 ADDITIONAL TESTS

A. Within 90 days of completing TAB, perform additional TAB to verify that balanced conditions are being maintained throughout and to correct unusual conditions.

B. Seasonal Periods: If initial TAB procedures were not performed during near-peak summer and winter conditions, perform additional TAB during near-peak summer and winter conditions.

END OF SECTION

23 0593

THIS PAGE IS BLANK

23 07 00

HVAC INSULATION

PART 1 - GENERAL

1.1 SUMMARY

A. Section Includes:

1. Insulation Materials:

   a. Cellular Glass
   b. Flexible Elastomeric
   c. Mineral Fiber
   d. Polyolefin
   e. Polystyrene

2. Fire rated insulation systems
3. Insulating cements
4. Adhesives
5. Mastics
6. Sealants
7. Factory-applied jackets
8. Field-applied fabric reinforcing mesh
9. Field-applied jackets
10. Tapes
11. Securements
12. Corner angles

1.2 SUBMITTALS

A. Product Data: For each type of product indicated.

B. Shop Drawings:

1. Detail application of protective shields, saddles, and inserts at hangers for each type of insulation and hanger.

2. Detail attachment and covering of heat tracing inside insulation.

3. Detail insulation application at pipe expansion joints for each type of insulation.

4. Detail insulation application at elbows, fittings, flanges, valves, and specialties for each type of insulation.

5. Detail removable insulation at piping specialties, equipment connections, and access panels.

6. Detail applications of field-applied jackets.

7. Detail application at linkages of control devices.

8. Detail field application for each equipment type.

C. Field quality control reports.

1.3 QUALITY ASSURANCE

A. Fire-Test-Response Characteristics: Insulation and related materials shall have fire-test-response characteristics indicated, as determined by testing identical products per ASTM E 84, by a testing and inspecting agency acceptable to authorities having jurisdiction. Factory label insulation and jacket materials and adhesive, mastic, tapes, and cement material containers, with appropriate markings of applicable testing and inspecting agency.

1. Insulation Installed Indoors: Flame-spread index of 25 or less, and smoke-developed index of 50 or less.

2. Insulation Installed Outdoors: Flame-spread index of 75 or less, and smoke-developed index of 150 or less.

1.4 DELIVERY, STORAGE AND HANDLING

A. Protect products from damage.

B. Dispose of all waste in accordance with Division 1 Section “Construction waste management.”

PART 2 - PRODUCTS

2.1 INSULATION MATERIALS

A. Flexible Fiberglass Ductwork Insulation: ASTM C 553, Type II, Class B-6, 1 lb./cu.ft. with integral foil vapor barrier.

1. R-Value (Installed): 3.0 per inch.

2.2 JACKETING MATERIAL OVER INSULATION

A. PVC Fitting Covers: Factory-fabricated fitting covers manufactured from 20-mil-thick, high-impact, ultra-violet-resistant PVC. Adhesive shall be as recommended by insulation manufacturer.

PART 3 - EXECUTION

3.1 PREPARATION

A. Surface Preparation: Clean and dry surfaces to receive insulation. Remove materials that will adversely affect insulation application.

B. Coordinate insulation installation with the trade installing heat tracing. Comply with requirements for heat tracing that apply to insulation.

C. Mix insulating cements with clean potable water; if insulating cements are to be in contact with stainless-steel surfaces, use demineralized water.

3.2 APPLICATION REQUIREMENTS:

A. Insulate metal ductwork except for the following exceptions:

1. Return and supply ductwork exposed in air-conditioned spaces without ceilings.

2. Return air ductwork in ceiling return plenums, except insulate as required to comply with the Energy Code.

3. HVAC plenums and unit housings pre-insulated at factory.

4. 100 percent exhaust ductwork from space terminal inlet to 5 feet (1.5 m) from building exhaust exit point, or 5 feet (1.5 m) from entrance to unheated space.

5. Exposed HVAC supply and return ductwork extending through air-conditioned spaces.

B. Insulate each ductwork system with flexible fiberglass insulation in thickness and R-value as indicated on Drawings.

C. Insulate exhaust hood duct with fire resistive grease ductwork material. Provide material and installation to meet local and state requirements. Provide clearances as required per manufacturers requirements and local and state requirements.

3.3 INSTALLATION

A. General: Install insulation products in accordance with manufacturer's written instructions, and in accordance with recognized industry practices to ensure that insulation serves its intended purpose.

B. Extend ductwork insulation without interruption through walls, floors and similar ductwork penetrations, except where otherwise indicated.

3.4 PROTECTION AND REPLACEMENT

A. Replace damaged insulation that cannot be repaired satisfactorily, including units with vapor barrier damage and moisture saturated units.

B. Protection: Insulation Installer shall advise Contractor of required protection for insulation work during remainder of construction period, to avoid damage and deterioration.

END OF SECTION

23 07 00

23 1123

FACILITY NATURAL GAS PIPING

PART 1 - GENERAL

1.1 RELATED DOCUMENTS

A. Drawings and general provisions of the Contract, including General and Supplementary Conditions and Division 01 Specification Sections, apply to this Section.

1.2 SUMMARY

A. Section Includes:

1. Pipes, tubes, and fittings.
2. Piping specialties.
3. Piping and tubing joining materials.
4. Valves.
5. Pressure regulators.
6. Service meters.
7. Concrete bases.

1.3 DEFINITIONS

A. Finished Spaces: Spaces other than mechanical and electrical equipment rooms, furred spaces, pipe and duct shafts, unheated spaces immediately below roof, spaces above ceilings, unexcavated spaces, crawlspaces, and tunnels.

B. Exposed, Interior Installations: Exposed to view indoors. Examples include finished occupied spaces and mechanical equipment rooms.

C. Exposed, Exterior Installations: Exposed to view outdoors or subject to outdoor ambient temperatures and weather conditions. Examples include rooftop locations.

1.4 PERFORMANCE REQUIREMENTS

A. Minimum Operating-Pressure Ratings:

1. Piping and Valves: 100 psig (690 kPa).
2. Service Regulators: 65 psig (450 kPa) minimum unless otherwise indicated.

3. Minimum Operating Pressure of Service Meter: 5 psig (34.5 kPa).

B. Natural-Gas System Pressure within Buildings: More than 0.5 psig (3.45 kPa) but not more than 2 psig (13.8 kPa):

1.5 ACTION SUBMITTALS

A. Product Data: For each type of the following:

1. Piping specialties.

2. Corrugated, stainless-steel tubing with associated components.

3. Valves. Include pressure rating, capacity, settings, and electrical connection data of selected models.

4. Pressure regulators. Indicate pressure ratings and capacities.

5. Service meters. Indicate pressure ratings and capacities. Include bypass fittings and meter bars.

6. Dielectric fittings.

B. Shop Drawings: For facility natural-gas piping layout. Include plans, piping layout and elevations, sections, and details for fabrication of pipe anchors, hangers, supports for multiple pipes, alignment guides, expansion joints and loops, and attachments of the same to building structure. Detail location of anchors, alignment guides, and expansion joints and loops.

1. Shop Drawing Scale: 1/4 inch per foot (1:50)

2. Detail mounting, supports, and valve arrangements for service meter assembly and pressure regulator assembly.

C. Delegated-Design Submittal: For natural-gas piping and equipment indicated to comply with performance requirements and design criteria, including analysis data signed and sealed by the qualified professional engineer responsible for their preparation.

1. Detail fabrication and assembly of seismic restraints.

2. Design Calculations: Calculate requirements for selecting seismic restraints.

1.6 INFORMATIONAL SUBMITTALS

A. Coordination Drawings: Plans and details, drawn to scale, on which natural-gas piping is shown and coordinated with other installations, using input from installers of the items involved.

B. Site Survey: Plans, drawn to scale, on which natural-gas piping is shown and coordinated with other services and utilities.

C. Qualification Data: For qualified professional engineer.

D. Welding certificates.

E. Field quality-control reports

1.7 CLOSEOUT SUBMITTALS

A. Operation and Maintenance Data: For motorized gas valves pressure regulators and service meters to include in emergency, operation, and maintenance manuals.

1.8 QUALITY ASSURANCE

A. Steel Support Welding Qualifications: Qualify procedures and personnel according to AWS D1.1/D1.1M, "Structural Welding Code - Steel."

B. Pipe Welding Qualifications: Qualify procedures and operators according to ASME Boiler and Pressure Vessel Code.

C. Electrical Components, Devices, and Accessories: Listed and labeled as defined in NFPA 70, by a qualified testing agency, and marked for intended location and application.

1.9 DELIVERY, STORAGE, AND HANDLING

A. Handling Flammable Liquids: Remove and dispose of liquids from existing natural-gas piping according to requirements of authorities having jurisdiction.

B. Deliver pipes and tubes with factory-applied end caps. Maintain end caps through shipping, storage, and handling to prevent pipe end damage and to prevent entrance of dirt, debris, and moisture.

C. Store and handle pipes and tubes having factory-applied protective coatings to avoid damaging coating, and protect from direct sunlight.

D. Protect stored PE pipes and valves from direct sunlight

1.10 PROJECT CONDITIONS

A. Perform site survey, research public utility records, and verify existing utility locations. Contact utility-locating service for area where Project is located.

B. Interruption of Existing Natural-Gas Service: Do not interrupt natural-gas service to facilities occupied by Owner or others unless permitted under the following conditions and then only after arranging to provide purging and startup of natural-gas supply according to requirements indicated:

1. Notify Architect, Construction Manager, and Owner no fewer than two days in advance of proposed interruption of natural-gas service.

2. Do not proceed with interruption of natural-gas service without Architect, Construction Manager, and Owner written permission

1.11 COORDINATION

A. Coordinate sizes and locations of concrete bases with actual equipment provided.

B. Coordinate requirements for access panels and doors for valves installed concealed behind finished surfaces. Comply with requirements in Division 08 Section "Access Doors and Frames.

PART 2 - PRODUCTS

2.1 PIPES, TUBES, AND FITTINGS

A. Steel Pipe: ASTM A 53/A 53M, black steel, Schedule 40, Type E or S, Grade B.

1. Malleable-Iron Threaded Fittings: ASME B16.3, Class 150, standard pattern.

2. Wrought-Steel Welding Fittings: ASTM A 234/A 234M for butt welding and socket welding.

3. Unions: ASME B16.39, Class 150, malleable iron with brass-to-iron seat, ground joint, and threaded ends.

4. Forged-Steel Flanges and Flanged Fittings: ASME B16.5, minimum Class 150, including bolts, nuts, and gaskets of the following material group, end connections, and facings:

a. Material Group: 1.1.

b. End Connections: Threaded or butt welding to match pipe.

c. Lapped Face: Not permitted underground.

d. Gasket Materials: ASME B16.20, metallic, flat, asbestos free, aluminum o-rings, and spiral-wound metal gaskets.

e. Bolts and Nuts: ASME B18.2.1, carbon steel aboveground and stainless steel underground.

5. Protective Coating for Underground Piping: Factory-applied, three-layer coating of epoxy, adhesive, and PE.

a. Joint Cover Kits: Epoxy paint, adhesive, and heat-shrink PE sleeves.

6. Mechanical Couplings:

a. Manufacturers: Subject to compliance with requirements,:

1. Dresser Piping Specialties; Division of Dresser, Inc.

2. Smith-Blair, Inc.

b. Stainless-steel or Steel flanges and tube with epoxy finish.

c. Buna-nitrile seals.

d. Stainless-steel or Steel bolts, washers, and nuts.

e. Coupling shall be capable of joining PE pipe to PE pipe, steel pipe to PE pipe, or steel pipe to steel pipe.

f. Steel body couplings installed underground on plastic pipe shall be factory equipped with anode.

B. Corrugated, Stainless-Steel Tubing: Comply with ANSI/IAS LC 1.

1. Manufacturers: Subject to compliance with requirements,
   a. OmegaFlex, Inc.
   b. Parker Hannifin Corporation; Parflex Division.
   c. Titeflex.
   d. Tru-Flex Metal Hose Corp.

2. Tubing: ASTM A 240/A 240M, corrugated, Series 300 stainless steel.

3. Coating: PE with flame retardant.
   a. Surface-Burning Characteristics: As determined by testing identical products according to ASTM E 84 by a qualified testing agency. Identify products with appropriate markings of applicable testing agency.
      1. Flame-Spread Index: 25 or less.
      2. Smoke-Developed Index: 50 or less.

4. Fittings: Copper-alloy mechanical fittings with ends made to fit and listed for use with corrugated stainless-steel tubing and capable of metal-to-metal seal without gaskets. Include brazing socket or threaded ends complying with ASME B1.20.1.

5. Striker Plates: Steel, designed to protect tubing from penetrations.

6. Manifolds: Malleable iron or steel with factory-applied protective coating. Threaded connections shall comply with ASME B1.20.1 for pipe inlet and corrugated tubing outlets.

7. Operating-Pressure Rating: 5 psig (34.5 kPa).

2.2 PIPING SPECIALTIES

A. Appliance Flexible Connectors:

1. Indoor, Fixed-Appliance Flexible Connectors: Comply with ANSI Z21.24.

2. Indoor, Movable-Appliance Flexible Connectors: Comply with ANSI Z21.69.

3. Outdoor, Appliance Flexible Connectors: Comply with ANSI Z21.75.

4. Corrugated stainless-steel tubing with polymer coating.

5. Operating-Pressure Rating: 0.5 psig (3.45 kPa).

6. End Fittings: Zinc-coated steel.

7. Threaded Ends: Comply with ASME B1.20.1.

8. Maximum Length: 72 inches (1830 mm).

2.3 JOINING MATERIALS

A. Joint Compound and Tape: Suitable for natural gas.

B. Welding Filler Metals: Comply with AWS D10.12/D10.12M for welding materials appropriate for wall thickness and chemical analysis of steel pipe being welded.

C. Brazing Filler Metals: Alloy with melting point greater than 1000 deg F (540 deg C) complying with AWS A5.8/A5.8M. Brazing alloys containing more than 0.05 percent phosphorus are prohibited.

2.4 MANUAL GAS SHUTOFF VALVES

A. See "Underground Manual Gas Shutoff Valve Schedule" and "Aboveground Manual Gas Shutoff Valve Schedule" Articles for where each valve type is applied in various services.

B. General Requirements for Metallic Valves, NPS 2 (DN 50) and Smaller: Comply with ASME B16.33.

1. CWP Rating: [125 psig (862 kPa)]

2. Threaded Ends: Comply with ASME B1.20.1.

3. Dryseal Threads on Flare Ends: Comply with ASME B1.20.3.

4. Tamperproof Feature: Locking feature for valves indicated in "Underground Manual Gas Shutoff Valve Schedule" and "Aboveground Manual Gas Shutoff Valve Schedule" Articles.

5. Listing: Listed and labeled by an NRTL acceptable to authorities having jurisdiction for valves 1 inch (25 mm) and smaller.

6. Service Mark: Valves 1-1/4 inches (32 mm) to NPS 2 (DN 50) shall have initials "WOG" permanently marked on valve body.

C. General Requirements for Metallic Valves, NPS 2-1/2 (DN 65) and Larger: Comply with ASME B16.38.

1. CWP Rating: [125 psig (862 kPa)] .

2. Flanged Ends: Comply with ASME B16.5 for steel flanges.

3. Tamperproof Feature: Locking feature for valves indicated in "Underground Manual Gas Shutoff Valve Schedule" and "Aboveground Manual Gas Shutoff Valve Schedule" Articles.

4. Service Mark: Initials "WOG" shall be permanently marked on valve body.

D. One-Piece, Bronze Ball Valve with Bronze Trim: MSS SP-110.

1. Manufacturers: Subject to compliance with requirements,
   a. BrassCraft Manufacturing Company; a Masco company.
   b. Conbraco Industries, Inc.; Apollo Div.
   c. Lyall, R. W. & Company, Inc.
   d. McDonald, A. Y. Mfg. Co.
   e. Perfection Corporation; a subsidiary of American Meter Company.

2. Body: Bronze, complying with ASTM B 584.

3. Ball: Chrome-plated brass.

4. Stem: Bronze; blowout proof.

5. Seats: Reinforced TFE; blowout proof.

6. Packing: Separate packnut with adjustable-stem packing threaded ends.

7. Ends: Threaded, flared, or socket as indicated in "Underground Manual Gas Shutoff Valve Schedule" and "Aboveground Manual Gas Shutoff Valve Schedule" Articles.

8. CWP Rating: 600 psig (4140 kPa).

9. Listing: Valves NPS 1 (DN 25) and smaller shall be listed and labeled by an NRTL acceptable to authorities having jurisdiction.

10. Service: Suitable for natural-gas service with "WOG" indicated on valve body.

2.5 PRESSURE REGULATORS

A. General Requirements

1. Single stage and suitable for natural gas.

2. Steel jacket and corrosion-resistant components.

3. Elevation compensator.

4. End Connections: Threaded for regulators NPS 2 (DN 50) and smaller; flanged for regulators NPS 2-1/2 (DN 65) and larger.

B. Service Pressure Regulators: Comply with ANSI Z21.80.

1. Manufacturers: Subject to compliance with requirements,:
   a. Actaris.
   b. American Meter Company.
   c. Fisher Control Valves and Regulators; Division of Emerson Process Management.
   d. Invensys.
   e. Richards Industries; Jordan Valve Div.

2. Body and Diaphragm Case: Cast iron or die-cast aluminum.

3. Springs: Zinc-plated steel; interchangeable.

4. Diaphragm Plate: Zinc-plated steel.

5. Seat Disc: Nitrile rubber resistant to gas impurities, abrasion, and deformation at the valve port.

6. Orifice: Aluminum; interchangeable.

7. Seal Plug: Ultraviolet-stabilized, mineral-filled nylon.

8. Single-port, self-contained regulator with orifice no larger than required at maximum pressure inlet, and no pressure sensing piping external to the regulator.

9. Pressure regulator shall maintain discharge pressure setting downstream, and not exceed 150 percent of design discharge pressure at shutoff.

10. Overpressure Protection Device: Factory mounted on pressure regulator.

11. Atmospheric Vent: Factory- or field-installed, stainless-steel screen in opening if not connected to vent piping.

12. Maximum Inlet Pressure: [100 psig (690 kPa)].

C. Line Pressure Regulators: Comply with ANSI Z21.80.

1. Manufacturers: Subject to compliance with requirements,:
   a. Actaris.
   b. American Meter Company.
   c. Eclipse Combustion, Inc.
   d. Fisher Control Valves and Regulators; Division of Emerson Process Management.
   e. Invensys.
   f. Maxitrol Company.
   g. Richards Industries; Jordan Valve Div.

2. Body and Diaphragm Case: Cast iron or die-cast aluminum.

3. Springs: Zinc-plated steel; interchangeable.

4. Diaphragm Plate: Zinc-plated steel.

5. Seat Disc: Nitrile rubber resistant to gas impurities, abrasion, and deformation at the valve port.

6. Orifice: Aluminum; interchangeable.

7. Seal Plug: Ultraviolet-stabilized, mineral-filled nylon.

8. Single-port, self-contained regulator with orifice no larger than required at maximum pressure inlet, and no pressure sensing piping external to the regulator.

9. Pressure regulator shall maintain discharge pressure setting downstream, and not exceed 150 percent of design discharge pressure at shutoff.

10. Overpressure Protection Device: Factory mounted on pressure regulator.

11. Atmospheric Vent: Factory- or field-installed, stainless-steel screen in opening if not connected to vent piping.

12. Maximum Inlet Pressure: 2 psig (13.8 kPa)

2.6 SERVICE METERS

A. Diaphragm-Type Service Meters: Comply with ANSI B109.1 or ANSI B109.2].

1. Manufacturers: Subject to compliance with requirements,
   a. Actaris.
   b. American Meter Company.
   c. Invensys.

2. Case: Die-cast aluminum.

3. Connections: Steel threads.

4. Diaphragm: Synthetic fabric.

5. Diaphragm Support Bearings: Self-lubricating.

6. Compensation: Continuous temperature and pressure.

7. Meter Index: Cubic feet.

8. Meter Case and Index: Tamper resistant.

9. Remote meter reader compatible.

10. Maximum Inlet Pressure: 100 psig (690 kPa)

11. Pressure Loss: Maximum 0.5-inch wg (124 Pa).

12. Accuracy: Maximum plus or minus 1.0.

2.7 DIELECTRIC FITTINGS

A. General Requirements: Assembly of copper alloy and ferrous materials with separating nonconductive insulating material. Include end connections compatible with pipes to be joined.

B. Dielectric Unions:

1. Manufacturers: Subject to compliance with requirements,:
   a. Capitol Manufacturing Company.
   b. Central Plastics Company.
   c. Hart Industries International, Inc.
   d. Jomar International Ltd.
   e. Matco-Norca, Inc.
   f. McDonald, A. Y. Mfg. Co.
   g. Watts Regulator Co.; a division of Watts Water Technologies, Inc.
   h. Wilkins; a Zurn company.

2. Description:
   a. Standard: ASSE 1079.
   b. Pressure Rating: 125 psig (860 kPa) minimum at 180 deg F (82 deg C)
   c. End Connections: Solder-joint copper alloy and threaded ferrous.

C. Dielectric Flanges:

1. Manufacturers: Subject to compliance with requirements,:
   a. Capitol Manufacturing Company.
   b. Central Plastics Company.
   c. Matco-Norca, Inc.
   d. Watts Regulator Co.; a division of Watts Water Technologies, Inc.
   e. Wilkins; a Zurn company.

2. Description:
   a. Standard: ASSE 1079.
   b. Factory-fabricated, bolted, companion-flange assembly.
   c. Pressure Rating: 125 psig (860 kPa) minimum at 180 deg F (82 deg C.
   d. End Connections: Solder-joint copper alloy and threaded ferrous; threaded solder- joint copper alloy and threaded ferrous.

D. Dielectric-Flange Insulating Kits:

1. Manufacturers: Subject to compliance with requirements,

a. Calpico, Inc.
b. Central Plastics Company.
c. Pipeline Seal and Insulator, Inc.

2. Description:
a. Nonconducting materials for field assembly of companion flanges.
b. Pressure Rating: 150 psig (1035 kPa)
c. Gasket: Neoprene or phenolic.
d. Bolt Sleeves: Phenolic or polyethylene.
e. Washers: Phenolic with steel backing washers.

2.8 LABELING AND IDENTIFYING

A. Detectable Warning Tape: Acid- and alkali-resistant, PE film warning tape manufactured for marking and identifying underground utilities, a minimum of 6 inches (150 mm) wide and 4 mils (0.1 mm) thick, continuously inscribed with a description of utility, with metallic core encased in a protective jacket for corrosion protection, detectable by metal detector when tape is buried up to 30 inches (750 mm) deep; colored yellow.

PART 3 - EXECUTION

3.1 EXAMINATION

A. Examine roughing-in for natural-gas piping system to verify actual locations of piping connections before equipment installation.

B. Proceed with installation only after unsatisfactory conditions have been corrected.

3.2 PREPARATION

A. Close equipment shutoff valves before turning off natural gas to premises or piping section.

B. Inspect natural-gas piping according to NFPA 54 the International Fuel Gas Code to determine that natural-gas utilization devices are turned off in piping section affected.

C. Comply with NFPA 54 the International Fuel Gas Code requirements for prevention of accidental ignition.

3.3 OUTDOOR PIPING INSTALLATION

A. Comply with NFPA 54 the International Fuel Gas Code for installation and purging of natural- gas piping.

B. Install underground, natural-gas piping buried at least 36 inches (900 mm) below finished grade. Comply with requirements in Division 31 Section "Earth Moving" for excavating, trenching, and backfilling.

1. If natural-gas piping is installed less than 36 inches (900 mm) below finished grade, install it in containment conduit.

C. Install underground, PE, natural-gas piping according to ASTM D 2774.

D. Steel Piping with Protective Coating:

1. Apply joint cover kits to pipe after joining to cover, seal, and protect joints.

2. Repair damage to PE coating on pipe as recommended in writing by protective coating manufacturer.

3. Replace pipe having damaged PE coating with new pipe.

E. Copper Tubing with Protective Coating:

1. Apply joint cover kits over tubing to cover, seal, and protect joints.

2. Repair damage to PE coating on pipe as recommended in writing by protective coating manufacturer.

F. Install fittings for changes in direction and branch connections.

G. Install pressure gage upstream and downstream from each service regulator. Pressure gages are specified in Division 23 Section "Meters and Gages for HVAC Piping."

3.4 INDOOR PIPING INSTALLATION

A. Comply with NFPA 54 the International Fuel Gas Code for installation and purging of natural- gas piping.

B. Drawing plans, schematics, and diagrams indicate general location and arrangement of piping systems. Indicated locations and arrangements are used to size pipe and calculate friction loss, expansion, and other design considerations. Install piping as indicated unless deviations to layout are approved on Coordination Drawings.

C. Arrange for pipe spaces, chases, slots, sleeves, and openings in building structure during progress of construction, to allow for mechanical installations.

D. Install piping in concealed locations unless otherwise indicated and except in equipment rooms and service areas.

E. Install piping indicated to be exposed and piping in equipment rooms and service areas at right angles or parallel to building walls. Diagonal runs are prohibited unless specifically indicated otherwise.

F. Install piping above accessible ceilings to allow sufficient space for ceiling panel removal.

G. Locate valves for easy access.

H. Install natural-gas piping at uniform grade of 2 percent down toward drip and sediment traps.

I. Install piping free of sags and bends.

J. Install fittings for changes in direction and branch connections.

K. Verify final equipment locations for roughing-in.

L. Comply with requirements in Sections specifying gas-fired appliances and equipment for roughing-in requirements.

M. Drips and Sediment Traps: Install drips at points where condensate may collect, including service-meter outlets. Locate where accessible to permit cleaning and emptying. Do not install where condensate is subject to freezing.

1. Construct drips and sediment traps using tee fitting with bottom outlet plugged or capped. Use nipple a minimum length of 3 pipe diameters, but not less than 3 inches (75 mm) long and same size as connected pipe. Install with space below bottom of drip to remove plug or cap.

N. Extend relief vent connections for service regulators, line regulators, and overpressure protection devices to outdoors and terminate with weatherproof vent cap.

O. Conceal pipe installations in walls, pipe spaces, utility spaces, above ceilings, below grade or floors, and in floor channels unless indicated to be exposed to view.

P. Concealed Location Installations: Except as specified below, install concealed natural-gas piping and piping installed under the building in containment conduit constructed of steel pipe with welded joints as described in Part 2. Install a vent pipe from containment conduit to outdoors and terminate with weatherproof vent cap.

1. Above Accessible Ceilings: Natural-gas piping, fittings, valves, and regulators may be installed in accessible spaces without containment conduit.

2. In Floors: Install natural-gas piping with welded or brazed joints and protective coating in cast-in-place concrete floors. Cover piping to be cast in concrete slabs with minimum of 1-1/2 inches (38 mm) of concrete. Piping may not be in physical contact with other metallic structures such as reinforcing rods or electrically neutral conductors. Do not embed piping in concrete slabs containing quick-set additives or cinder aggregate.

3. In Floor Channels: Install natural-gas piping in floor channels. Channels must have cover and be open to space above cover for ventilation.

4. In Walls or Partitions: Protect tubing installed inside partitions or hollow walls from physical damage using steel striker barriers at rigid supports.
   a. Exception: Tubing passing through partitions or walls does not require striker barriers.

5. Prohibited Locations:
   a. Do not install natural-gas piping in or through circulating air ducts, clothes or trash chutes, chimneys or gas vents (flues), ventilating ducts, or dumbwaiter or elevator shafts.
   b. Do not install natural-gas piping in solid walls or partitions.

Q. Use eccentric reducer fittings to make reductions in pipe sizes. Install fittings with level side down.

R. Connect branch piping from top or side of horizontal piping.

S. Install unions in pipes NPS 2 (DN 50) and smaller, adjacent to each valve, at final connection to each piece of equipment. Unions are not required at flanged connections.

T. Do not use natural-gas piping as grounding electrode.

U. Install strainer on inlet of each line-pressure regulator and automatic or electrically operated valve.

V. Install pressure gage upstream and downstream from each line regulator. Pressure gages are specified in Division 23 Section "Meters and Gages for HVAC Piping."

W. Install sleeves for piping penetrations of walls, ceilings, and floors. Comply with requirements for sleeves specified in Division 23 Section "Sleeves and Sleeve Seals for HVAC Piping."

X. Install sleeve seals for piping penetrations of concrete walls and slabs. Comply with requirements for sleeve seals specified in Division 23 Section "Sleeves and Sleeve Seals for HVAC Piping."

Y. Install escutcheons for piping penetrations of walls, ceilings, and floors. Comply with requirements for escutcheons specified in Division 23 Section "Escutcheons for HVAC Piping."

3.5 SERVICE-METER ASSEMBLY INSTALLATION

A. Install service-meter assemblies aboveground.

B. Install metal shutoff valves upstream from service regulators. Shutoff valves are not required at second regulators if two regulators are installed in series.

C. Install strainer on inlet of service-pressure regulator and meter set.

D. Install service regulators mounted outside with vent outlet horizontal or facing down. Install screen in vent outlet if not integral with service regulator.

E. Install metal shutoff valves upstream from service meters. Install dielectric fittings downstream from service meters.

F. Install service meters downstream from pressure regulators.

G. Install metal bollards to protect meter assemblies. Comply with requirements in Division 05 Section "Metal Fabrications" for pipe bollards.

3.6 VALVE INSTALLATION

A. Install manual gas shutoff valve for each gas appliance ahead of corrugated stainless-steel tubing, aluminum, or copper connector.

B. Install underground valves with valve boxes.

C. Install regulators and overpressure protection devices with maintenance access space adequate for servicing and testing.

D. Install earthquake valves aboveground outside buildings according to listing.

E. Install anode for metallic valves in underground PE piping.

3.7 PIPING JOINT CONSTRUCTION

A. Ream ends of pipes and tubes and remove burrs.

B. Remove scale, slag, dirt, and debris from inside and outside of pipe and fittings before assembly.

C. Threaded Joints:

1. Thread pipe with tapered pipe threads complying with ASME B1.20.1.

2. Cut threads full and clean using sharp dies.

3. Ream threaded pipe ends to remove burrs and restore full inside diameter of pipe.

4. Apply appropriate tape or thread compound to external pipe threads unless dryseal threading is specified.

5. Damaged Threads: Do not use pipe or pipe fittings with threads that are corroded or damaged. Do not use pipe sections that have cracked or open welds.

D. Welded Joints:

1. Construct joints according to AWS D10.12/D10.12M, using qualified processes and welding operators.

2. Bevel plain ends of steel pipe.

3. Patch factory-applied protective coating as recommended by manufacturer at field welds and where damage to coating occurs during construction.

E. Brazed Joints: Construct joints according to AWS's "Brazing Handbook," "Pipe and Tube" Chapter.

F. Flanged Joints: Install gasket material, size, type, and thickness appropriate for natural-gas service. Install gasket concentrically positioned.

G. Flared Joints: Cut tubing with roll cutting tool. Flare tube end with tool to result in flare dimensions complying with SAE J513. Tighten finger tight, then use wrench. Do not over tighten.

H. PE Piping Heat-Fusion Joints: Clean and dry joining surfaces by wiping with clean cloth or paper towels. Join according to ASTM D 2657.

1. Plain-End Pipe and Fittings: Use butt fusion.

2. Plain-End Pipe and Socket Fittings: Use socket fusion.

3.8 HANGER AND SUPPORT INSTALLATION

A. Install seismic restraints on piping. Comply with requirements for seismic-restraint devices specified in Division 23 Section "Vibration and Seismic Controls for HVAC Piping and Equipment."

B. Comply with requirements for pipe hangers and supports specified in Division 23 Section "Hangers and Supports for HVAC Piping and Equipment."

C. Install hangers for horizontal steel piping with the following maximum spacing and minimum rod sizes:

1. NPS 1 (DN 25) and Smaller: Maximum span, 96 inches (2438 mm); minimum rod size, 3/8 inch (10 mm).

2. NPS 1-1/4 (DN 32): Maximum span, 108 inches (2743 mm); minimum rod size, 3/8 inch (10 mm).

3. NPS 1-1/2 and NPS 2 (DN 40 and DN 50): Maximum span, 108 inches (2743 mm); minimum rod size, 3/8 inch (10 mm).

4. NPS 2-1/2 to NPS 3-1/2 (DN 65 to DN 90): Maximum span, 10 feet (3 m); minimum rod size, 1/2 inch (13 mm).

5. NPS 4 (DN 100) and Larger: Maximum span, 10 feet (3 m); minimum rod size, 5/8 inch (15.8 mm).

D. Install hangers for horizontal drawn-temper copper tubing with the following maximum spacing and minimum rod sizes:

1. NPS 3/8 (DN 10): Maximum span, 48 inches (1220 mm); minimum rod size, 3/8 inch (10 mm).

2. NPS 1/2 and NPS 5/8 (DN 15 and DN 18): Maximum span, 72 inches (1830 mm); minimum rod size, 3/8 inch (10 mm).

3. NPS 3/4 and NPS 7/8 (DN 20 and DN 22): Maximum span, 84 inches (2134 mm); minimum rod size, 3/8 inch (10 mm).

4. NPS 1 (DN 25): Maximum span, 96 inches (2440 mm); minimum rod size, 3/8 inch (10 mm).

E. Install hangers for horizontal, corrugated stainless-steel tubing with the following maximum spacing and minimum rod sizes:

1. NPS 3/8 (DN 10): Maximum span, 48 inches (1220 mm); minimum rod size, 3/8 inch (10 mm).

2. NPS 1/2 (DN 15): Maximum span, 72 inches (1830 mm); minimum rod size, 3/8 inch (10 mm).

3. NPS 3/4 (DN 20) and Larger: Maximum span, 96 inches (2440 mm); minimum rod size, 3/8 inch (10 mm).

3.9 CONNECTIONS

A. Connect to utility's gas main according to utility's procedures and requirements.

B. Install natural-gas piping electrically continuous, and bonded to gas appliance equipment grounding conductor of the circuit powering the appliance according to NFPA 70.

C. Install piping adjacent to appliances to allow service and maintenance of appliances.

D. Connect piping to appliances using manual gas shutoff valves and unions. Install valve within 72 inches (1800 mm) of each gas-fired appliance and equipment. Install union between valve and appliances or equipment.

E. Sediment Traps: Install tee fitting with capped nipple in bottom to form drip, as close as practical to inlet of each appliance.

3.10 LABELING AND IDENTIFYING

A. Comply with requirements in Division 23 Section "Identification for HVAC Piping and Equipment" for piping and valve identification.

B. Install detectable warning tape directly above gas piping, 12 inches (300 mm) below finished grade, except 6 inches (150 mm) below subgrade under pavements and slabs.

3.11 PAINTING

A. Comply with requirements in Division 09 painting Sections for painting interior and exterior natural-gas piping.

B. Paint exposed, exterior metal piping, valves, service regulators, service meters and meter bars, earthquake valves, and piping specialties, except components, with factory-applied paint or protective coating.

1. Alkyd System: MPI EXT 5.1D.
   a. Prime Coat: Alkyd anticorrosive metal primer.
   b. Intermediate Coat: Exterior alkyd enamel matching topcoat.
   c. Topcoat: Exterior alkyd enamel flat.
   d. Color: Gray.

C. Paint exposed, interior metal piping, valves, service regulators, service meters and meter bars, earthquake valves, and piping specialties, except components, with factory-applied paint or protective coating.

1. Latex Over Alkyd Primer System: MPI INT 5.1Q.
   a. Prime Coat: Alkyd anticorrosive metal primer.
   b. Intermediate Coat: Interior latex matching topcoat.
   c. Topcoat: Interior latex flat.
   d. Color: Gray.

2. Alkyd System: MPI INT 5.1E.
   a. Prime Coat: Alkyd anticorrosive metal primer.
   b. Intermediate Coat: Interior alkyd matching topcoat.
   c. Topcoat: Interior alkyd flat.
   d. Color: Gray.

D. Damage and Touchup: Repair marred and damaged factory-applied finishes with materials and by procedures to match original factory finish.

3.12 FIELD QUALITY CONTROL

A. Perform tests and inspections.

B. Tests and Inspections:

1. Test, inspect, and purge natural gas according to NFPA 54 the International Fuel Gas Code and authorities having jurisdiction.

C. Natural-gas piping will be considered defective if it does not pass tests and inspections.

D. Prepare test and inspection reports.

3.13 DEMONSTRATION

A. Engage a factory-authorized service representative to train Owner's maintenance personnel to adjust, operate, and maintain earthquake valves.

3.14 OUTDOOR PIPING SCHEDULE

A. Underground natural-gas piping shall be one of the following:

1. PE pipe and fittings joined by heat fusion, or mechanical couplings; service-line risers with tracer wire terminated in an accessible location.

2. Steel pipe with wrought-steel fittings and welded joints, or mechanical couplings. Coat pipe and fittings with protective coating for steel piping.

3. Annealed-temper copper tube with wrought-copper fittings and brazed joints. Coat pipe and fittings with protective coating for copper tubing.

B. Aboveground natural-gas piping shall be one of the following:

1. Steel pipe with malleable-iron fittings and threaded joints.

2. Steel pipe with wrought-steel fittings and welded joints.

3. Annealed-temper copper tube with wrought-copper fittings and brazed joints.

C. Branch Piping in Cast-in-Place Concrete to Single Appliance: Annealed-temper copper tube with wrought-copper fittings and flared joints. Install piping embedded in concrete with no joints in concrete.

D. Containment Conduit: Steel pipe with wrought-steel fittings and welded joints. Coat pipe and fittings with protective coating for steel piping.

3.15 INDOOR PIPING SCHEDULE FOR SYSTEM PRESSURES LESS THAN 0.5 PSIG (3.45 KPA)

A. Aboveground, branch piping NPS 1 (DN 25) and smaller shall be one of the following:

1. Corrugated stainless-steel tubing with mechanical fittings having socket or threaded ends to match adjacent piping.

2. Annealed-temper, tin-lined copper tube with flared joints and fittings.

3. Annealed-temper, copper tube with wrought-copper fittings and flared joints.

4. Aluminum tube with flared fittings and joints.

5. Steel pipe with malleable-iron fittings and threaded joints.

B. Aboveground, distribution piping shall be the following:

1. Steel pipe with malleable-iron fittings and threaded joints.

2. Steel pipe with wrought-steel fittings and welded joints.

C. Underground, below building, piping shall be the following:

1. Steel pipe with malleable-iron fittings and threaded joints.

2. Steel pipe with wrought-steel fittings and welded joints.

D. Containment Conduit: Steel pipe with wrought-steel fittings and welded joints. Coat pipe and fittings with protective coating for steel piping.

E. Containment Conduit Vent Piping: Steel pipe with malleable-iron fittings and threaded or wrought-steel fittings with welded joints. Coat underground pipe and fittings with protective coating for steel piping.

3.16 INDOOR PIPING SCHEDULE FOR SYSTEM PRESSURES MORE THAN 0.5 PSIG (3.45 KPA) AND LESS THAN 5 PSIG (34.5 KPA)

A. Aboveground, branch piping NPS 1 (DN 25) and smaller shall be one of the following:

1. Corrugated stainless-steel tubing with mechanical fittings having socket or threaded ends to match adjacent piping.

2. Annealed-temper, tin-lined copper tube with flared joints and fittings.

3. Annealed-temper, copper tube with wrought-copper fittings and flared joints.

4. Aluminum tube with flared fittings and joints.

5. Steel pipe with malleable-iron fittings and threaded joints.

B. Aboveground, distribution piping shall be one of the following:

1. Steel pipe with malleable-iron fittings and threaded joints.

2. Steel pipe with steel welding fittings and welded joints.

C. Underground, below building, piping shall be one of the following:

1. Steel pipe with malleable-iron fittings and threaded joints.

2. Steel pipe with wrought-steel fittings and welded joints.

D. Containment Conduit: Steel pipe with wrought-steel fittings and welded joints.

1. Coat underground pipe and fittings with protective coating for steel piping.

E. Containment Conduit Vent Piping: Steel pipe with malleable-iron fittings and threaded or wrought-steel fittings with welded joints. Coat underground pipe and fittings with protective coating for steel piping.

3.17 UNDERGROUND MANUAL GAS SHUTOFF VALVE SCHEDULE

A. Connections to Existing Gas Piping: Use valve and fitting assemblies made for tapping utility's gas mains and listed by an NRTL.

B. Underground:

1. PE valves.

2. NPS 2 (DN 50) and Smaller: Bronze plug valves.

3. NPS 2-1/2 (DN 65) and Larger: Cast-iron, lubricated plug valves.

3.18 ABOVEGROUND MANUAL GAS SHUTOFF VALVE SCHEDULE

A. Valves for pipe sizes NPS 2 (DN 50) and smaller at service meter shall be one of the following:

1. One-piece, bronze ball valve with bronze trim.

2. Two-piece, full-port, bronze ball valves with bronze trim.

3. Bronze plug valve.

B. Valves for pipe sizes NPS 2-1/2 (DN 65) and larger at service meter shall be one of the following:

1. Two-piece, full-port, bronze ball valves with bronze trim.

2. Bronze plug valve.

3. Cast-iron, nonlubricated plug valve.

C. Distribution piping valves for pipe sizes NPS 2 (DN 50) and smaller shall be one of the following:

1. One-piece, bronze ball valve with bronze trim.

2. Two-piece, full-port, bronze ball valves with bronze trim.

3. Bronze plug valve.

D. Distribution piping valves for pipe sizes NPS 2-1/2 (DN 65) and larger shall be one of the following:

1. Two-piece, full-port, bronze ball valves with bronze trim.

2. Bronze plug valve.

3. Cast-iron, lubricated plug valve.

E. Valves in branch piping for single appliance shall be one of the following:

1. One-piece, bronze ball valve with bronze trim.

2. Two-piece, full-port, bronze ball valves with bronze trim.

3. Bronze plug valve.

END OF SECTION

23 1123

23 23 00

REFRIGERANT PIPING

PART 1 - GENERAL

1.01 SECTION INCLUDES

A. Building refrigerant piing, fittings, and refrigeration specialties.

1.02 REFERENCES

A. American Society of Mechanical Engineers (ASME)

1. ASME B16.22, Wrought Copper and Copper Alloy Solder - Joint Pressure Fittings.

2. ASTM A307, Standard Specification for Carbon Steel Bolts and Studs, and Threaded Rod 60,000 PSI Tensile Strength.

3. ASME B16.26, Cast Copper Alloy Fittings for Flared Copper Tubes.

4. ASME B31.5, Refrigeration Piping and Heat Transfer Components.

B. American Society for Testing and Materials(ASTM)

1. ASTM A 307, Standard Specification for Carbon Steel Bolts and Studs, 60,000 PSI Tensile Strength.

2. ASTM B 280, Standard Specification for Seamless Copper Tube for Air Conditioning and Refrigeration Field Service.

C. Canadian Standards Association (CSA)

1. CSA B52, Mechanical Refrigeration Code.

D. Environment Canada (EC)

1. EPS1/RA/1, Environmental Code of Practice for the Elimination of Fluorocarbon Emissions from Refrigeration and Air Conditioning Systems.

E. Health Canada / Workplace Hazardous Materials Information System (WHMIS)

1. Material Safety Data Sheets (MSDS).

F. Province of Newfoundland and Labrador Boiler, Pressure Vessel and Compressed Gas Regulations

1.03 SUBMITTALS

A. Submit the following in accordance with Section 01 33 00 - Submittal Procedures.

1. Catalog Data:
   a. Data on pipe materials, fittings, and accessories.
   b. Refrigerant Specialties: Manufacturers catalog information including capacity, component sizes, rough-in requirements, etc.

2. Manufacturer's installation instruction: Submit hanging and support methods, joining procedures and isolation.

3. Certification of welders

4. Certification of sub contractors for manufacturer extended warranty.

1.04 QUALITY ASSURANCE

A. Comply with ASME B31.5, Refrigeration Piping.

1.05 DELIVERY, STORAGE AND HANDLING

A. Protect products from damage.

B. Dispose of all waste in accordance with Section 01 7419, Construction waste management and disposal.

PART 2 - PRODUCTS

2.01 PRODUCT OPTIONS AND SUBSTITUTIONS

A. Alternate products may be accepted; follow section 01 2500, Substitution Procedures.

2.02 REFRIGERANT PIPING

A. Service: design pressure 2070 kPa and temperature 121°C.

B. Brazed:

1. Fittings: wrought copper to ASME B16.22.

2. Joints: silver solder, 45% Ag - 80% Cu - 5% P and non-corrosive flux for copper to steel or brass; Silfoss-15 for copper to copper.

C. Flanged:

1. Bronze or brass, to ASME B16.24, Class 150 and Class 300, tongue and groove type.

2. Gaskets: suitable for service.

3. Bolts, nuts and washers: to ASTM A307, heavy series.

D. Flared:

1. Bronze or brass, for refrigeration, to ASME B16.26.

2.03 PIPE SLEEVES

A. Hard copper or steel, sized to provide 6 mm clearance between sleeve and uninsulated pipe or between sleeve and insulation.

2.04 VALVES

A. 7/8 ODS and under: Class 500, 3.5 MPa, globe or angle non-directional type, diaphragm, packless type, with forged brass body and bonnet, moistureproof seal for below freezing applications, brazed connections.

B. Over 7/8 ODS: Class 375, 3 MPa, globe or angle type, diaphragm, packless type, back-seating, cap seal, with cast bronze body and forged brass bonnet, moisture-proof seal for below freezing applications, brazed connections, non-rotating, self aligning swivel disc, Teflon seat, -400C - 1630C.

C. Ball valves 7 3/8 ODS to 3 1/8 ODS: maximum WP 4MPa, -400C to 1490C, live loaded stem seal, double “O” ring hermetically sealed body, blowout proof stem, seal cap “O” ring sealed, valve position indicators, forged brass body bonnet, brass cap, triple sealed plated steel item, Teflon ball seals and gasket, extended copper connections, helium leak test to maximum 0.28 g/yr.

D. Check valves 7/8 ODS to 3 1/8 ODS cast bronze body, brass bonnet, Teflon seat, internal parts removable minimum opening pressure 3.5 kPa, maximum WP 3.5 kPa - 290C to 1490C, UL and CSA approved.

E. Check valves 3/8 ODS to 7/8 ODS: brass construction, Teflon seal, removable piston, maximum WP 3.5 kPa, -400C to 1490C, suitable for high side, low side and hot gas. UL and CSA approved, maximum opening pressure 3.5 kPa.

2.05 REFRIGERANT SPECIALITIES

A. Provide manufacturer required refrigeration specialties.

PART 3 - EXECUTION

3.01 MANUFACTURER’S INSTRUCTIONS

A. Compliance: comply with manufacturer’s written recommendations or specifications, including product technical bulletins, handling, storage and installation instructions, and datasheet.

3.02 GENERAL

A. In accordance with Section 23 05 05 – Installation of Pipework, supplemented as specified herein.

B. Install in accordance with CSA B52, EPS1/RA/1 and ASME B31.5.

3.03 BRAZING PROCEDURES

A. Bleed inert gas into pipe during brazing.

B. Remove valve internal parts, solenoid valve coils, sight glass.

C. Do not apply heat near expansion valve and bulb.

3.04 PIPING INSTALLATION

A. General:

1. Soft annealed copper tubing: bend without crimping or constriction, hard drawn copper tubing: do not bend. Minimize use of fittings.

2. Hot gas lines:
   a. Pitch at least 1:240 down in direction of flow to prevent oil return to compressor during operation.
   b. Provide trap at base of risers greater than 1800 mm high and at each 6000 mm thereafter.
   c. Provide inverted deep trap at top of risers.
   d. Provide double risers for compressors having capacity modulation.
      1. Large riser: install traps as specified above.
      2. Small riser: size for 5.1 m/s at minimum load. Connect upstream of traps on large riser.

3.05 PRESSURE AND LEAK TESTING

A. Close valves on factory charged equipment and other equipment not designed for test pressures.

B. Leak test to CSA B52 before evacuation to 2MPa and 1MPa on high and low sides respectively.

C. Test Procedure: Build pressure up to 35 kPa using nitrogen leave for 8 hours.

3.06 FIELD QUALITY CONTROL

A. Site Tests/Inspection

1. Close service valves on factory charged equipment.

B. Ambient temperatures to be at least 13 degrees C for at least 12 hours before and during dehydration.

C. Use copper lines for largest practical size to reduce evacuation time.

D. Use two-stage vacuum pump with gas ballast on 2nd stage capable of pulling 5 Pa absolute and filled with dehydrated oil.

E. Measure system pressure with vacuum gauge. Take readings with valve between vacuum pump and system closed.

F. Triple evacuate system components containing gases other than correct refrigerant or having lost holding charge as follows:

1. Twice to 14 Pa absolute and hold for 4 h.

2. Break vacuum with refrigerant to 14 KPa.

3. Final to 5 Pa absolute and hold for at least 12 h.

4. Isolate pump from system, record vacuum and time readings until stabilization of vacuum.

5. Submit test results to Owner's Representative.

G. Charging:

1. Charge system through filter-drier and charging valve on high side. Low side charging not permitted.

2. With compressors off, charge only amount necessary for proper operation of system. If system pressures equalize before system in fully charged, close charging valve and start up. With unit operating, add remainder of charge to system.

3. Re-purge charging line if refrigerant container is changed during charging process.

H. Checks:

1. Make checks and measurements as per manufacturer's operation and maintenance instructions.

2. Record and report measurements to Owner's Representative.

I. Manufacturer's Field Services:

1. Have manufacturer of products, supplied under this Section, review work involved in the handling, installation/application, protection and cleaning, of its products and submit written reports, in acceptable format, to verify compliance of work with Contract.

2. Provide manufacturer's field services consisting of product use recommendations and periodic site visits for inspection of product installation in accordance with manufacturer's instructions.

3. Schedule site visits, to review work , at stages listed:
   a. After delivery and storage of products, and when preparatory work, or other work, on which the work of this Section depends, is complete but before installation begins.
   b. Twice during progress of work at 25% and 60% complete.
   c. Upon completion of the work, after cleaning is carried out.

4. Obtain reports, within three (3) working days of review, and submit, immediately, to Owner's Representative.

3.07 DEMONSTRATION

A. Instructions:

1. Post instructions in frame with glass cover in accordance with Section 01 78 00 – Closeout Submittals and CSA B52.
   a. Perform cleaning operations in accordance with manufacturer's recommendations.
   b. On completion and verification of performance of installation, remove surplus materials, excess materials, rubbish, tools and equipment.

END OF SECTION

23 23 00

23 3000

AIR SYSTEMS AND EQUIPMENT

PART 1 - GENERAL

1.01 REQUIREMENTS

A. Provide products, labor and services necessary to construct and demonstrate proper functionality of the systems indicated on the drawings and specified herein.

B. Conform with applicable provisions of the General Conditions, the Supplemental General Conditions and General Requirements.

1.02 GENERAL

A. Install control dampers supplied under Section 23 09 00. Adjust dampers for smooth operation.

1.03 SUBMITTALS

A. Submit the following for review and approval:

1. All equipment shown on the equipment schedule and elsewhere on the drawings. Submit evidence or certification that equipment complies with ASHRAE Std. 90.1.

2. Ductwork construction standards, sheet metal, plenums, ductwork accessories, etc.

3. Flues and vents: Materials of construction and accessories. For vents with horizontal offsets or expansion joints, submit layout for review.

4. Air Filters and Filter Gauges

5. Grilles, Registers & Diffusers: Configuration, materials of construction, finish, mounting details, and performance data including throw, static-pressure drop, and noise ratings. Submit for type only, but supplier shall check and verify that the indicated diffuser type and sizing are appropriate for each area. Advise of any concerns in any areas.

6. Layouts of systems covered by this section of the specifications. Layouts shall be at a scale appropriate for the areas shown. Include large scale sections as appropriate.

1.04 QUALITY ASSURANCE

A. Comply with the following codes & standards:

1. UMC 2006 Chapter 6 – Duct Systems

2. UMC 2006 Standard 6-2, Standard for Metal Ducts

3. SMACNA 2005 HVAC Duct Construction Standards – Metal and Flexible, including Addendums

4. SMACNA Round Industrial Duct Construction Standards – 1999

5. SMACNA Rectangular Industrial Duct Construction Standards – 2004

6. NFPA-90A-2002 - Standard for the Installation of Air-Conditioning and Ventilating Systems

B. Component Characteristics

1. Components within ducts and plenums shall be non-combustible or shall have a flame spread less than 25 and smoke developed less than 50 when tested as a composite product per NFPA 255, ASTM E84, or UL 723, except where specifically permitted by the UMC and noted in the drawings or specs.

1.05 SOUND LEVELS

A. Sound levels attributable to mechanical equipment are designed to result in sound levels of RC 35 for offices, conference rooms, RC 30 for classrooms, etc., and RC 25 for meeting rooms, measured within the rooms. Mechanical equipment that has been substituted for the specified equipment shall perform within the specified equipment sound limitations, or will be replaced or adjusted as required. Sound levels attributable to duct vibration that result in noticeable noise or vibration to duct hangers, lighting fixtures, ceiling tees or diffusers shall be re-supported or adjusted until the disturbing noise is brought within acceptable limits.

1.06 DIMENSIONS

A. Compare all drawings and verify all dimensions both on the drawings and in the field before laying-out, cutting, and fabricating the work.

B. Refer to Section 23 05 00, Common Work Requirements for HVAC, for coordination drawing requirements.

PART 2 - PRODUCTS

2.01 DUCTWORK AND PLENUMS

A. Materials: Construct all ducts, casings, plenums etc. from galvanized steel sheets except as indicated. Sheets shall be free of blisters, slivers, pits, and imperfectly galvanized spots. Reinforcing angles and bars, and duct support materials shall be same material as ductwork if exposed to the air stream, or galvanized steel if not exposed to the air stream.

1. Galvanized Steel: Per ASTM A653/A653-03 Standard Specification for Steel Sheet, Zinc-Coat (Galvanized) or Zinc-Iron Alloy-Coat (Galvanized) by the Hot Dip Process, with minimum 1.25oz/sf zinc.

2. Aluminum: Alloy 3003-H14

3. Stainless Steel: 340SS, provide No. 2B finish in exposed areas

4. Fiberglass Ductwork (Ductboard): Use only where specifically noted. Minimum 1-inch thick, 3 lb. density rigid fiberglass ductboard with glass fiber reinforced vapor barrier, UL Class 1, labeled on each board per UMC-06 Standard 6-5.

   a. Properties:
      1. Thermal conductivity for 1-inch thickness shall not exceed 0.22 Btuh/SF-F at 75 deg F
      2. Noise reduction coefficient of 0.80 on Mounting No. 6.
   b. Tape: 3-inch "Hardcast" mineral impregnated woven fiber tape with an actuator/adhesive applied in accordance with the manufacturer's directions, or thermlok heat sensitive tapes. Pressure sensitive tapes will not be accepted.
   c. Owens-Corning Fiberglass, Johns Manville, Certain-Teed or equivalent. Flexural rigidity (E.I.) average shall not be less than 475.

5. Polyvinyl Coated Galvanized Steel: Minimum 4 mil polyvinyl coating. Foremost Manufacturing Company, Southfield, Michigan. Model PCD 4 by 1 for exterior coating only, or Model PCD 4 by 4 for both interior and exterior coating.

B. Flexible Ducts: Factory fabricated, listed as a Class 1 Air Duct per UL 181 with aluminum foil interior liner, corrosion resistant helix mechanically locked to fabric to ensure dimensional stability, helix separated from air stream, 1.5-inch fiberglass insulation with conductance not to exceed 0.23 Btuh-in/Hr-SF-F, and fire retardant outer vapor barrier. Ducts shall be rated at 12- inch positive pressure, 5-inch negative pressure, 0.1 perm per ASTM E96, and -20 to +250°F. Flexmaster Type 3, Technaflex 57K, OAE.

C. Ductwork Accessories

1. Sealers: Water based, for use on galvanized steel and with the other materials specified herein, suitable for use at -20 to +200°F and duct pressures to 10 inches wg, dry to the touch within 12 hours, sufficiently flexible to pass a 0.25-inch mandrel test, listed per UL- 181A & 181B, and suitable for storage and application at 40–110°F. Approved Manufacturers: Carlisle Coatings & Waterproofing “Hardcast,” Foster, RCD, AM Conservation Group, OAE.

2. Tapes: 4” woven cotton fiber impregnated with mineral gypsum and modified acrylic/silicone activator to react exothermically with tape to form hard, durable, airtight seal. Water, mold, and mildew resistant for indoor and outdoor service. Sealant shall be modified styrene acrylic.

2.02 SHEET METAL ACCESSORIES

A. Dampers: Factory fabricated, suitable for use with air at -20 to +240°F, galvanized steel housing and blades except as noted, rated for indicated pressures in either direction and performance rated per AMCA-500.

1. Shafts: Square or hexagonal steel, 3/8-inch or 1/2-inch, continuous through damper, mechanically fastened to damper blade, and extending through frame as required for actuator or standoff bracket and locking quadrant as required by table below.

2. Bearings: Provide for each side of each shaft, molded synthetic or stainless steel sleeve type.

3. Multi-blade dampers: Except as indicated, provide parallel-blade for 2-position applications and opposed blade for modulating applications. Provide jackshafts as required to drive large dampers.

4. Air pressure drop shall not exceed:
   a. Dampers rated at 1500 FPM: 0.1 in wg at 1500 FPM
   b. Dampers rated at 4000 FPM: 0.1 in. wg at 4000 FPM

5. The dampers described in this section are assigned Type Numbers D1 through D23. The following table summarizes key characteristics of each type of damper. Drawings and Part 3 – Execution, indicate which type of damper to use in each application.

Type	Shape	Blade	Max Size (inches)	Multiple Sections	Rated Velocity (FPM)	Rated Shutoff Press. (in. wg)	Seals	Leakage (CFM/SF @ 1 in. DP)	Notes	Ruskin Model
D1	Rect	Flat	36 x 12	No	1500	2.5	No	--	1	MD15
D1	Rect	3V	48 x 48	No	1500	2.5	No	--	1	MD15
D2	Rect	Flat	36 x 12	No	1500	2	No	--	1	MD25
D3	Rect	3V	48 x 48	Yes	1500	2	No	80	1	MD35
D4	Rect	3V	48 x 72	Yes	1500	2.5	No	40		CD35
D5	Rect	3V	48 x 72	Yes	1500	2.5	Yes	4		CD36
D6	Rect	Airfoil	60 x 72	Yes	4000	6	Yes	2	2	CD50
D7	Rect	Airfoil	60 x 72	Yes	4000	6	Yes	2		CD60
D20	Round	Flat	20	No	1500	2	No	40	1	MDSR25
D21	Round	Double	40	No	4000	10	Yes	4		CDR25
D22	Round	Double	24	No	4000	6	Yes	6		CDSR25
D23	Oval	Double	72 x 24	No	4000	10	Yes	4		CDO25

Note 1: Provide locking hand quadrant and 2-inch standoff bracket

Note 2: Aluminum Construction

B. Flexible Connectors: Except as noted flexible connectors shall be heavy fiberglass cloth; coated to be air tight, water tight, fire retardant; suitable for temperatures of -20 to +200° F; rated for 10 in. wg positive or negative; with tensile strength minimum 450 lb/inch in the warp and 340 lb/inch in the filling. Provide flexible connectors in 3-3-3 configuration, with 3-inch galvanized steel strip along each edge and 3-inches of flexible fabric in the center.

1. Standard Applications: Flame spread 20, smoke developed 40, Ventfabrics Ventglas OAE

2. Applications Exposed to Sun and Weather: Double coated with du Pont Hyphalon, Ventfabrics Ventlon OAE.

3. Applications from 200 – 500° F: Tensile Strength 285 lb/inch in the wrap and 185 lb/inch in the filling. Ventfabrics Ventsil OAE

4. Corrosive Applications: Teflon coated, Ventfabrics Ventel OAE.

C. Duct and Plenum Access Doors: Galvanized steel, gasketed. Size as required to properly inspect and service components located within the ductwork. Ruskin, Acudoor, Ductmate, OAE.

1. Rectangular ducts up to 2-inch positive or negative SP: Minimum 22 gauge frame and door thru 12-inch size, 20 gauge door for larger sizes, double gasketed (between door and frame, and between frame and duct) with cam locks, either hinged or removable. Ruskin ADH22, ADC22, ADHW22, or ADCW22, Ventfabrics, OAE

2. Round or Rectangular Ducts to 12-inch Positive Pressure: Removable oval sandwich style with gasketed inner door, insulated outer door, and large hand knobs. Ruskin ADR and ADF.

3. Ducts to 12-inch Negative Pressure: Ruskin ADHP-3.

4. Plenum Access Doors: Factory fabricated frame and door rated to 4-inch positive or 8- inch negative pressure. Provide mill finish and neoprene seals to limit leakage to less than 0.1 CFM/inch perimeter with door closed. Doors shall open against air pressure.
   a. Frame: Extruded aluminum with 1.5-inch flange and mitered corners
   b. Door: Extruded aluminum mitered frame, double wall 24-gauge galvanized steel panel with minimum R-5 insulation isolated from the air stream, full-length piano hinge and two heavy-duty latches similar to Ventlok 310.
   c. Approved Manufacturers: Ruskin GPAD or approved equal.

D. Turning Vanes:

1. Single wall: Per SMACNA HVAC Duct Construction Standards Figure 2-3 & 2-4.

2. Double wall: Airfoil shape with smoothly rounded entry nose and extended trailing edge, minimum 2” x 3” vane crossection, hot dipped galvanized steel, 26-gauge vanes, 24- gauge runner, each vane double pinned to each runner, field adjustable to required elbow aspect ratio. Performance shall not exceed the following for a 24 x 24 elbow at 2000 FPM average: Air pressure drop 0.105 in. wg; aound generated 54 dB re 10^-12 watts. Aero/Dyne Co. Model HEP, Airsan, Elgen, or equivalent.

E. Roof Curbs and Equipment Support Rails: Factory fabricated, minimum 12-inch high, galvanized steel, configured to account for roof pitch where pitch exceeds 1/4-inch/ft or where required by manufacturer of supported equipment. Coordinate with roofer and provide cant and step if needed to match roof construction.

1. Roof Curbs: 1.5-inch fiberglass insulation with nominal 2" x 2" wood nailer. Provide damper tray where a damper is indicated. Thycurb TC, Greenheck, OAE.

2. Equipment Support Rails: Nominal 2" x 4" wood nailer. Thycurb TEMS, Greenheck OAE

F. Louvers: 4-inch extruded 6063-T5 aluminum alloy frame and blades with flange, mill finish, and 1/2-inch galvanized steel bird screen.

1. Structural: Designed and furnished to carry wind load of not less than 20 psf. Intermediate mullions and supports if provided as part of louver, shall not be visible from the exterior.

2. Air Pressure Drop: Less than 0.20 in wg at 1000 FPM over free area (8.58 square feet), intake or exhaust per AMCA 500 based on 48 x 48 test sample.

3. Moisture Penetration: Less than 0.01 oz/sf over 15 minute test per AMCA-500 at 873 FPM intake over free area based on 48 x 48 test sample.

4. Ruskin ELF375DX OAE.

G. Acoustic Louvers

1. Ruskin ACL 1245, 12 inches deep, with 45 degree blade angle, 22 percent free area (48" x 48" typical unit with .15 inch w.g. maximum pressure drop, at 4277 cfm air flow). Frame and blade material shall be galvanized steel. Free field noise reduction shall be:

Band Frequency (Hz)	63	125	250	500	1000	2000	4000	8000
Reduction (db)	14	13	15	20	23	22	20	20

2. Provide bird-screen, steel channel frame, Ruskatherm blanket insulation, and perforated steel interior surface that covers insulation.

H. Thermometers: As specified in Section 23 05 05.

I. Barometric Pressure Balance Dampers: Air Balance, Inc. units with adjustable counter weight, aluminum air foil design blades, nylon bearings. Match frame assembly to wall or duct.

2.03 FLUES AND VENTS FOR FUEL-FIRED EQUIPMENT

A. General: Factory-built metallic vent system, UL Listed components. Each component shall bear indication of its UL listing.

1. Heat Resistant Paint: Glidden, Metallite OAE.

2. Approved Vent Manufacturers: Metal Fab, Metalbestos, Schebler, Ampco, OAE.

B. Direct Vent: For use with direct vented boilers.

1. All vent piping shall be stainless steel and of an approved manufacturer make and model.

a. For the design basis boilers (Lochinvar Knight XL 601) the approved manufactures and are as follows:

1. Heat Fab
2. Z Flex
3. Metal Fab
4. Security Chimney

2.04 FILTERS AND FILTER GAUGES

A. Rated per ASHRAE Std. 52.1; Class 1 or 2 per UL Std. 900; glass fiber media; suitable for operation from -20° F to +170° F; corrosion resistant; suitable for installation with pleats either horizontal or vertical, and for air flow horizontal, vertical upflow, or vertical downflow; suitable for face velocity up to 625 FPM. Unless specified elsewhere, pre-filters shall be MERV-7, and final filters (where specified) shall be MERV-14. AAF, Camfil Farr, or approved equal.

		MERV RATING						
		7	11	14	11	14	11	14
Description							High Capacity	
Configuration		2-inch or 4-inch	12-inch Cartridge		6-inch Cartridge		12-inch Cartridge	
Initial Resistance	in. wg.	0.26	0.25	0.58	0.39	0.58	0.29	0.49
Rated Velocity	FPM	500	500	500	500	500	500	500
Max Velocity	FPM	625	625	625	625	625	750	750
Recommended Final Resistance	in. wg.	0.7	1.5	1.5	1.5	1.5	1.5	1.5
Gross Media per 24 x 24 Filter	SF	14 Pleats per foot	62	62	105	125	175	175
Housing		Cardboard	Polystyrene or Aluminized Steel	Polystyrene or Aluminized Steel	Polystyrene or Aluminized Steel			
Frame		Channel	Gasketed		Gasketed		Gasketed	
AAF Model		Perfect Pleat	VariCel RF		VariCel M-Pak		VariCel V	
Camfil Farr Model		3030	RigaFlow					

B. Filter Gauges: Provide a filter gauge for each bank of filters. Gauges shall be magnehelic type with static pressure tips and inter-connecting piping. Ranges shall be 0-1 inch w.g. for all filters except bag filters which shall have a range of 0-2 inches w.g.

2.05 FANS

A. General

1. Construction

a. Factory fabricated fan, motor, drive and accessories, listed per UL-705 , with air flow rated per AMCA 211 and sound rated per AMCA Standard 301.

b. Fan wheel: Statically & dynamically balanced, with shaft sized so first critical speed is minimum 25% above maximum operating speed.

c. Motor and Drive: Premium efficiency ODP motor per Spec Section 23 05 00, direct drive or belt driven as indicated in schedule on drawings, bearings with 100,000 hr L-10 life.

d. Variable Speed Applications: Provide Class F insulation.

e. Belt Drives: Adjustable pitch sheave up to 5 Hp, fixed pitch above this Hp, cast and machined pulleys with all components sized for 150% of motor Hp.

f. Dampers:

g. Accessories:

1. Roof Curb: Minimum 12-inch galvanized steel, fiberglass insulated, with wood nailer, damper tray and flange. Provide cant and step if needed for proper seal with roof.

2. See Section 23 05 48 for Vibration Isolation requirements.

B. Centrifugal Roof Exhaust Fans

1. Leakproof construction.

2. Housing: Spun aluminum construction, reinforced wind band welded to one-piece curb cap with mounting holes on the side and integral spun venturi, spun aluminum motor compartment with readily removable cover and breather tube. All other structural components shall be galvanized steel.

3. Fan wheel: Backward inclined, centrifugal, non-overloading.

4. Motor and Drive: Motor out of the air stream, cooled with ambient air. Motor, drive and fan wheel resiliently mounted on neoprene isolators.

5. Electrical: Disconnect NEMA-1 if protected from the weather, or NEMA-3R if exposed to the weather, wired to motor, with all wiring and components per NEC and either UL Listed or UL recognized.

6. Accessories: Stamped aluminum nameplate, hinge kit to allow tilting fan up to inspect wheel, retaining chains, conduit chase and roof curb.

7. Approved Manufacturers: Greenheck Type, G, GB, CUE or CUBE as indicated. Cook, ACME, OAE.

2.06 COILS

A. Galvanized steel casing, copper tubes and aluminum fins except as noted, with tubes mechanically expanded into fins, circuited to allow completely draining and venting coil, drain and vent connections, with performance rated per AHRI Standard 410. Do not exceed scheduled air or water pressure drops by more than 5 percent.

PART 3 - EXECUTION

3.01 DUCTWORK AND PLENUMS

A. Ductwork

1. Construct ductwork with wall thicknesses and reinforcing per the SMACNA HVAC Duct Construction Standards, Second Edition, 1995, and UMC 2006 Chapter 6,

2. Pressure Classes: Construct ductwork to the following pressure classes:

Duct Element Description	Pressure	Class
From Air Handling Unit to Terminal Unit:	P	4"
From Terminal Unit to Diffuser:	P	1"
From Return Grille to Fan:	N	2"
From Exhaust Register to Exhaust Fan:	N	2"

3. Minimum thickness for sheet metal ductwork: 26 gauge.

4. Sealing: Seal ductwork and plenums as follows:

	----------Seal Class----------			
	-----Supply Ducts----			
Location	≤2 in. wg	≥2 in wg	Exhaust	Return
Outdoors	A	A	C	A
Unconditioned Spaces	B	A	C	B
Conditioned Spaces including RA Plenums	C	B	B	C

Seal Class	Description
A	All transverse joint, longitudinal seams and duct wall penetrations.
B	All transverse joints and longitudinal seams.
C	Transverse joints

a Apply duct sealer to inside of seams and joints. Do not use pressure sensitive tape as the primary sealant.

5. Clearance to earth: Maintain minimum 4-inch separation between ductwork insulation and earth.

6. Openings in Ductwork: During installation protect the open ends of ducts to prevent debris and dirt from entering.

7. Provide turning vanes in square elbows of low velocity supply and exhaust ductwork.

8. Collars: Where exposed ducts pass through walls, floors, or ceilings, provide a tight- fitting, flanged sheetmetal collar around duct and tight against finished surface to cover opening and present a neat appearance. Lock collar to duct.

9. Cross Breaking: Cross-break low velocity rectangular sheetmetal ducts on all four sides. Cross break sheet metal between standing seams or reinforcing angles. The center of cross break shall be of the required height to assure surfaces being rigid. Do not cross- break high velocity plenum panels.

10. Grilles Registers and Diffusers: Install plumb, affix to general construction as

11. appropriate, make air-tight connection to ductwork, and adjust air flow pattern to achieve appropriate velocities in the occupied zones. Request direction from Engineer if any question exists regarding proper air flow adjustment.

12. Duct Thermometers: Provide thermometers to indicate mixed air, outside air, and supply air of indoor air handling units over 2,500 cfm and where shown on the Drawings.

13. Test Holes: Provide test holes in ducts at locations where testing is required per Section 23 05 93 and as requested by the T&B agent. Close test holes with rubber plugs. Reseal all insulated ductwork with the same insulation, jacket and vapor barrier material after T&B is complete.

14. Closure Systems:
    a. Rigid Air Ducts: Comply with UL 181A – Standard for Closure Systems for Use with Rigid Air Ducts and Air Connectors.
    b. Flexible Air Ducts: Comply with UL 181B – Standard for Closure Systems for Use with Flexible Air Ducts and Air Connectors.

15. Factory Made Air Ducts: Install in accordance with the terms of their listing and the manufacturer's recommendations.

16. Acoustic Insulation: See Section 23 0700, HVAC Insulation. Fabricate ductwork so the dimensions indicated on the drawings are the clear dimensions for air flow inside the acoustic insulation.

17. Coordination with Building Construction
    a. General: The drawings show the general intended configuration of the ductwork. Provide additional offsets where necessary to coordinate with the building construction or with the work of other disciplines. Transition ductwork as required at no change in contract price. Where this is necessary, submit for review and maintain the indicated flow areas.

b. Ductwork is frequently routed through bar joists and between bar joists. Coordinate duct locations with joist submittals prior to fabrication.

B. Hangers and Supports

1. Securely support ducts per SMACNA and UMC Table 6-7. Provide support at each concentrated load and at each change in direction. Provide supports on each side of rectangular ducts and equipment. Where vertical ducts pass through floors or roofs, support with angles or other steel members attached to minimum two opposite sides of duct. Size supports to rigidly support the ductwork. Provide lateral support.

2. Hangers for terminal units: Minimum four 1" x 1/8" galvanized steel straps or two angle trapeze supports.

3. Horizontal Round Ducts: 30 inches and larger in diameter: Provide 2" x 2" x 1/8" black steel rolled angle ring on 6-ft centers, and support from angle.

3.02 DUCTWORK ACCESSORIES

A. Dampers: Install dampers with shafts horizontal. Locate dampers so that actuators are readily accessible. Verify that dampers operate smoothly.

1. Manual Dampers (Balancing Dampers): Damper Types D1 through D23 are all suitable for use as manual balancing dampers. Provide locking quadrants.

2. Automatic Applications: The following damper types may be used for automatic applications: D4, D5, D6, D7, D21, D22 and D23. Provide damper actuators per Section 23 0900.

B. Flexible Connectors: Provide flexible connectors at locations indicated on the drawings and at the inlet and outlet of each fan directly connected to duct system. Select flexible connectors appropriate for the application. Provide steel spring vibration isolators spanning across flexible connections of isolated fan housings to prevent blow-apart due to horizontal displacement of fan housings.

C. Access Doors: Provide as required for access to all components located within ductwork. Locate to facilitate access to such components. Size as appropriate. In addition to locations specifically called out on the drawings or elsewhere in these specs, provide access doors at the following: FDs, SMDs, FSDs, instrumentation mounted within ductwork, fan bearings.

D. Turning Vanes: Provide turning vanes in square elbows of all supply ducts. Single wall turning vanes may be used in ducts up to 1500 FPM and 24-inch vane length. Provide double wall turning vanes in ducts exceeding either of these criteria.

E. Roof Curbs and Equipment Support Rails: Coordinate the location of roof curbs and rails with the roof structure, ductwork distribution, and other work. Install after roof deck is installed but before roof is insulated. Mount curbs and rails securely to deck per manufacturer’s recommendations. Provide counterflashing as required.

F. Louvers: Coordinate louver size and construction with structural and architectural openings to assure proper fit. Securely fasten louver to internal structural members to withstand a force of 25 lb/sf plus a safety factor of 3.0.

G. Instrumentation: Install duct thermometers and filter gauges so they are easily readable from the operator level.

3.03 FLUES AND VENTS FOR FUEL-FIRED EQUIPMENT

A. General: Install per the drawings and these specifications, manufacturer's instructions, the terms of the vent's UL Listing, the UMC and NFPA-211.

1. Use the same type vent for the entire system from the equipment connection to the termination outside. Provide all fittings, transitions, adapters, supports, storm collars, etc.

2. Install per the venting requirements of the appliance manufacturer. Comply with clearances per UL Listing. Minimize offsets and resistance to flow. System shall develop a positive flow adequate to remove products of combustion to outside. Do not run any portion of the vent system through any supply or return air duct or plenum. Do not connect the vent from any Category I or II (non-positive pressure) appliance with any Category III or IV (positive pressure) appliance. Do not install any manually operated damper at any point in vent system.

3. Properly support the system and make provisions for thermal expansion. Install so as to prevent leakage of flue gases into the building. Provide drain connections where condensate is likely to accumulate, and pipe to spill over floor drain.

4. Provide ventilated thimbles where vents pass through walls, floors and roof. Paint all galvanized or aluminized steel parts exposed to the weather with one coat of corrosion and heat-resistant primer, and one coat of heat resistant paint.

5. Terminate low heat appliances as indicated on the drawings, but not less than:
   a. 3 ft above the highest point where the vent passes the roof.
   b. 2 ft above any portion of a building within a horizontal distance of 10 ft.
   c. 3 ft above any forced air inlet located within 10 ft.

3.04 FILTERS AND FILTER GAUGES

A. Provide one set of MERV-7 temporary filters until testing and balancing is complete. Then immediately before the system is turned over to the Owner at the completion of the project, remove these filters and provide the specified filters.

3.05 GRILLES REGISTERS AND DIFFUSERS

A. Install grilles, registers & diffusers (GRDs) square with building construction. Mount sidewall GRDs minimum, 3-inches above floor level. If GRDs have provisions to

adjust the direction of air flow, submit a written recommendation regarding the best direction for air flows, obtain written approval from the Owner's Representative, and adjust GRDs accordingly.

B. Verify frame types with architectural RCPs prior to ordering GRDs.

3.06 FANS

A. Install in strict accordance to the manufacturer's installation instructions.

3.07 COILS

A. Install in strict accordance to the manufacturer's installation instructions.

3.08 ROOFTOP AIR HANDLING UNITS AND INDOOR FAN COIL UNITS

A. Install in strict accordance to the manufacturer's installation instructions.

3.09 CLOSEOUT ISSUES

A. Leakage Testing

1. Pressure test not less than 25% of the installed ductwork of each system rated at 3 in wg or more, either positive or negative pressure. Advise Owner's Representative when systems will be ready for testing. For large systems separate tests may be made on different sections. The Owner's representative will designate the sections to be tested, but not more than 24 hours in advance of test. Cap ends of ducts as required and provide equipment as required for testing.

2. Measure duct leakage per the SMACNA HVAC Duct Leakage Test manual. Leakage shall not exceed the following:

$L_{max} = CLP^{0.65}$, where
L_{max} = maximum permitted leakage, cfm/100 sf of duct surface area CL = Duct leakage class (cfm/100 sf at 1-inch wg)
= 6 for rectangular sheet metal, rectangular fiberglass, and round flexible ducts
= 3 for round and flat oval sheet metal or fiberglass ducts
P = Test pressure. Test pressure shall match system pressure class.

3. If sample is defective, the contractor shall repair or modify the defective section and re- test it to demonstrate compliance. In addition, for each section which fails its original pressure test, the Owner's Representative will designate an additional ductwork section of similar size, for the Contractor to test. This section will be in addition to 25% area originally planned to be tested. .

4. Complete all leakage testing and repairs prior to concealing ducts.

5. Submit a test report that documents the test procedure and results. Include:

a. Test equipment – model numbers, technical data, calibration data, etc.
b. Drawings showing the extent of the systems tested.
c. Test results.
d. Dates, witnesses, and signatures of witnesses.

B. Testing and Balancing: Test and balance the complete air tempering system as specified in Section 23 05 93. It is anticipated that the TAB effort will identify some system deficiencies. Work in a cooperative manner to identify the cause of these deficiencies. Where deficiencies are due to defects in installation, or workmanship, repair as required and re-test to demonstrate proper performance.

C. Cleaning

1. All ducts, coils, housing, registers, grilles, fans, etc., shall be clean when installed and shall be kept clean until the system is completed. As the various parts of the system are installed, they shall be wiped or blown clean and openings taped dust-tight with heavy paper or cardboard until the system is completed and ready for testing. At that time all covers and protective wrappings shall be removed. Where one has been torn or previously removed, the duct, coil, register, etc., shall be carefully cleaned of any dirt or dust that has entered the opening.

2. Before the ceiling is installed and final connections are made to the high velocity terminal units, it will be required that the fans be operated at full capacity to blow out dirt and debris from ducts. If it is not practical to use the main supply blower for this test, the ducts may be blown out in sections by a portable fan. After the ducts have been cleaned, the final connections shall be made to the high velocity units.

END OF SECTION

23 3000

THIS PAGE IS BLANK

233533

LISTED KITCHEN VENTILATION SYSTEM EXHAUST DUCTS

PART 1 - GENERAL

1.1 RELATED DOCUMENTS

A. Drawings and general provisions of the Contract, including General and Supplementary Conditions and Division 01 Specification Sections, apply to this Section.

1.2 SUMMARY

A. Section Includes:

1. Listed grease ducts.
2. Access doors.

1.3 ACTION SUBMITTALS

A. Product Data: For each type of product.

1. Include construction details, material descriptions, dimensions of individual components and profiles, and finishes for listed grease ducts.

B. Shop Drawings: For listed grease ducts.

1. Include plans, elevations, sections, and attachment details.
2. Include details of equipment assemblies. Indicate dimensions, weights, loads, required clearances, method of field assembly, components, and location and size of each field connection.
3. Detail fabrication and assembly of hangers and seismic restraints.

PART 2 - PRODUCTS

2.1 LISTED GREASE DUCTS

A. Description: Factory-fabricated, -listed, and -labeled, double-wall ducts tested according to UL 1978 and rated for 500 deg F continuously, or 2000 deg F for 30 minutes; with positive or negative duct pressure and complying with NFPA 211.

B. Construction: Inner shell and outer jacket separated by at least a 4-inch annular space filled with high-temperature, ceramic-fiber insulation.

1. Inner Shell: ASTM A 666, Type 304 stainless steel.

2. Outer Jacket: Aluminized steel or Stainless steel where concealed. Stainless steel where exposed.

C. Gaskets and Flanges: Ensure that gaskets and sealing materials are rated at 1500 deg F minimum.

D. Hood Connectors: Constructed from same material as grease duct with internal or external continuously welded or brazed joints.

E. Accessories: Tees, elbows, increasers, terminations, adjustable roof flashings, storm collars, support assemblies, thimbles, firestop spacers, and fasteners; fabricated from similar materials and designs as vent-pipe straight sections; all listed for same assembly. Include unique components required to comply with NFPA 96 including cleanouts, transitions, adapters, and drain fittings.

F. Grease Duct Supports: Construct duct bracing and supports from non-combustible material.

1. Design bracing and supports to carry static and seismic loads within stress limitations of the International Building Code.
2. Ensure that bolts, screws, rivets and other mechanical fasteners do not penetrate duct walls.

G. Comply with ASTM E 2336.

2.2 ACCESS DOORS

A. Description: Factory-fabricated, -listed, and -labeled, double-wall maintenance access doors tested according to UL 1978 and rated for 500 deg F (260 deg C) continuously, or 2000 deg F (1093 deg C) for 30 minutes; with positive or negative duct pressure and complying with NFPA 211.

1. Construction: 0.0625 inch ASTM A 666, Type 304 stainless-steel inner shell and aluminized-steel or stainless-steel outer cover with two handles.
2. Fasteners: Stainless-steel bolts and wing nuts.

a. Ensure that bolts do not penetrate interior of duct space.

3. Maintenance Access Door Dimensions: 7 x 7 inches.
4. Door Label: Mark door with uppercase lettering as follows: "ACCESS PANEL. DO NOT OBSTRUCT."

PART 3 - EXECUTION

3.1 EXAMINATION

A. Examine areas and conditions for compliance with requirements for installation tolerances and other conditions affecting performance of the Work.

B. Proceed with installation only after unsatisfactory conditions have been corrected.

3.2 INSTALLATION

A. Coordinate installation of roof curbs, equipment supports, and roof penetrations. Comply with requirements in Section 077200 "Roof Accessories."

B. Coordinate connections to kitchen exhaust hoods with requirements in Section 233813 "Commercial-Kitchen Hoods."

C. Coordinate connections to exhaust fans with requirements.

D. Coordinate firestopping where grease ducts penetrate fire separations with requirements in Section 078413 "Penetration Firestopping."

E. Comply with minimum clearances from combustibles and minimum termination heights according to product listing or NFPA 211 and UL 2221, whichever is most stringent.

F. Install airtight maintenance access doors where indicated.

G. Connections: Make grease duct connections according to the International Mechanical Code.

1. Grease duct to exhaust fan connections: Connect grease ducts to inlet side of fan using flanges, gaskets, and bolts.
2. Grease duct to hood connections:
   a. Make watertight grease duct to hood joints connections using flanges, gaskets, and bolts.

H. Support ducts at intervals recommended by manufacturer to support weight of ducts and accessories, without applying loading on kitchen hoods.

1. Securely attach supports and bracing to structure.

I. Grease Duct Enclosures: Comply with requirements of the International Building Code and ASTM E 2336.

J. Coordinate fire-rated enclosure construction with Section 092116.23 "Gypsum Board Shaft Wall Assemblies."

K. Repair damage to adjacent materials caused by listed kitchen ventilation system exhaust ducts installation.

3.3 FIELD QUALITY CONTROL

A. Perform air leakage test before concealment of any portion of the grease duct system.

END OF SECTION
233533

THIS PAGE IS BLANK

23 3713

DIFFUSERS, REGISTERS, AND GRILLES

PART 1 - GENERAL

1.01 RELATED DOCUMENTS

A. Drawings and general provisions of the Contract, including General and Supplementary Conditions and Division 01 Specification Sections, apply to this Section.

1.02 SUMMARY

A. Section Includes:

1. Round ceiling diffusers.

2. Rectangular and square diffusers.

B. Related Sections:

1. Division 23 Section "Air Duct Accessories" for fire and smoke dampers and volume- control dampers not integral to diffusers, registers, and grilles.

1.03 ACTION SUBMITTALS

A. Product Data: For each type of product indicated, include the following:

1. Data Sheet: Indicate materials of construction, finish, and mounting details; and performance data including throw and drop, static-pressure drop, and noise ratings.

2. Diffuser, Register, and Grille Schedule: Indicate drawing designation, room location, quantity, model number, size, and accessories furnished.

B. Samples for Initial Selection: For diffusers, registers, and grilles with factory-applied color finishes.

C. Samples for Verification: For diffusers, registers, and grilles, in manufacturer's standard sizes to verify color selected.

1.04 INFORMATIONAL SUBMITTALS

A. Coordination Drawings: Reflected ceiling plans, drawn to scale, on which the following items are shown and coordinated with each other, using input from Installers of the items involved:

1. Ceiling suspension assembly members.

2. Method of attaching hangers to building structure.

3. Size and location of initial access modules for acoustical tile.

4. Ceiling-mounted items including lighting fixtures, diffusers, grilles, speakers, sprinklers, access panels, and special moldings.

5. Duct access panels.

B. Source quality-control reports.

PART 2 - PRODUCTS

2.01 PRODUCT OPTIONS AND SUBSTITUTIONS

A. Alternate products may be accepted; follow section 01 2500, Substitution Procedures.

2.02 CEILING DIFFUSERS

A. Round Ceiling Diffuser:

1. Manufacturers: Subject to compliance with requirements:
   a. Anemostat Products; a Mestek company.
   b. Carnes.
   c. Hart & Cooley Inc.
   d. METALAIRE, Inc.
   e. Nailor Industries Inc.
   f. Price Industries.
   g. Titus.
   h. Tuttle & Bailey.
   i. Shoemaker

2. Devices shall be specifically designed for variable-air-volume flows.

3. Material: Steel.

4. Finish: Baked enamel, color selected by Architect

5. Face Style: Four cone.

6. Mounting: Duct connection.

7. Pattern: Fully adjustable.

8. Dampers: Radial opposed blade.

9. Accessories:

a. Equalizing grid.
b. Plaster ring.
c. Safety chain.
d. Wire guard.
e. Sectorizing baffles.
f. Operating rod extension.

B. Rectangular and Square Ceiling Diffusers:

1. Manufacturers: Subject to compliance with requirements,
   a. A-J Manufacturing Co., Inc.
   b. Anemostat Products; a Mestek company.
   c. Carnes.
   d. Hart & Cooley Inc.
   e. Krueger.
   f. METALAIRE, Inc.
   g. Nailor Industries Inc.
   h. Price Industries.
   i. Titus.
   j. Tuttle & Bailey.
   k. Shoemaker

2. Devices shall be specifically designed for variable-air-volume flows.

3. Material: Steel.

4. Finish: Baked enamel, white.

5. Face Size: 24 by 24 inches (600 by 600 mm), or 20 by 20 inches (500 by 500 mm), or 12 by 12 inches (300 by 300 mm)

6. Face Style: Three cone.

7. Mounting: Surface.

8. Pattern: Fixed.

9. Dampers: Combination damper and grid.

10. Accessories:
    a. Equalizing grid.
    b. Plaster ring.
    c. Safety chain.
    d. Wire guard.
    e. Sectorizing baffles.
    f. Operating rod extension.

2.03 SOURCE QUALITY CONTROL

A. Verification of Performance: Rate diffusers, registers, and grilles according to ASHRAE 70, "Method of Testing for Rating the Performance of Air Outlets and Inlets."

PART 3 - EXECUTION

3.01 EXAMINATION

A. Examine areas where diffusers, registers, and grilles are to be installed for compliance with requirements for installation tolerances and other conditions affecting performance of equipment.

B. Proceed with installation only after unsatisfactory conditions have been corrected.

3.02 INSTALLATION

A. Install diffusers, registers, and grilles level and plumb.

B. Ceiling-Mounted Outlets and Inlets: Drawings indicate general arrangement of ducts, fittings, and accessories. Air outlet and inlet locations have been indicated to achieve design requirements for air volume, noise criteria, airflow pattern, throw, and pressure drop. Make final locations where indicated, as much as practical. For units installed in lay-in ceiling panels,

1. locate units in the center of panel. Where architectural features or other items conflict with installation, notify Architect for a determination of final location.

C. Install diffusers, registers, and grilles with airtight connections to ducts and to allow service and maintenance of dampers, air extractors, and fire dampers.

3.03 ADJUSTING

A. After installation, adjust diffusers, registers, and grilles to air patterns indicated, or as directed, before starting air balancing.

END OF SECTION

23 3713

233813

COMMERCIAL-KITCHEN HOODS

PART 1 - GENERAL

1.1 RELATED DOCUMENTS

A. Drawings and general provisions of the Contract, including General and Supplementary Conditions and Division 01 Specification Sections, apply to this Section.

1.2 SUMMARY

A. Section includes Type I commercial-kitchen hoods.

B. Related Requirements:

1. Section 233533 "Listed Kitchen Ventilation System Exhaust Ducts" for fire-rated ducts connecting to kitchen hoods.

1.3 DEFINITIONS

A. Listed Hood: A hood, factory fabricated and tested for compliance with UL 710 by a testing agency acceptable to authorities having jurisdiction.

B. Type I Hood: A hood designed for grease exhaust applications.

1.4 ACTION SUBMITTALS

A. Product Data: For the following:

1. Standard hoods.
2. Filters/baffles.
3. Fire-suppression systems.
4. Luminaires.

B. Shop Drawings: Signed and sealed by a qualified professional engineer.

1. Shop Drawing Scale: 1/4 inch = 1 foot .
2. Show plan view, elevation view, sections, roughing-in dimensions, service requirements, duct connection sizes, and attachments to other work.
3. Show cooking equipment plan and elevation to confirm minimum code-required overhang.
4. Indicate performance, exhaust and makeup air airflow, and pressure loss at actual Project-site elevation.
5. Show control cabinets.

6. Show fire-protection cylinders, piping, actuation devices, and manual control devices.
7. Detail equipment assemblies and indicate dimensions, weights, loads, required clearances, method of field assembly, components, and location and size of each field connection.
8. Include diagrams for power, signal, and control wiring.
9. Duct Connections: Detail connections between ducts and hoods, including access doors and panels.
10. Piping Diagrams: Detail fire-suppression piping and components and differentiate between manufacturer-installed and field-installed piping. Include roughing-in requirements for drain connections. Show cooking equipment plan and elevation to illustrate fire-suppression nozzle locations.

    a. Piping Diagram Scale: 1/4 inch = 1.

1.5 INFORMATIONAL SUBMITTALS

A. Coordination Drawings: Reflected ceiling plans, drawn to scale, on which the following items are shown and coordinated with each other, using input from installers of the items involved:

1. Coordination Drawing Scale: 1/4 inch = 1 foot.
2. Suspended ceiling assembly components.
3. Structural members to which equipment will be attached.
4. Roof framing and support members for duct penetrations.
5. Items penetrating finished ceiling including the following:

    a. Luminaires.
    b. Air outlets and inlets.
    c. Sprinklers.
    d. Access panels.
    e. Moldings on hoods and accessory equipment.

B. Field quality-control reports.

1.6 MAINTENANCE MATERIAL SUBMITTALS

A. Furnish extra materials that match products installed and that are packaged with protective covering for storage and identified with labels describing contents.

1. Grease Filters/Baffles: One complete set(s).

1.7 QUALITY ASSURANCE

A. Engineering Responsibility: Preparation of Shop Drawings and comprehensive engineering analysis by a qualified professional engineer.

PART 2 - PRODUCTS

2.1 PERFORMANCE REQUIREMENTS

A. Electrical Components, Devices, and Accessories: Listed and labeled as defined in NFPA 70, by a qualified testing agency, and marked for intended location and application.

2.2 HOOD MATERIALS

A. Stainless-Steel Sheet: ASTM A 666, Type 304.

1. Minimum Thickness: 0.037 inch.
2. Finish: Comply with SSINA's "Finishes for Stainless Steel" for recommendations for applying and designating finishes.

a. Finish shall be free from tool and die marks and stretch lines and shall have uniform, directionally textured, polished finish indicated, free of cross scratches. Grain shall run with long dimension of each piece.

3. Concealed Stainless-Steel Surfaces: ASTM A 480/A 480M, No. 2B finish (bright, cold-rolled, unpolished finish).
4. Exposed Surfaces: ASTM A 480/A 480M, No. 6 finish (dull satin).
5. When polishing is completed, passivate and rinse surfaces. Remove embedded foreign matter and leave surfaces chemically clean.

B. Sealant: ASTM C 920; Type S, Grade NS, Class 25, Use NT. Elastomeric sealant shall be NSF certified for commercial-kitchen hood application. Sealants, when cured and washed, shall comply with requirements in 21 CFR 177.2600, for use in areas that come in contact with food.

1. Color: As selected by Architect from manufacturer's full range.
2. Backer Rod: Closed-cell polyethylene, in diameter larger than joint width.

C. Sound Dampening: NSF-certified, non-absorbent, hard-drying, sound-deadening compound for permanent adhesion to metal in minimum 1/8-inch thickness that does not chip, flake, or blister.

D. Gaskets: NSF certified for end-use application indicated; of resilient rubber, neoprene, or PVC that is nontoxic, stable, odorless, nonabsorbent, and unaffected by exposure to foods and cleaning compounds, and that passes testing according to UL 710.

2.3 GENERAL HOOD FABRICATION REQUIREMENTS

A. Welding: Use welding rod of same composition as metal being welded. Use methods that minimize distortion and develop strength and corrosion resistance of base metal. Make ductile welds free of mechanical imperfections such as gas holes, pits, or cracks.

1. Welded Butt Joints: Full-penetration welds for full-joint length. Make joints flat, continuous, and homogenous with sheet metal without relying on straps under seams, filling in with solder, or spot welding.

2. Grind exposed welded joints flush with adjoining material and polish to match adjoining surfaces.
3. Where fasteners are welded to underside of equipment, finish reverse side of weld smooth and flush.
4. Coat concealed stainless-steel welded joints with metallic-based paint to prevent corrosion.

B. For metal butt joints, comply with SMACNA's "Kitchen Ventilation Systems & Food Service Equipment Guidelines."

C. Where stainless steel is joined to a dissimilar metal, use stainless-steel welding material or fastening devices.

D. Form metal with break bends that are not flaky, scaly, or cracked in appearance; where breaks mar uniform surface appearance of material, remove marks by grinding, polishing, and finishing.

E. Sheared Metal Edges: Finish free of burrs, fins, and irregular projections.

F. In food zones, as defined in NSF, fabricate surfaces free from exposed fasteners.

G. Cap exposed fastener threads, including those inside cabinets, with stainless-steel lock washers and stainless-steel cap (acorn) nuts.

H. Fabricate pipe slots on equipment with turned-up edges sized to accommodate service and utility lines and mechanical connections.

I. Fabricate enclosures, including panels, housings, and skirts, to conceal service lines, operating components, and mechanical and electrical devices including those inside cabinets unless otherwise indicated.

J. Fabricate seismic restraints according to SMACNA's "Kitchen Ventilation Systems & Food Service Equipment Guidelines," Appendix A, "Seismic Restraint Details."

K. Fabricate equipment edges and backsplashes according to SMACNA's "Kitchen Ventilation Systems & Food Service Equipment Guidelines."

L. Fabricate enclosure panels to ceiling and wall as follows:

1. Fabricate panels on all exposed side(s) with same material as hood, and extend from ceiling to top of hood canopy and from canopy to wall.
2. Wall Offset Spacer: Minimum of 3 inches.
3. Wall Shelves and Overshelves: Fabricate according to SMACNA's "Kitchen Ventilation Systems & Food Service Equipment Guidelines," with minimum 0.0625-inch thick, stainless-steel shelf tops.

2.4 TYPE I EXHAUST HOOD FABRICATION

A. Weld all joints exposed to grease with continuous welds, and make filters/baffles or grease extractors and makeup air diffusers easily accessible for cleaning.

1. Fabricate hoods according to NSF 2, "Food Equipment."
2. Hoods shall be listed and labeled, according to UL 710, by a testing agency acceptable to authorities having jurisdiction.
3. Duct Collars: Minimum 0.0598-inch- (1.5-mm-) thick steel at least 3 inches (75 mm) long, continuously welded to top of hood and at corners.[Fabricate a collar with a 0.5-inch- (13-mm-) wide duct flange.]
4. Duct-Collar Fire Dampers: Collar and damper shall comply with UL 710 testing and listing required for the entire hood.

    a. Collar: Minimum 0.0598-inch- (1.5-mm-) thick stainless steel, at least 3 inches (75 mm) long, continuously welded to top of hood and at corners.[Fabricate a collar with a minimum 0.5-inch- (13-mm-) wide duct flange.]
    b. Blades: Minimum 0.1046-inch- (2.7-mm-) thick stainless steel, counterbalanced to remain closed after actuation.
    c. Blade Pivot and Spring: Stainless steel.
    d. Fusible Link: Replaceable, 212 deg F (100 deg C) rated.

B. Hood Configuration: Exhaust only.

C. Hood Style: Wall-mounted canopy.

D. Filters/Baffles: Removable, stainless-steel. Fabricate stainless steel for filter frame and removable collection cup and pitched trough. Exposed surfaces shall be pitched to drain to collection cup. Filters/baffles shall be tested according to UL 1046, "Safety for Grease Filters for Exhaust Ducts," by an NRTL acceptable to authorities having jurisdiction.

E. Luminaires: [Recessed] [Surface-mounted], [LED] [fluorescent] [incandescent] luminaires and lamps with lenses sealed vapor tight. Wiring shall be in conduit on hood exterior. Number and location of luminaires shall provide a minimum of 70 fc (753 lx) at 30 inches (762 mm) above finished floor.

1. Light switches shall be mounted [on front panel of hood canopy] [on wall adjacent to hood] [in hood control panel].
2. Luminaires: [LED] [Fluorescent] [Incandescent] complying with UL 1598.

F. Hood Controls: Hood-mounting control cabinet, factory wired, fabricated of stainless steel.

1. Exhaust Fan: On-off switches shall start and stop the exhaust fan. Interlock exhaust fan with fire-suppression system to operate fan(s) during fire-suppression-agent release and to remain in operation until manually stopped. Include red pilot light to indicate fan operation.

    a. Exhaust Fan Motor Starter: included as needed.
2. High-Temperature Control: Alarm shall sound and cooking equipment shall shut down before hood discharge temperature rises to actuation temperature of fire-suppression system.

G. Capacities and Characteristics: As scheduled.

2.5 WET-CHEMICAL FIRE-SUPPRESSION SYSTEM

A. Description: Engineered distribution piping designed for automatic detection and release or manual release of fire-suppression agent by hood operator. Fire-suppression system shall be listed and labeled for complying with NFPA 17A, "Wet Chemical Extinguishing Systems," by a qualified testing agency acceptable to authorities having jurisdiction.

1. Steel Pipe, NPS 2 (DN 50) and Smaller: ASTM A 53/A 53M, Type S, Grade A, Schedule 40, plain ends.
2. Malleable-Iron Threaded Fittings: ASME B16.3, Classes 150 and 300.
3. Piping, fusible links and release mechanism, tank containing the suppression agent, and controls shall be factory installed. Controls shall be in stainless-steel control cabinet mounted on hood or wall. Furnish manual pull station for wall mounting. Exposed piping shall be covered with chrome-plated aluminum tubing. Exposed fittings shall be chrome plated.
4. Liquid Extinguishing Agent: Noncorrosive, low-pH liquid.
5. Furnish electric-operated gas shutoff valve with clearly marked open and closed indicator for field installation.
6. Fire-suppression system controls shall be integrated with controls for fans, lights, and fuel supply and located in a single cabinet for each group of hoods immediately adjacent.
7. Wiring shall have color-coded, numbered terminal blocks and grounding bar. Spare terminals for fire alarm, optional wiring to start fan with fire alarm, red pilot light to indicate fan operation, and control switches shall all be factory wired in control cabinet with relays or starters. Include spare terminals for fire alarm, and wiring to start fan with fire alarm.

PART 3 - EXECUTION

3.1 EXAMINATION

A. Examine substrates and conditions, with Installer present, for compliance with requirements for installation tolerances and other conditions affecting performance of the Work.

B. Examine roughing-in for piping systems to verify actual locations of piping connections before equipment installation.

C. Proceed with installation only after unsatisfactory conditions have been corrected.

3.2 INSTALLATION

A. Coordinate equipment layout and installation with adjacent Work, including luminaires, HVAC equipment, plumbing, and fire-suppression system components.

B. Complete field assembly of hoods where required.

1. Make closed butt and contact joints that do not require filler.

2. Grind field welds on stainless-steel equipment smooth, and polish to match adjacent finish. Comply with welding requirements in "General Hood Fabrication Requirements" Article.

C. Install hoods and associated services with clearances and access for maintaining, cleaning, and servicing hoods, filters/baffles, grease extractor, and fire-suppression systems according to manufacturer's written instructions and requirements of authorities having jurisdiction.

D. Securely anchor and attach items and accessories to walls, floors, or bases with stainless-steel fasteners unless otherwise indicated.

E. Install hoods to operate free from vibration.

F. Install seismic restraints according to SMACNA's "Kitchen Ventilation Systems & Food Service Equipment Guidelines," Appendix A, "Seismic Restraint Details."

G. Install trim strips and similar items requiring fasteners in a bed of sealant. Fasten with stainless-steel fasteners at 48 inches o.c. maximum.

H. Install sealant in joints between equipment and abutting surfaces with continuous joint backing unless otherwise indicated. Provide airtight, watertight, vermin-proof, sanitary joints.

I. Install lamps, with maximum recommended wattage, in equipment with integral lighting.

J. Set initial temperatures, and calibrate sensors.

K. Set field-adjustable switches.

3.3 CONNECTIONS

A. Connect ducts according to requirements in Section 233300 "Air Duct Accessories." Install flexible connectors on makeup air supply duct. Weld exhaust-duct connections with continuous liquidtight joint.

B. Install fire-suppression piping for remote-mounted suppression systems according to NFPA 17A, "Wet Chemical Extinguishing Systems."

3.4 FIELD QUALITY CONTROL

A. Manufacturer's Field Service: Engage a factory-authorized service representative to test and inspect components, assemblies, and equipment installations, including connections.

B. Perform the following tests and inspections with the assistance of a factory-authorized service representative:

1. Test each equipment item for proper operation. Repair or replace equipment that is defective, including units that operate below required capacity or that operate with excessive noise or vibration.
2. Test and adjust controls and safeties. Replace damaged and malfunctioning controls and equipment.

3. Test water, drain, gas, and liquid-carrying components for leaks. Repair or replace leaking components.
4. Perform hood performance tests required by authorities having jurisdiction.
5. Perform fire-suppression system performance tests required by authorities having jurisdiction.

C. Commercial-kitchen hoods will be considered defective if they do not pass tests and inspections.

D. Prepare test and inspection reports.

3.5 DEMONSTRATION

A. Engage a factory-authorized service representative to train Owner's maintenance personnel to adjust, operate, and maintain commercial-kitchen hoods.

END OF SECTION
233813

23 72 00

PACKAGED ROOFTOP AIR CONDITIONING UNITS

PART 1 - GENERAL

1.01 GENERAL DESCRIPTION

A. This section includes the design, controls and installation requirements for outdoor packaged rooftop air conditioning units.

1.02 QUALITY ASSURANCE

A. Packaged air-cooled condenser units shall be certified in accordance with ANSI/AHRI Standard 340/360 performance rating of commercial and industrial unitary air-conditioning and heat pump equipment.

B. Unit shall be certified in accordance with UL Standard 1995/CSA C22.2 No. 236, Safety Standard for Heating and Cooling Equipment.

C. Unit and refrigeration system shall comply with ASHRAE 15, Safety Standard for Mechanical Refrigeration.

D. Unit shall be certified in accordance with ANSI Z21.47b/CSA 2.3b and ANSI Z83.8/CSA 2.6, Safety Standard Gas-Fired Furnaces.

E. Unit Seasonal Energy Efficiency Ratio (SEER) shall be equal to or greater than listed on the equipment schedule to achieve LEED energy points as designed.

F. Unit shall be safety certified by ETL and ETL US listed. Unit nameplate shall include the ETL/ETL Canada label.

G. Unit shall be approved for use in and outside High Velocity Hurricane Zones (HVHZ) by the Florida Building Code (FL# 15031), when using the required steel rooftop curb and attachment methods. Maximum allowable lateral wind pressure is +100psf/-100psf. Maximum allowable uplift is +50psf/-50psf. Positive and negative required design pressures calculated for use with this system shall be determined by others on a job specific basis, in accordance with the governing code. Site specific pressures shall be less than or equal to the listed positive or negative allowable lateral wind design pressure and allowable uplift values for the product.

H. Provide seismic restraints. Seismic provisions for packaged rooftop air conditioning units shall be determined with a factory-supplied curb.

1.03 SUBMITTALS

A. Product Data: Literature shall be provided that indicates dimensions, operating and shipping weights, capacities, ratings, fan performance, filter information, factory supplied accessories, electrical characteristics and connection requirements. Installation, Operation, and Maintenance manual with startup requirements shall be provided.

B. Shop Drawings: Unit drawings shall be provided that indicate assembly, unit dimensions, construction details, clearances and connection details. Computer generated fan curves for each fan shall be submitted with specific design operation point noted. Wiring diagram shall be provided with details for both power and control systems and differentiate between factory installed and field installed wiring.

1.04 DELIVERY, STORAGE, AND HANDLING

A. Unit shall be shipped with doors screwed shut and outside air hood closed to prevent damage during transport and thereafter while in storage awaiting installation.

B. Follow Installation, Operation, and Maintenance manual instructions for rigging, moving, and unloading the unit at its final location.

C. Unit shall be stored in a clean, dry place protected from construction traffic in accordance with the Installation, Operation, and Maintenance manual.

1.05 WARRANTY

A. Provide one-year comprehensive warranty as defined by the General and Supplemental Conditions and as described elsewhere in Divisions 01 and 23.

B. Special Warranty: Manufacturer agrees to repair or replace components of RTUs that fail in materials or workmanship within specified warranty period.

1. Warranty Period for Compressors: Manufacturer's standard, but not less than 10 years from date of Substantial Completion.

2. Warranty Period for Gas Furnace Heat Exchangers: Manufacturer's standard, but not less than 10 years from date of Substantial Completion.

PART 2 - PRODUCTS

2.01 MANUFACTURER

A. Products shall be provided by the following manufacturers:

1. Carrier (basis of design)

2. York

3. Lennox

4. Trane

5. Substitute equipment will require prior approval for this project.

2.02 ROOFTOP UNITS

A. General Description

1. Packaged rooftop unit shall include compressors, evaporator coils, filters, supply fans, return fans, dampers, air-cooled condenser coils, condenser fans, gas heaters, and limited unit controls.

2. Unit shall be factory assembled and tested, including leak testing of the DX coils, pressure testing of the refrigeration circuit, and run testing of the completed unit. Run test report shall be supplied with the unit in the service compartment's literature pocket.

3. Unit shall have decals and tags to indicate lifting and rigging, service areas and caution areas for safety and to assist service personnel.

4. Unit components shall be labeled, including refrigeration system components and electrical and controls components.

5. Sound power levels (dB) shall be shown on the unit ratings sheet.

6. Installation, Operation, and Maintenance manual shall be supplied within the unit.

7. Laminated color-coded wiring diagram shall match factory installed wiring and shall be affixed to the interior of the control compartment's hinged access door.

8. Unit nameplate shall be provided in two locations on the unit, affixed to the exterior of the unit and affixed to the interior of the control compartment's hinged access door.

B. Construction

1. All cabinet walls, access doors, and roof shall be fabricated of double wall, impact resistant, rigid polyurethane foam panels.

2. Unit insulation shall have a minimum thermal resistance R-value of 8. Foam insulation shall have a minimum density of 1 pounds/cubic foot and shall be tested in accordance with NFPA flame spread and smoke generation.

3. Unit construction shall be galvanized steel.

4. Unit shall be designed to reduce air leakage and infiltration through the cabinet. Cabinet leakage shall not exceed 2% of total airflow when tested at 3 times the minimum external static pressure provided in AHRI Standard 340/360. Continuous sealing shall be included between panels and between access doors and openings to reduce air leakage. Piping and electrical conduit through cabinet panels shall include sealing to prevent air leakage.

5. Access to filters, dampers, cooling coils, heaters, compressors, and electrical and controls components shall be through hinged access doors with quarter turn handles.

6. Exterior paint finish shall be capable of withstanding at least 500 hours, with no visible corrosive effects, when tested in a salt spray and fog atmosphere in accordance with ASTM B 117-95 test procedure.

7. Units with cooling coils shall include non-corrosive condensate drain pans.

8. Unit base pan shall be provided with 1/2 inch thick foam insulation.

9. Unit shall include factory installed condenser coil guards on the face of the condenser coil.

C. Electrical

1. Unit shall have a 20kAIC SCCR.

2. Unit shall be provided with factory installed and factory wired, non-fused disconnect switch.

3. Unit shall be provided with phase monitor.

D. Fans

1. Aluminum or painted-steel wheels, and galvanized- or painted-steel fan scrolls

2. Unit shall include belt driven, unhoused, backward curved, plenum fans.

3. Belt-Driven Fans: Motors shall be installed on an adjustable fan base resiliently mounted in the casing.

4. Blowers and motors shall be dynamically balance and mounted on rubber isolators.

5. Motors shall be premium efficiency ODP with ball bearings rated for 200,000 hours service with external lubrication points.

6. Variable frequency drives shall be factory wired and mounted in the unit.

E. Cooling Coils

1. Evaporator Coils
   a. Coils shall be designed for use with R-410A refrigerant and constructed of copper tubes with aluminum fins mechanically bonded to the tubes and galvanized steel end casings.
   b. Coils shall be standard capacity.
   c. Coils shall leak tested.
   d. Coils shall be furnished with factory installed expansion valves.

F. Refrigeration System

1. Unit shall be factory charged with R-410A refrigerant.

2. Compressors shall be scroll type with thermal overload protection and carry a 5 year non-prorated warranty, from the date of original equipment shipment from the factory.

3. Compressors shall be mounted in an isolated service compartment which can be accessed without affecting unit operation.

4. Compressors shall be isolated from the base pan with the compressor manufacturer's recommended rubber vibration isolators, to reduce any transmission of noise from the compressors into the building area.

5. Each refrigeration circuit shall be equipped with expansion valve type refrigerant flow control.

6. Each refrigeration circuit shall be equipped with automatic reset low pressure and manual reset high pressure refrigerant safety controls, Schrader-type service fittings on both the high pressure and low pressure sides and a factory installed replaceable core liquid line filter driers.

7. Unit shall include a variable capacity scroll compressor on the lead refrigeration circuit which shall be capable of modulation from 10-100% of its capacity.

8. Each capacity stage shall be equipped with a 5 minute off delay timer to prevent compressor short cycling.

9. Each additional capacity stage shall be equipped with an adjustable, 20 second delay timer to prevent multiple capacity stages from starting all at once.

10. Unit shall be provided with an adjustable compressor lockout.

11. Each refrigeration circuit shall be provided with an adjustable temperature sensor freeze stat which shuts down the cooling circuits when the evaporator coil tubing falls below the setpoint.

G. Condensers

1. Air-Cooled Condenser
   a. Condenser fans shall be a vertical discharge, axial flow, direct drive fans.
   b. Coils shall be designed for use with R-410A refrigerant. Coils shall be multi-pass and fabricated from aluminum microchannel tubes.
   c. Coils shall be designed for a minimum of 10°F of refrigerant sub-cooling.
   d. Coils shall be hydrogen or helium leak tested.
   e. Condenser fans shall be VFD driven variable speed for condenser head pressure control. Factory provided and factory programmed VFDs shall continuously modulate the fan air flow to maintain head pressure at

acceptable levels. Cooling operation shall be allowed down to 35°F with adjustable compressor lockout.

H. Gas Heating

1. Heat exchanger shall be of the tubular-section type constructed of a minimum of 20 gage steel coated with a nominal 1.2 mil aluminum-silicone alloy for corrosion resistance.

2. Burners shall be of the in-shot type constructed of aluminum-coated steel.

3. Burners shall incorporate orifices for rated heat output up to 2000 ft (610 m) elevation. Additional accessory kits may be required for applications above 2000 ft (610 m) elevation, depending on local gas supply conditions.

4. Each heat exchanger tube shall contain multiple dimples for increased heating effectiveness.

5. Furnace shall include a gas ignition system consisting of an electronic igniter to a pilot system, which will be continuous when the heater is operating, but will shut off the pilot when heating is not required.

6. Unit shall include a single gas connection and have gas supply piping entrances in the unit base for through-the-curb gas piping and in the outside cabinet wall for across the roof gas piping.

7. Two Stage Natural Gas Furnace

I. Filters

1. Unit shall include filters with an ASHRAE MERV rating of 13.

2. Unit shall include 1-inch aluminum mesh pre filters upstream of the outside air opening.

3. Unit shall include a clogged filter switch.

4. Unit shall include a Magnehelic gauge mounted in the controls compartment.

J. Outside Air/Economizer

1. Unit shall include 0-100% economizer consisting of a motor operated outside air damper and return air damper assembly constructed of extruded aluminum, hollow core, airfoil blades with rubber edge seals and aluminum end seals. Low leakage dampers shall be Class 2 AMCA certified, in accordance with AMCA Standard 511. Damper assembly shall be controlled by a spring return DDC actuator. Unit shall include outside air opening bird screen, outside air hood, and barometric relief dampers.

K. Thermostat and Controller:

1. Controller shall have volatile-memory backup.

2. Safety Control Operation:
   a. Smoke Detectors: Stop fan and close outdoor-air damper if smoke is detected. Provide additional contacts for alarm interface to fire alarm control panel.
   b. Firestats: Stop fan and close outdoor-air damper if air greater than 130 deg F enters unit. Provide additional contacts for alarm interface to fire alarm control panel.
   c. Fire Alarm Control Panel Interface: Provide control interface to coordinate with operating sequence described in Addressable Fire-Alarm Systems.
   d. Low-Discharge Temperature: Stop fan and close outdoor-air damper if supply air temperature is less than 40 deg F.
   e. Defrost Control for Condenser Coil: Pressure differential switch to initiate defrost sequence.

3. Scheduled Operation: Occupied and unoccupied periods on 7-day programmable thermostat.

4. Unoccupied Period:
   a. Heating Setback: Plus 10 deg F.
   b. Cooling Setback: System off.
   c. Override Operation: Two hours.

5. Supply Fan Operation:
   a. Occupied Periods: Run fan continuously.
   b. Unoccupied Periods: Cycle fan to maintain setback temperature.

6. Refrigerant Circuit Operation:
   a. Occupied Periods: Cycle or stage compressors, match compressor output to cooling load to maintain discharge temperature. Cycle condenser fans to maintain maximum hot-gas pressure. Operate low-ambient control kit to maintain minimum hot-gas pressure.
   b. Unoccupied Periods: Cycle compressors and condenser fans for heating to maintain setback temperature.

7. Gas Furnace Operation:
   a. Occupied Periods: stage heating burner to maintain temperature setpoint.
   b. Unoccupied Periods: Cycle burner to maintain setback temperature.

8. Economizer Outdoor-Air Damper Operation:
   a. Morning warm up, cool down and building outdoor air flush cycles.
   b. Occupied Periods: Open to 10 percent fixed minimum intake, and adjustable upto maximum 100 percent of the fan capacity. Controller shall permit air-side economizer operation when outdoor air is less than 60 deg F (adjustable). Use mixed-air temperature and select between outdoor-air and return-air enthalpy to adjust mixing dampers. Start relief-air sequence. During economizer cycle operation, lock out cooling.

c. Unoccupied Periods: Close outdoor-air damper and open return-air damper.

L. Accessories

1. Unit shall be provided with a safety shutdown terminal block for field installation of a smoke detector which shuts off the unit's control circuit.

2. Low-ambient kit using staged condenser fans for operation down to 35 deg F.

3. Hail guards of galvanized steel, painted to match casing.

4. Outdoor-air intake weather hood.

5. Oil separator.

2.03 CURBS

A. Roof curbs with vibration isolators and wind or seismic restraint

1. Curb Insulation and Adhesive: Comply with NFPA 90A or NFPA 90B.
   a. Materials: ASTM C 1071, Type I or II.
   b. Thickness: 1 inch .

2. Application: Factory applied with adhesive and mechanical fasteners to the internal surface of curb.
   a. Liner Adhesive: Comply with ASTM C 916, Type I.
   b. Mechanical Fasteners: Galvanized steel, suitable for adhesive attachment, mechanical attachment, or welding attachment to duct without damaging liner when applied as recommended by manufacturer and without causing leakage in cabinet.
   c. Liner materials applied in this location shall have airstream surface coated with a temperature-resistant coating or faced with a plain or coated fibrous mat or fabric depending on service air velocity.
   d. Liner Adhesive: Comply with ASTM C 916, Type I.

B. Curb Dimensions: Height of 14 inches.

PART 3 - EXECUTION

3.01 INSTALLATION, OPERATION, AND MAINTENANCE

A. Installation, Operation, and Maintenance manual shall be supplied with the unit.

B. Installing contractor shall install unit, including field installed components, in accordance with Installation, Operation, and Maintenance manual instructions.

C. Start up and maintenance requirements shall be complied with to ensure safe and correct operation of the unit.

D. Provide training to the Owner's maintenance staff regarding operation, maintenance, and repair of the units.

E. Examine substrates, areas, and conditions, with Installer present, for compliance with requirements for installation tolerances and other conditions affecting performance of RTUs.

F. Examine roughing-in for RTUs to verify actual locations of piping and duct connections before equipment installation.

G. Examine roofs for suitable conditions where RTUs will be installed.

H. Proceed with installation only after unsatisfactory conditions have been corrected.

3.02 EXAMINATION

A. Examine substrates, areas, and conditions, with Installer present, for compliance with requirements for installation tolerances and other conditions affecting performance of RTUs.

B. Examine roughing-in for RTUs to verify actual locations of piping and duct connections before equipment installation.

C. Examine roofs for suitable conditions where RTUs will be installed.

D. Proceed with installation only after unsatisfactory conditions have been corrected.

3.03 INSTALLATION

A. Roof Curb: Install on roof structure or concrete base, level and secure, according to AHRI Guideline B. Install RTUs on curbs and coordinate roof penetrations and flashing with roof construction specified in Section 077200 "Roof Accessories." Secure RTUs to upper curb rail, and secure curb base to roof framing or concrete base with anchor bolts.

B. Unit Support: Install unit level on structural curbs. Coordinate wall penetrations and flashing with wall construction. Secure RTUs to structural support with anchor bolts.

3.04 CONNECTIONS

A. Install condensate drain, minimum connection size, with trap and indirect connection to nearest roof drain or area drain.

B. Install piping adjacent to RTUs to allow service and maintenance.

1. Gas Piping: Comply with applicable requirements in Section 231123 "Facility Natural-Gas Piping." Connect gas piping to burner, full size of gas train inlet, and connect with union and shutoff valve with sufficient clearance for burner removal and service.

C. Duct installation requirements are specified in other HVAC Sections. Drawings indicate the general arrangement of ducts. The following are specific connection requirements:

1. Install ducts to termination at top of roof curb.

2. Remove roof decking only as required for passage of ducts. Do not cut out decking under entire roof curb.

3. Connect supply ducts to RTUs with flexible duct connectors specified in Section 233300 "Air Duct Accessories."

4. Install return-air duct continuously through roof structure.

D. Connect electrical wiring according to Section 260519 "Low-Voltage Electrical Power Conductors and Cables."

E. Ground equipment according to Section 260526 "Grounding and Bonding for Electrical Systems."

F. Install nameplate for each electrical connection, indicating electrical equipment designation and circuit number feeding connection.

3.05 FIELD QUALITY CONTROL

A. Manufacturer's Field Service: Engage a factory-authorized service representative to test and inspect components, assemblies, and equipment installations, including connections.

B. Perform the following tests and inspections with the assistance of a factory-authorized service representative:

1. After installing RTUs and after electrical circuitry has been energized, test units for compliance with requirements.

2. Inspect for and remove shipping bolts, blocks, and tie-down straps.

3. Operational Test: After electrical circuitry has been energized, start units to confirm proper motor rotation and unit operation.

4. Test and adjust controls and safeties. Replace damaged and malfunctioning controls and equipment.

C. RTU will be considered defective if it does not pass tests and inspections.

D. Prepare test and inspection reports.

3.06 3.5 STARTUP SERVICE

A. Engage a factory-authorized service representative to perform startup service.

B. Complete installation and startup checks according to manufacturer's written instructions.

1. Inspect for visible damage to unit casing.

2. Inspect for visible damage to furnace combustion chamber.

3. Inspect for visible damage to compressor, coils, and fans.

4. Inspect internal insulation.

5. Verify that labels are clearly visible.

6. Verify that clearances have been provided for servicing.

7. Verify that controls are connected and operable.

8. Verify that filters are installed.

9. Clean condenser coil and inspect for construction debris.

10. Clean furnace flue and inspect for construction debris.

11. Connect and purge gas line.

12. Remove packing from vibration isolators.

13. Verify lubrication on fan and motor bearings.

14. Inspect fan-wheel rotation for movement in correct direction without vibration and binding.

15. Adjust fan belts to proper alignment and tension.

16. Start unit according to manufacturer's written instructions.
    a. Start refrigeration system.
    b. Do not operate below recommended low-ambient temperature.
    c. Complete startup sheets and attach copy with Contractor's startup report.

17. Inspect and record performance of interlocks and protective devices; verify sequences.

18. Operate unit for an initial period as recommended or required by manufacturer.

19. Perform the following operations for both minimum and maximum firing. Adjust burner for peak efficiency.
    a. Measure gas pressure on manifold.
    b. Inspect operation of power vents.
    c. Measure combustion-air temperature at inlet to combustion chamber.
    d. Measure flue-gas temperature at furnace discharge.

e. Perform flue-gas analysis. Measure and record flue-gas carbon dioxide and oxygen concentration.

f. Measure supply-air temperature and volume when burner is at maximum firing rate and when burner is off. Calculate useful heat to supply air.

20. Calibrate thermostats.

21. Adjust and inspect high-temperature limits.

22. Inspect outdoor-air dampers for proper stroke and interlock with return-air dampers.

23. Start refrigeration system and measure and record the following when ambient is a minimum of 15 deg F (8 deg C) above return-air temperature:

a. Coil leaving-air, dry- and wet-bulb temperatures.

b. Coil entering-air, dry- and wet-bulb temperatures.

c. Outdoor-air, dry-bulb temperature.

d. Outdoor-air-coil, discharge-air, dry-bulb temperature.

24. Inspect controls for correct sequencing of heating, mixing dampers, refrigeration, and normal and emergency shutdown.

25. Measure and record the following minimum and maximum airflows. Plot fan volumes on fan curve.

a. Supply-air volume.

b. Return-air volume.

c. Relief-air volume.

d. Outdoor-air intake volume.

26. Simulate maximum cooling demand and inspect the following:

a. Compressor refrigerant suction and hot-gas pressures.

b. Short circuiting of air through condenser coil or from condenser fans to outdoor-air intake.

27. Verify operation of remote panel including pilot-light operation and failure modes. Inspect the following:

a. High-temperature limit on gas-fired heat exchanger.

b. Low-temperature safety operation.

c. Filter high-pressure differential alarm.

d. Economizer to minimum outdoor-air changeover.

e. Relief-air fan operation.

f. Smoke and firestat alarms.

28. After startup and performance testing and prior to Substantial Completion, replace existing filters with new filters.

3.07 3.6 CLEANING AND ADJUSTING

A. After completing system installation and testing, adjusting, and balancing RTU and air-distribution systems, clean filter housings and install new filters.

3.08 DEMONSTRATION

A. Engage a factory-authorized service representative to train Owner's maintenance personnel to adjust, operate, and maintain RTUs.

END OF SECTION

23 72 00

THIS PAGE IS BLANK

SECTION 26 05 00

BASIC ELECTRICAL MATERIALS AND METHODS GENERAL

PART 1: GENERAL

1.01 RELATED DOCUMENTS

A. Drawings and general provisions of the Contract, including General and Supplementary Conditions and Division 1 Specification Sections, apply to this Section.

1.02 SUMMARY

A. This Section includes the following:

1. Concrete equipment bases.
2. Electrical demolition.
3. Cutting and patching for electrical construction.
4. Touchup painting.

1.03 SUBMITTALS

B. Field Test Reports: Indicate and interpret test results for compliance with performance requirements.

1.04 QUALITY ASSURANCE

A. Electrical Components, Devices, and Accessories: Listed and labeled as defined in NFPA 70, Article 100, by a testing agency acceptable to authorities having jurisdiction, and marked for intended use.

B. Comply with NFPA 70.

1.05 COORDINATION

A. Coordinate chases, slots, inserts, sleeves, and openings with general construction work and arrange in building structure during progress of construction to facilitate the electrical installations that follow.

1. Set inserts and sleeves in poured-in-place concrete, masonry work, and other structural components as they are constructed.

B. Sequence, coordinate, and integrate installing electrical materials and equipment for efficient flow of the Work. Coordinate installing large equipment requiring positioning before closing in the building.

C. Coordinate electrical service connections to components furnished by utility companies.

1. Coordinate installation and connection of exterior underground and overhead utilities and services, including provision for electricity-metering components.

2. Comply with requirements of authorities having jurisdiction and of utility company providing electrical power and other services.

D. Coordinate location of access panels and doors for electrical items that are concealed by finished surfaces. Access doors and panels are specified in Division 8 Section "Access Doors."

E. Where electrical identification devices are applied to field-finished surfaces, coordinate installation of identification devices with completion of finished surface.

F. Where electrical identification markings and devices will be concealed by acoustical ceilings and similar finishes, coordinate installation of these items before ceiling installation.

G. Electrical devices and boxes are indicated on Drawings in approximate locations unless dimensioned. Adjust box or device location up to 10 feet, if required to accommodate intended purpose or owner request, with no additional cost to contract.

PART 2: PRODUCTS

2.01 EQUIPMENT FOR ELECTRICITY METERING BY OWNER

A. Meter: Electronic kilowatt-hour measuring to record electricity used.

B. Meter: Electronic kilowatt-hour/demand measuring to record electricity used and highest peak demand over a time period according to electric utility. Meter is designed for use on the type and rating of circuit indicated for its application.

1. Kilowatt-Hour Display: Digital liquid crystal.

2. Kilowatt-Demand Display: Digital, liquid-crystal type to register highest peak demand.

3. Enclosure: NEMA 250, Type 1, minimum, with hasp for padlocking or sealing.

4. Memory Backup: Self-contained to maintain memory throughout power outages of 72 hours, minimum.

5. Sensors: Current-sensing type, with current or voltage output, selected for optimum range and accuracy for the ratings of the circuits indicated for this application.

a. Type: Split or Solid core.

6. Accuracy: Nationally recognized testing laboratory certified to meet ANSI C12.1 specifications.

7. Demand Signal Communication Interface: Match signal to building automation system input that conveys data on instantaneous/integrated demand level measured by meter used for load switching to control demand.

C. Current-Transformer Cabinets: Listed or recommended by metering equipment manufacturer for use with sensors indicated.

D. Available Metering Equipment Manufacturers: Subject to compliance with requirements, manufacturers offering products that may be incorporated into the Work include, but are not limited to, the following:

E. Metering Equipment Manufacturers: Subject to compliance with requirements, provide products by one of the following or equals as reviewed by engineer:

1. E-MON Corporation.

2. National Meter Industries, Inc.

3. Osaki Meter Sales, Inc.

2.02 CONCRETE BASES

A. Concrete Forms and Reinforcement Materials: As specified in Division 3 Section "Cast-in-Place Concrete."

B. Concrete: 3000-psi (20.7-MPa), 28-day compressive strength as specified in Division 3 Section "Cast-in-Place Concrete."

2.03 TOUCHUP PAINT

A. For Equipment: Equipment manufacturer's paint selected to match installed equipment finish.

B. Galvanized Surfaces: Zinc-rich paint recommended by item manufacturer.

PART 3: EXECUTION

3.01 ELECTRICAL EQUIPMENT INSTALLATION

A. Headroom Maintenance: If mounting heights or other location criteria are not indicated, arrange and install components and equipment to provide the maximum possible headroom.

B. Materials and Components: Install level, plumb, and parallel and perpendicular to other building systems and components, unless otherwise indicated.

C. Equipment: Install to facilitate service, maintenance, and repair or replacement of components. Connect for ease of disconnecting, with minimum interference with other installations.

D. Right of Way: Give to raceways and piping systems installed at a required slope.

3.02 FIRESTOPPING

A. Apply firestopping to cable and raceway penetrations of fire-rated floor and wall assemblies to achieve fire-resistance rating of the assembly. Firestopping materials and installation requirements are specified in Division 7 Section "Firestopping."

3.03 CONCRETE BASES

A. Construct concrete bases of dimensions indicated, but not less than 4 inches (100 mm) larger, in both directions, than supported unit. Follow supported equipment manufacturer's anchorage recommendations and setting templates for anchor-bolt and tie locations, unless otherwise indicated. Use 3000-psi (20.7-MPa), 28-day compressive-strength concrete and reinforcement as specified in Division 3 Section "Cast-in-Place Concrete."

B. Provide concrete bases for all exterior pole light fixtures with a minimum dimension of: 24" diameter; extend base 48" below grade; extend base 6" above grade in grass areas and 24" above grade in parking lot areas. Coordinate final base dimensions and requirements with manufacturer recommendations. Provide grounding per latest NEC requirements.

3.04 DEMOLITION

A. Protect existing electrical equipment and installations indicated to remain. If damaged or disturbed in the course of the Work, remove damaged portions and install new products of equal capacity, quality, and functionality.

B. Accessible Work: Remove exposed electrical equipment and installations, indicated to be demolished, in their entirety.

C. Abandoned Work: Cut and remove buried raceway and wiring, indicated to be abandoned in place, 2 inches (50 mm) below the surface of adjacent construction. Cap raceways and patch surface to match existing finish.

D. Remove demolished material from Project site.

E. Remove, store, clean, reinstall, reconnect, and make operational components indicated for relocation.

3.05 CUTTING AND PATCHING

A. Cut, channel, chase, and drill floors, walls, partitions, ceilings, and other surfaces required to permit electrical installations. Perform cutting by skilled mechanics of trades involved.

B. Repair and refinish disturbed finish materials and other surfaces to match adjacent undisturbed surfaces. Install new fireproofing where existing firestopping has been disturbed. Repair and refinish materials and other surfaces by skilled mechanics of trades involved.

3.06 FIELD QUALITY CONTROL

A. Inspect installed components for damage and faulty work, including the following:

1. Electricity-metering components.

2. Concrete bases.

3. Electrical demolition.

4. Cutting and patching for electrical construction.

5. Touchup painting.

B. Test Owner's electricity-metering installation for proper operation, accuracy, and usability of output data.

1. Connect a load of known kW rating, 1.5 kW minimum, to a circuit supplied by the metered feeder.

2. Turn off circuits supplied by the metered feeder and secure them in the "off" condition.

3. Run the test load continuously for eight hours, minimum, or longer to obtain a measurable meter indication. Use a test load placement and setting that ensure continuous, safe operation.

4. Check and record meter reading at end of test period and compare with actual electricity used based on test load rating, duration of test, and sample measurements of supply voltage at the test load connection. Record test results.

5. Repair or replace malfunctioning metering equipment or correct test setup; then retest. Repeat for each meter in installation until proper operation of entire system is verified.

3.07 REFINISHING AND TOUCHUP PAINTING

A. Refinish and touch up paint. Paint materials and application requirements are specified in Division 9 Section "Painting."

1. Clean damaged and disturbed areas and apply primer, intermediate, and finish coats to suit the degree of damage at each location.

2. Follow paint manufacturer's written instructions for surface preparation and for timing and application of successive coats.

3. Repair damage to galvanized finishes with zinc-rich paint recommended by manufacturer.

4. Repair damage to PVC or paint finishes with matching touchup coating recommended by manufacturer.

3.08 CLEANING AND PROTECTION

A. On completion of installation, including outlets, fittings, and devices, inspect exposed finish. Remove burrs, dirt, paint spots, and construction debris.

B. Protect equipment and installations and maintain conditions to ensure that coatings, finishes, and cabinets are without damage or deterioration at time of Substantial Completion.

END OF SECTION

26 05 00

SECTION 26 05 19

LOW-VOLTAGE ELECTRICAL POWER CONDUCTORS AND CABLES

PART 1: GENERAL

1.01 GENERAL

A. Drawings and general provisions of the Contract, including General and Supplementary Conditions and Division 01 Specification Sections, apply to this Section.

1.02 SUMMARY

B. Section Includes:

1. Copper building wire rated 600 V or less.
2. Aluminum building wire rated 600 V or less.
3. Metal-clad cable, Type MC, rated 600 V or less.

1.03 ACTION SUBMITTALS

A. Product Data: For each type of product.

1.04 INFORMATIONAL SUBMITTALS

B. Field quality-control reports.

PART 2: PRODUCTS

2.01 BUILDING WIRES AND CABLES

A. UL listed building wires and cables with conductor material, insulation type, cable construction, and rating as specified in Part 3 "Applications" Article.

B. Rubber Insulation: Comply with NEMA WC 3.

C. Thermoplastic Insulation: Comply with NEMA WC 5.

D. Cross-Linked Polyethylene Insulation: Comply with NEMA WC 7.

E. Ethylene Propylene Rubber Insulation: Comply with NEMA WC 8.

F. Conductor Material:

1. Conductor sizes identified by a conductor size of less than 2/0, must use Copper material. Conductor sizes identified a conductor size of 2/0 larger may be Copper or Aluminum material unless type of conductor materials is specifically indicated, or specified, or required by equipment manufacturer.

2. Conductor sizes identified by gauge size (AWG or kcmil) on documents without a conductor material being stated, then the size is based on copper, unless indicated otherwise. Aluminum conductors of equal amperage may be utilized if equivalent amperage is listed in the Feeder Schedule on the drawings.

3. Aluminum Conductors:
   a. Aluminum conductors shall be AA-8000 Series electrical grade aluminum alloy conductor material recognized by The Aluminum Association.
   b. If aluminum conductors are used the Contractor shall be responsible for increasing conduit and pull box sizes to accommodate larger size aluminum conductors in accordance with NFPA 70; ensuring that pulling tension rating of aluminum conductor is sufficient; providing panelboards and motor control centers that are UL listed for use with aluminum, and so labeled; relocating equipment, modifying equipment terminations, resizing equipment; and resolving problems that are direct results of providing aluminum conductors in lieu of copper. See Feeder Schedule on the single line diagram drawings.

4. Equipment Manufacturer Requirements:
   a. When manufacturer’s equipment requires copper conductors at the terminations or requires copper conductors to be provided between components of equipment, provide copper conductors or splices, splice boxes, and other work required to satisfy manufacturer’s requirements.

G. Solid conductor for 10 AWG and smaller; stranded conductor for larger than 10 AWG. Stranded conductor for controls and connections subject to vibration.

2.02 CONNECTORS AND SPLICES

A. UL-listed factory-fabricated wiring connectors of size, ampacity rating, material, and type and class for application and for service indicated. Select to comply with Project's installation requirements and as specified in Part 3 "Applications" Article.

2.03 COPPER BUILDING WIRE

A. Description: Flexible, insulated and uninsulated, drawn copper current-carrying conductor with an overall insulation layer or jacket, or both, rated 600 V or less.

B. Standards:

1. Listed and labeled as defined in NFPA 70, by a qualified testing agency, and marked for intended location and use.

2. Conductor and Cable Marking: Comply with wire and cable marking according to UL's "Wire and Cable Marking and Application Guide."

C. Conductors: Copper, complying with ASTM B 3 for bare annealed copper and with ASTM B 8 for stranded conductors.

D. Conductor Insulation:

1. Type NM: Comply with UL 83 and UL 719.

2. Type RHW-2: Comply with UL 44.

3. Type USE-2 and Type SE: Comply with UL 854.

4. Type THHN and Type THWN-2: Comply with UL 83.

5. Type THW and Type THW-2: Comply with NEMA WC-70/ICEA S-95-658 and UL 83.

6. Type XHHW-2: Comply with UL 44.

2.04 ALUMINUM BUILDING WIRE

A. Description: Flexible, insulated and uninsulated, drawn aluminum current-carrying conductor with an overall insulation layer or jacket, or both, rated 600 V or less.

B. Standards:

1. Listed and labeled as defined in NFPA 70, by a qualified testing agency, and marked for intended location and use.

2. RoHS compliant.

3. Conductor and Cable Marking: Comply with wire and cable marking according to UL's "Wire and Cable Marking and Application Guide."

C. Conductors: Aluminum, complying with ASTM B 800 and ASTM B 801.

D. Conductor Insulation:

1. Type USE-2 and Type SE: Comply with UL 854.

2. Type Type THWN-2: Comply with UL 83.

3. Type XHHW-2: Comply with UL 44.

2.05 METAL-CLAD CABLE, TYPE MC

A. Description: A factory assembly of one or more current-carrying insulated conductors in an overall metallic sheath.

B. Standards:

1. Listed and labeled as defined in NFPA 70, by a qualified testing agency, and marked for intended location and use.

2. Comply with UL 1569.

C. Circuits:

1. Single circuit and multi-circuit with color-coded conductors.

2. Power-Limited Fire-Alarm Circuits: Comply with UL 1424.

D. Conductors: Copper, complying with ASTM B 3 for bare annealed copper and with ASTM B 8 for stranded conductors.

E. Ground Conductor: Insulated.

F. Conductor Insulation:

1. Type TFN/THHN/THWN-2: Comply with UL 83.

2. Type XHHW-2: Comply with UL 44.

G. Armor: Steel, interlocked.

H. Jacket: PVC applied over armor.

2.06 CONNECTORS AND SPLICES

A. Description: Factory-fabricated connectors, splices, and lugs of size, ampacity rating, material, type, and class for application and service indicated; listed and labeled as defined in NFPA 70, by a qualified testing agency, and marked for intended location and use.

B. Jacketed Cable Connectors: For steel and aluminum jacketed cables, zinc die-cast with set screws, designed to connect conductors specified in this Section.

PART 3: EXECUTION

3.01 CONDUCTOR APPLICATIONS

A. Service Entrance: Type RHW or THWN insulated conductor, in raceway. Copper or Aluminum per Feeder Schedule on drawings

B. Feeders: Type THHN/THWN insulated conductor, in raceway. Copper or Aluminum per Feeder Schedule on drawings

C. Branch Circuits: Type THHN/THWN, copper conductors in raceway.

1. Solid for No. 12 AWG and smaller; stranded for No.10 AWG and larger.

2. Conductors for branch circuits shall be sized to prevent excessive voltage drop.

3. Conductors on 20 amp branch circuits, between the overcurrent protection device and the farthest outlet served, shall not exceed 75 feet for #12 AWG copper, or 150 feet for #10 AWG copper, measured along the branch circuit conductors.

4. Branch circuits exceeding 150 feet from the overcurrent device to the farthest outlet served measured along the branch circuit conductors, shall be sized so that the voltage drop does not exceed five percent (3%).

D. PV Circuits: Copper Solid for No. 12 AWG and smaller; stranded for No.10 AWG and larger.

3.02 CONDUCTOR INSULATION AND MULTICONDUCTOR CABLE APPLICATIONS AND WIRING METHODS

A. Service Entrance: Type THHN/THWN-2, single conductors in raceway.

B. Exposed Feeders: Type THHN/THWN-2, single conductors in raceway.

C. Feeders Concealed in Ceilings, Walls, Partitions, and Crawlspaces: Type THHN/THWN-2, single conductors in raceway.

D. Cord Drops and Portable Appliance Connections: Type SO, hard service cord with stainless-steel, wire-mesh, strain relief device at terminations to suit application.

3.03 INSTALLATION OF CONDUCTORS AND CABLES

A. Conceal cables in finished walls, ceilings, and floors unless otherwise indicated.

B. Complete raceway installation between conductor and cable termination points according to Section 260533 "Raceways and Boxes for Electrical Systems" prior to pulling conductors and cables.

C. Use manufacturer-approved pulling compound or lubricant where necessary; compound used must not deteriorate conductor or insulation. Do not exceed manufacturer's recommended maximum pulling tensions and sidewall pressure values.

D. Use pulling means, including fish tape, cable, rope, and basket-weave wire/cable grips, that will not damage cables or raceway.

E. Install exposed cables parallel and perpendicular to surfaces of exposed structural members, and follow surface contours where possible.

F. Support cables according to Section 260529 "Hangers and Supports for Electrical Systems."

G. Complete cable tray systems installation according to Section 260536 "Cable Trays for Electrical Systems" prior to installing conductors and cables.

H. CONNECTIONS

1. Tighten electrical connectors and terminals according to manufacturer's published torque-tightening values. If manufacturer's torque values are not indicated, use those specified in UL 486A-486B.

2. Make splices, terminations, and taps that are compatible with conductor material[and that possess equivalent or better mechanical strength and insulation ratings than unspliced conductors].

3. Use oxide inhibitor in each splice, termination, and tap for aluminum conductors.

4. Wiring at Outlets: Install conductor at each outlet, with at least 12 inches of slack.

5. Make splices and taps that are compatible with conductor material and that possess equivalent or better mechanical strength and insulation ratings than unspliced conductors. Comply with ANSI C119.4.

3.04 IDENTIFICATION

A. Identify and color-code conductors and cables according to Section 260553 "Identification for Electrical Systems."

B. Identify each spare conductor at each end with identity number and location of other end of conductor, and identify as spare conductor.

3.05 SLEEVE AND SLEEVE-SEAL INSTALLATION FOR ELECTRICAL PENETRATIONS

A. Install sleeves and sleeve seals at penetrations of exterior floor and wall assemblies. Comply with requirements in Section 260544 "Sleeves and Sleeve Seals for Electrical Raceways and Cabling."

3.06 FIRESTOPPING

A. Apply firestopping to electrical penetrations of fire-rated floor and wall assemblies to restore original fire-resistance rating of assembly according to Section 078413 "Penetration Firestopping."

3.07 FIELD QUALITY CONTROL

A. Tests and inspections.

1. After installing conductors and cables and before electrical circuitry has been energized, test service entrance and feeder conductors for compliance with requirements.

2. Perform each of the following visual and electrical tests:
   a. Inspect exposed sections of conductor and cable for physical damage and correct connection according to the single-line diagram.
   b. Test bolted connections for high resistance using one of the following:
      1. A low-resistance ohmmeter.
      2. Calibrated torque wrench.
      3. Thermographic survey.
   c. Inspect compression-applied connectors for correct cable match and indentation.
   d. Inspect for correct identification.
   e. Inspect cable jacket and condition.
   f. For all FEEDERS
      1. Insulation-resistance test on each conductor for ground and adjacent conductors. Apply a potential of 500-V dc for 300-V rated cable and 1000-V dc for 600-V rated cable for a one-minute duration.
      2. Continuity test on each conductor and cable.
      3. Uniform resistance of parallel conductors.

3. Initial Infrared Scanning: After Substantial Completion, but before Final Acceptance, perform an infrared scan of each splice in conductors No. 3 AWG and larger. Remove box and equipment covers so splices are accessible to portable scanner. Correct deficiencies determined during the scan.
   a. Instrument: Use an infrared scanning device designed to measure temperature or to detect significant deviations from normal values. Provide calibration record for device.
   b. Record of Infrared Scanning: Prepare a certified report that identifies switches checked and that describes scanning results. Include notation of deficiencies detected, remedial action taken, and observations after remedial action.

4. Follow-up Infrared Scanning: Perform an additional follow-up infrared scan of each switch 11 months after date of Substantial Completion.

B. Cables will be considered defective if they do not pass tests and inspections.

C. Prepare test and inspection reports to record the following:

1. Procedures used.

2. Results that comply with requirements.

3. Results that do not comply with requirements, and corrective action taken to achieve compliance with requirements.

END OF SECTION

26 05 19

26 05 26

GROUNDING AND BONDING FOR ELECTRICAL SYSTEMS

PART 1 - GENERAL

A. Drawings and general provisions of the Contract, including General and Supplementary Conditions and Division 01 Specification Sections, apply to this Section.

1.02 SUMMARY

A. Section includes grounding and bonding systems and equipment.

1.03 ACTION SUBMITTALS

A. Product Data: For each type of product indicated.

1.04 INFORMATIONAL SUBMITTALS

A. Coordination Drawings: Plans showing dimensioned locations of grounding features specified in "Field Quality Control" Article, including the following:

1. Test wells.

2. Ground rods.

B. Field quality-control reports.

PART 2 - PRODUCTS

2.01 SYSTEM DESCRIPTION

A. Electrical Components, Devices, and Accessories: Listed and labeled as defined in NFPA 70, by a qualified testing agency, and marked for intended location and application.

B. Comply with UL 467 for grounding and bonding materials and equipment.

2.02 CONDUCTORS

A. Insulated Conductors: Copper or tinned-copper wire or cable insulated for 600 V unless otherwise required by applicable Code or authorities having jurisdiction.

B. Bare Copper Conductors:

1. Solid Conductors: ASTM B 3.

2. Stranded Conductors: ASTM B 8.

3. Tinned Conductors: ASTM B 33.

4. Bonding Cable: 28 kcmil, 14 strands of No. 17 AWG conductor, 1/4 inch in diameter.

5. Bonding Conductor: No. 4 or No. 6 AWG, stranded conductor.

6. Bonding Jumper: Copper tape, braided conductors terminated with copper ferrules; 1-5/8 inches wide and 1/16 inch thick.

7. Tinned Bonding Jumper: Tinned-copper tape, braided conductors terminated with copper ferrules; 1-5/8 inches wide and 1/16 inch thick.

C. Grounding Bus: Predrilled rectangular bars of annealed copper, 1/4 by 4 inches in cross section, with 9/32-inch holes spaced 1-1/8 inches apart. Stand-off insulators for mounting shall comply with UL 891 for use in switchboards, 600 V and shall be Lexan or PVC, impulse tested at 5000 V.

2.03 CONNECTORS

A. Listed and labeled by an NRTL acceptable to authorities having jurisdiction for applications in which used and for specific types, sizes, and combinations of conductors and other items connected.

B. Welded Connectors: Exothermic-welding kits of types recommended by kit manufacturer for materials being joined and installation conditions.

C. Bus-Bar Connectors: Mechanical type, cast silicon bronze, solderless compression -type wire terminals, and long-barrel, two-bolt connection to ground bus bar.

D. Bus-Bar Connectors: Compression type, copper or copper alloy, with two wire terminals.

E. Beam Clamps: Mechanical type, terminal, ground wire access from four directions, with dual, tin-plated or silicon bronze bolts.

F. Cable-to-Cable Connectors: Compression type, copper or copper alloy.

G. Cable Tray Ground Clamp: Mechanical type, zinc-plated malleable iron.

H. Conduit Hubs: Mechanical type, terminal with threaded hub.

I. Ground Rod Clamps: Mechanical type, copper or copper alloy, terminal with hex head bolt.

J. Lay-in Lug Connector: Mechanical type, copper rated for direct burial terminal with set screw.

K. Service Post Connectors: Mechanical type, bronze alloy terminal, in short- and long-stud lengths, capable of single and double conductor connections.

L. Straps: Solid copper, cast-bronze clamp or copper lugs. Rated for 600 A.

M. U-Bolt Clamps: Mechanical type, copper or copper alloy, terminal listed for direct burial.

N. Water Pipe Clamps:

1. Mechanical type, two pieces with stainless-steel bolts.
   a. Material: Die-cast zinc alloy.
   b. Listed for direct burial.

2. U-bolt type with malleable-iron clamp and copper ground connector.

2.04 GROUNDING ELECTRODES

A. Ground Rods: Copper-clad steel; 3/4 inch by 10 feet.

B. Where noted

1. Termination: Factory-attached No. 4/0 AWG bare conductor at least 48 inches long.

2. Backfill Material: Electrode manufacturer's recommended material.

3. Ground Plates: 1/4 inch thick, hot-dip galvanized.

PART 3 - EXECUTION

3.01 APPLICATIONS

A. Conductors: Install solid conductor for No. 8 AWG and smaller, and stranded conductors for No. 6 AWG and larger unless otherwise indicated.

B. Underground Grounding Conductors: Install bare copper conductor, No. 2/0 AWG minimum.

1. Bury at least 24 inches below grade.

2. Duct-Bank Grounding Conductor: Bury 12 inches above duct bank when indicated as part of duct-bank installation.

C. Grounding Bus: Install in electrical equipment rooms, in rooms housing service equipment, and elsewhere as indicated.

1. Install bus horizontally, on insulated spacers 2 inches minimum from wall, 6 inches above finished floor unless otherwise indicated.

2. Where indicated on both sides of doorways, route bus up to top of door frame, across top of doorway, and down; connect to horizontal bus.

D. Conductor Terminations and Connections:

1. Pipe and Equipment Grounding Conductor Terminations: Bolted connectors.

2. Underground Connections: Welded connectors except at test wells and as otherwise indicated.

3. Connections to Ground Rods at Test Wells: Bolted connectors.

4. Connections to Structural Steel: Welded connectors.

3.02 GROUNDING AT THE SERVICE

A. Equipment grounding conductors and grounding electrode conductors shall be connected to the ground bus. Install a main bonding jumper between the neutral and ground buses.

3.03 GROUNDING SEPARATELY DERIVED SYSTEMS

A. Generator: Install grounding electrode(s) at the generator location. The electrode shall be connected to the equipment grounding conductor and to the frame of the generator.

3.04 GROUNDING UNDERGROUND DISTRIBUTION SYSTEM COMPONENTS

A. Comply with IEEE C2 grounding requirements.

3.05 EQUIPMENT GROUNDING

A. Install insulated equipment grounding conductors with all feeders and branch circuits.

B. Air-Duct Equipment Circuits: Install insulated equipment grounding conductor to duct-mounted electrical devices operating at 120 V and more, including air cleaners, heaters, dampers, humidifiers, and other duct electrical equipment. Bond conductor to each unit and to air duct and connected metallic piping.

C. Water Heater, Heat-Tracing, and Antifrost Heating Cables: Install a separate insulated equipment grounding conductor to each electric water heater and heat-tracing cable. Bond conductor to heater units, piping, connected equipment, and components.

D. Isolated Equipment Enclosure Circuits: For designated equipment supplied by a branch circuit or feeder, isolate equipment enclosure from supply circuit raceway with a nonmetallic raceway fitting listed for the purpose. Install fitting where raceway enters enclosure, and install a separate insulated equipment grounding conductor. Isolate conductor from raceway and from panelboard grounding terminals. Terminate at equipment grounding conductor terminal of the applicable derived system or service unless otherwise indicated.

E. Poles Supporting Outdoor Lighting Fixtures: Install a separate insulated equipment grounding conductor with branch-circuit conductors.

3.06 INSTALLATION

A. Grounding Conductors: Route along shortest and straightest paths possible unless otherwise indicated or required by Code. Avoid obstructing access or placing conductors where they may be subjected to strain, impact, or damage.

B. Ground Bonding Common with Lightning Protection System: Comply with NFPA 780 and UL 96 when interconnecting with lightning protection system. Bond electrical power system ground directly to lightning protection system grounding conductor at closest

point to electrical service grounding electrode. Use bonding conductor sized same as system grounding electrode conductor, and install in conduit.

C. Ground Rods: Drive rods until tops are 2 inches below finished floor or final grade unless otherwise indicated.

1. Interconnect ground rods with grounding electrode conductor below grade and as otherwise indicated. Make connections without exposing steel or damaging coating if any.

2. Use exothermic welds for all below-grade connections.

3. For grounding electrode system, install at least three rods spaced at least one-rod length from each other and located at least the same distance from other grounding electrodes, and connect to the service grounding electrode conductor.

D. Test Wells: Ground rod driven through drilled hole in bottom of handhole. Handholes shall be at least 12 inches deep, with cover.

1. Install at least one test well for each service unless otherwise indicated. Install at the ground rod electrically closest to service entrance. Set top of test well flush with finished grade or floor.

E. Bonding Straps and Jumpers: Install in locations accessible for inspection and maintenance except where routed through short lengths of conduit.

1. Bonding to Structure: Bond straps directly to basic structure, taking care not to penetrate any adjacent parts.

2. Bonding to Equipment Mounted on Vibration Isolation Hangers and Supports: Install bonding so vibration is not transmitted to rigidly mounted equipment.

3. Use exothermic-welded connectors for outdoor locations; if a disconnect-type connection is required, use a bolted clamp.

F. Grounding and Bonding for Piping:

1. Metal Water Service Pipe: Install insulated copper grounding conductors, in conduit, from building's main service equipment, or grounding bus, to main metal water service entrances to building. Connect grounding conductors to main metal water service pipes; use a bolted clamp connector or bolt a lug-type connector to a pipe flange by using one of the lug bolts of the flange. Where a dielectric main water fitting is installed, connect grounding conductor on street side of fitting. Bond metal grounding conductor conduit or sleeve to conductor at each end.

2. Water Meter Piping: Use braided-type bonding jumpers to electrically bypass water meters. Connect to pipe with a bolted connector.

3. Bond each aboveground portion of gas piping system downstream from equipment shutoff valve.

G. Grounding for Steel Building Structure: Install a driven ground rod at base of each corner column and at intermediate exterior columns at distances not more than 60 feet apart.

H. Concrete-Encased Grounding Electrode (Ufer Ground): Fabricate according to NFPA 70; use a minimum of 25 feet of bare copper conductor not smaller than No. 4/0 AWG.

1. If concrete foundation is less than 25 feet long, coil excess conductor within base of foundation.

2. Bond grounding conductor to reinforcing steel in at least four locations and to anchor bolts. Extend grounding conductor below grade and connect to building's grounding grid or to grounding electrode external to concrete.

I. Connections: Make connections so possibility of galvanic action or electrolysis is minimized. Select connectors, connection hardware, conductors, and connection methods so metals in direct contact are galvanically compatible.

1. Use electroplated or hot-tin-coated materials to ensure high conductivity and to make contact points closer in order of galvanic series.

2. Make connections with clean, bare metal at points of contact.

3. Make aluminum-to-steel connections with stainless-steel separators and mechanical clamps.

4. Make aluminum-to-galvanized-steel connections with tin-plated copper jumpers and mechanical clamps.

5. Coat and seal connections having dissimilar metals with inert material to prevent future penetration of moisture to contact surfaces.

3.07 FIELD QUALITY CONTROL

A. Tests and Inspections:

1. After installing grounding system but before permanent electrical circuits have been energized, test for compliance with requirements.

2. Inspect physical and mechanical condition. Verify tightness of accessible, bolted, electrical connections with a calibrated torque wrench according to manufacturer's written instructions.

3. Test completed grounding system at each location where a maximum ground-resistance level is specified, at service disconnect enclosure grounding terminal, at ground test wells, and at individual ground rods. Make tests at ground rods before any conductors are connected.

4. Measure ground resistance no fewer than two full days after last trace of precipitation and without soil being moistened by any means other than natural drainage or seepage and without chemical treatment or other artificial means of reducing natural ground resistance.

5. Perform tests by fall-of-potential method according to IEEE 81.

6. Prepare dimensioned Drawings locating each test well, ground rod and ground-rod assembly, and other grounding electrodes. Identify each by letter in alphabetical order, and key to the record of tests and observations. Include the number of rods driven and their depth at each location, and include observations of weather and other phenomena that may affect test results. Describe measures taken to improve test results.

B. Grounding system will be considered defective if it does not pass tests and inspections.

C. Prepare test and inspection reports.

D. Report measured ground resistances that exceed the following values:

1. Power and Lighting Equipment or System with Capacity of 500 kVA and Less: 10 ohms.

2. Power and Lighting Equipment or System with Capacity of 500 to 1000 kVA: 5 ohms.

3. Power and Lighting Equipment or System with Capacity More Than 1000 kVA: 3 ohms.

4. Excessive Ground Resistance: If resistance to ground exceeds specified values, notify Engineer promptly and include recommendations to reduce ground resistance

END OF SECTION

26 05 26

THIS PAGE IS BLANK

26 05 29

HANGERS AND SUPPORTS

PART 1 - GENERAL

1.01 RELATED DOCUMENTS

A. Drawings and general provisions of the Contract, including General and Supplementary Conditions and Division 01 Specification Sections, apply to this Section.

1.02 SUMMARY

A. Section Includes:

1. Steel slotted support systems.
2. Aluminum slotted support systems.
3. Nonmetallic slotted support systems.
4. Conduit and cable support devices.
5. Support for conductors in vertical conduit.
6. Structural steel for fabricated supports and restraints.
7. Mounting, anchoring, and attachment components, including powder-actuated fasteners, mechanical expansion anchors, concrete inserts, clamps, through bolts, toggle bolts, and hanger rods.
8. Fabricated metal equipment support assemblies.

1.03 ACTION SUBMITTALS

A. Product Data: For each type of product.

1. Include construction details, material descriptions, dimensions of individual components and profiles, and finishes for the following:
2. Slotted support systems, hardware, and accessories.
   a. Clamps.
   b. Hangers.
   c. Sockets.
   d. Eye nuts.
   e. Fasteners.
   f. Anchors.
   g. Saddles.

h. Brackets.

3. Include rated capacities and furnished specialties and accessories.

PART 2 - PRODUCTS

2.01 PERFORMANCE REQUIREMENTS

A. Surface-Burning Characteristics: Comply with ASTM E 84; testing by a qualified testing agency. Identify products with appropriate markings of applicable testing agency.

1. Flame Rating: Class 1.

2. Self-extinguishing according to ASTM D 635.

2.02 SUPPORT, ANCHORAGE, AND ATTACHMENT COMPONENTS

A. Steel Slotted Support Systems: Preformed steel channels and angles with minimum 13/32-inch- diameter holes at a maximum of 8 inches o.c. in at least one surface.

1. Standard: Comply with MFMA-4 factory-fabricated components for field assembly.

2. Material for Channel, Fittings, and Accessories: Galvanized steel.

3. Channel Width: Selected for applicable load criteria.

4. Metallic Coatings: Hot-dip galvanized after fabrication and applied according to MFMA-4.

5. Painted Coatings: Manufacturer's standard painted coating applied according to MFMA-4.

6. Protect finishes on exposed surfaces from damage by applying a strippable, temporary protective covering before shipping.

B. Aluminum Slotted Support Systems: Extruded-aluminum channels and angles with minimum 13/32-inch- diameter holes at a maximum of 8 inches o.c. in at least one surface.

1. Standard: Comply with MFMA-4 factory-fabricated components for field assembly.

2. Channel Material: 6063-T5 aluminum alloy.

3. Fittings and Accessories Material: 5052-H32 aluminum alloy.

4. Channel Width: Selected for applicable load criteria.

5. Nonmetallic Coatings: Manufacturer's standard PVC, polyurethane, or polyester coating applied according to MFMA-4.

6. Painted Coatings: Manufacturer's standard painted coating applied according to MFMA-4.

7. Protect finishes on exposed surfaces from damage by applying a strippable, temporary protective covering before shipping.

C. Conduit and Cable Support Devices: Steel hangers, clamps, and associated fittings, designed for types and sizes of raceway or cable to be supported.

D. Support for Conductors in Vertical Conduit: Factory-fabricated assembly consisting of threaded body and insulating wedging plug or plugs for nonarmored electrical conductors or cables in riser conduits. Plugs shall have number, size, and shape of conductor gripping pieces as required to suit individual conductors or cables supported. Body shall be made of malleable iron.

E. Structural Steel for Fabricated Supports and Restraints: ASTM A 36/A 36M steel plates, shapes, and bars; black and galvanized.

F. Mounting, Anchoring, and Attachment Components: Items for fastening electrical items or their supports to building surfaces include the following:

1. Powder-Actuated Fasteners: Threaded-steel stud, for use in hardened portland cement concrete, steel, or wood, with tension, shear, and pullout capacities appropriate for supported loads and building materials where used.

2. Confirm acceptance of use from architect and structural engineer.

3. Mechanical-Expansion Anchors: Insert-wedge-type, zinc-coated steel or stainless steel, for use in hardened portland cement concrete, with tension, shear, and pullout capacities appropriate for supported loads and building materials where used.

4. Concrete Inserts: Steel or malleable-iron, slotted support system units are similar to MSS Type 18 units and comply with MFMA-4 or MSS SP-58.

5. Clamps for Attachment to Steel Structural Elements: MSS SP-58 units are suitable for attached structural element.

6. Through Bolts: Structural type, hex head, and high strength. Comply with ASTM A 325.

7. Toggle Bolts: All-steel springhead type.

8. Hanger Rods: Threaded steel.

2.03 FABRICATED METAL EQUIPMENT SUPPORT ASSEMBLIES

A. Description: Welded or bolted structural-steel shapes, shop or field fabricated to fit dimensions of supported equipment.

B. Materials: Comply with requirements in Section 055000 "Metal Fabrications" for steel shapes and plates.

PART 3 - EXECUTION

3.01 APPLICATION

A. Comply with the following standards for application and installation requirements of hangers and supports, except where requirements on Drawings or in this Section are stricter:

1. NECA 1.

2. NECA 101

3. NECA 102.

4. NECA 105.

B. Comply with requirements in Section 078413 "Penetration Firestopping" for firestopping materials and installation for penetrations through fire-rated walls, ceilings, and assemblies.

C. Comply with requirements for raceways and boxes specified in Section 260533 "Raceways and Boxes for Electrical Systems."

D. Maximum Support Spacing and Minimum Hanger Rod Size for Raceways: Space supports for EMT, IMC, and RMC as scheduled in NECA 1, where its Table 1 lists maximum spacings that are less than those stated in NFPA 70. Minimum rod size shall be 1/4 inch in diameter.

E. Multiple Raceways or Cables: Install trapeze-type supports fabricated with steel slotted or other support system, sized so capacity can be increased by at least 25 percent in future without exceeding specified design load limits.

1. Secure raceways and cables to these supports with single-bolt conduit clamps.

F. Spring-steel clamps designed for supporting single conduits without bolts are not permitted.

3.02 SUPPORT INSTALLATION

A. Comply with NECA 1 and NECA 101 for installation requirements except as specified in this article.

B. Raceway Support Methods: Raceway support by routing through openings in structure members, are not permitted.

C. Strength of Support Assemblies: Where not indicated, select sizes of components so strength will be adequate to carry present and future static loads within specified loading

limits. Minimum static design load used for strength determination shall be weight of supported components plus 200 lb.

D. Mounting and Anchorage of Surface-Mounted Equipment and Components: Anchor and fasten electrical items and their supports to building structural elements by the following methods unless otherwise indicated by code:

1. To Wood: Fasten with lag screws or through bolts.

2. To New Concrete: Bolt to concrete inserts.

3. To Masonry: Approved toggle-type bolts on hollow masonry units and expansion anchor fasteners on solid masonry units.

4. To Existing Concrete: Expansion anchor fasteners.

5. Instead of expansion anchors, powder-actuated driven threaded studs provided with lock washers and nuts may be used in existing standard-weight concrete 4 inches thick or greater. Do not use for anchorage to lightweight-aggregate concrete or for slabs less than 4 inches thick.

6. To Steel: Welded threaded studs complying with AWS D1.1/D1.1M, with lock washers and nuts; or Beam clamps (MSS SP-58, Type 19, 21, 23, 25, or 27), complying with MSS SP-69.

7. To Light Steel: Sheet metal screws.

8. Items Mounted on Hollow Walls and Nonstructural Building Surfaces: Mount cabinets, panelboards, disconnect switches, control enclosures, pull and junction boxes, transformers, and other devices on slotted-channel racks attached to substrate.

E. Drill holes for expansion anchors in concrete at locations and to depths that avoid the need for reinforcing bars.

3.03 INSTALLATION OF FABRICATED METAL SUPPORTS

A. Comply with installation requirements in Section 055000 "Metal Fabrications" for site-fabricated metal supports.

B. Cut, fit, and place miscellaneous metal supports accurately in location, alignment, and elevation to support and anchor electrical materials and equipment.

C. Field Welding: Comply with AWS D1.1/D1.1M.

3.04 CONCRETE BASES

A. Construct concrete bases of dimensions indicated, but not less than 4 inches larger in both directions than supported unit, and so anchors will be a minimum of 10 bolt diameters from edge of the base.

B. Use 3000-psi, 28-day compressive-strength concrete. Concrete materials, reinforcement, and placement requirements are specified in Section 033000 "Cast-in-Place Concrete."

C. Anchor equipment to concrete base as follows:

1. Place and secure anchorage devices. Use supported equipment manufacturer's setting drawings, templates, diagrams, instructions, and directions furnished with items to be embedded.

2. Install anchor bolts to elevations required for proper attachment to supported equipment.

3. Install anchor bolts according to anchor-bolt manufacturer's written instructions.

3.05 PAINTING

A. Touchup: Comply with requirements in Division 09 specification for cleaning and touchup painting of field welds, bolted connections, and abraded areas of shop paint on miscellaneous metal.

1. If section is not included, then provide as follows:

a. Touchup: Clean field welds and abraded areas of shop paint. Paint exposed areas immediately after erecting hangers and supports. Use same materials as used for shop painting. Comply with SSPC-PA 1 requirements for touching up field-painted surfaces.

b. Apply paint by brush or spray to provide minimum dry film thickness of 2.0 mils.

B. Galvanized Surfaces: Clean welds, bolted connections, and abraded areas and apply galvanizing-repair paint to comply with ASTM A 780.

END OF SECTION

26 05 29

26 05 33

RACEWAYS AND BOXES FOR ELECTRICAL SYSTEMS

PART 1 - GENERAL

1.01 RELATED DOCUMENTS

A. Drawings and general provisions of the Contract, including General and Supplementary Conditions and Division 01 Specification Sections, apply to this Section.

1.02 SUMMARY

A. Section Includes:

1. Metal conduits and fittings.
2. Nonmetallic conduits and fittings.
3. Metal wireways and auxiliary gutters.
4. Nonmetal wireways and auxiliary gutters.
5. Surface raceways.
6. Boxes, enclosures, and cabinets.
7. Handholes and boxes for exterior underground cabling.

B. Related Requirements:

1. Section 078413 "Penetration Firestopping" for firestopping at conduit and box entrances.
2. Section 270528 "Pathways for Communications Systems" for conduits, wireways, surface pathways, innerduct, boxes, faceplate adapters, enclosures, cabinets, and handholes serving communications systems.

1.03 DEFINITIONS

A. ARC: Aluminum rigid conduit.

B. EMT: Electrical metallic tubing.

C. FMC: Flexible metal conduit.

D. GRC: Galvanized rigid steel conduit.

E. IMC: Intermediate metal conduit.

F. LFMC: Liquidtight flexible metal conduit.

G. RNC: Rigid nonmetallic conduit.

1.04 ACTION SUBMITTALS

A. Product Data: For surface raceways, wireways and fittings, floor boxes, hinged-cover enclosures, and cabinets.

B. Shop Drawings: For custom enclosures and cabinets. Include plans, elevations, sections, and attachment details.

1.05 INFORMATIONAL SUBMITTALS

A. Seismic Qualification Data: Certificates, for enclosures, cabinets, and conduit racks and their mounting provisions, including those for internal components, from manufacturer.

1. Basis for Certification: Indicate whether withstand certification is based on actual test of assembled components or on calculation.

2. Dimensioned Outline Drawings of Equipment Unit: Identify center of gravity and locate and describe mounting and anchorage provisions.

3. Detailed description of equipment anchorage devices on which the certification is based and their installation requirements.

4. Detailed description of conduit support devices and interconnections on which the certification is based and their installation requirements.

B. Source quality-control reports.

PART 2 - PRODUCTS

2.01 METAL CONDUITS AND FITTINGS

A. Metal Conduit:

1. Listing and Labeling: Listed and labeled as defined in NFPA 70, by a qualified testing agency, and marked for intended location and application.

2. GRC: Comply with ANSI C80.1 and UL 6.

3. ARC: Comply with ANSI C80.5 and UL 6A.

4. IMC: Comply with ANSI C80.6 and UL 1242.

5. PVC-Coated Steel Conduit: PVC-coated rigid steel conduit or IMC.
   a. Comply with NEMA RN 1.
   b. Coating Thickness: 0.040 inch, minimum.

6. EMT: Comply with ANSI C80.3 and UL 797.

7. FMC: Comply with UL 1; zinc-coated steel or aluminum.

8. LFMC: Flexible steel conduit with PVC jacket and complying with UL 360.

B. Metal Fittings:

1. Comply with NEMA FB 1 and UL 514B.

2. Listing and Labeling: Listed and labeled as defined in NFPA 70, by a qualified testing agency, and marked for intended location and application.

3. Fittings, General: Listed and labeled for type of conduit, location, and use.

4. Conduit Fittings for Hazardous (Classified) Locations: Comply with UL 1203 and NFPA 70.

5. Fittings for EMT:
   a. Material: Steel or die cast.
   b. Type: Setscrew or compression.

6. Expansion Fittings: PVC or steel to match conduit type, complying with UL 651, rated for environmental conditions where installed, and including flexible external bonding jumper.

7. Coating for Fittings for PVC-Coated Conduit: Minimum thickness of 0.040 inch, with overlapping sleeves protecting threaded joints.

C. Joint Compound for IMC, GRC, or ARC: Approved, as defined in NFPA 70, by authorities having jurisdiction for use in conduit assemblies, and compounded for use to lubricate and protect threaded conduit joints from corrosion and to enhance their conductivity.

2.02 NONMETALLIC CONDUITS AND FITTINGS

A. Nonmetallic Conduit:

1. Listing and Labeling: Nonmetallic conduit shall be listed and labeled as defined in NFPA 70, by a qualified testing agency, and marked for intended location and application.

2. Fiberglass:
   a. Comply with NEMA TC 14.
   b. Comply with UL 2515 for aboveground raceways.
   c. Comply with UL 2420 for belowground raceways.

3. ENT: Comply with NEMA TC 13 and UL 1653.

4. RNC: Type EPC-40-PVC, complying with NEMA TC 2 and UL 651 unless otherwise indicated.

5. LFNC: Comply with UL 1660.

6. Rigid HDPE: Comply with UL 651A.

7. RTRC: Comply with UL 2515A and NEMA TC 14.

B. Nonmetallic Fittings:

1. Fittings, General: Listed and labeled for type of conduit, location, and use.

2. Fittings for ENT and RNC: Comply with NEMA TC 3; match to conduit or tubing type and material.

a. Fittings for LFNC: Comply with UL 514B.

3. Solvents and Adhesives: As recommended by conduit manufacturer.

2.03 METAL WIREWAYS AND AUXILIARY GUTTERS

A. Description: Sheet metal, complying with UL 870 and NEMA 250, Type 1 unless otherwise indicated, and sized according to NFPA 70.

1. Metal wireways installed outdoors shall be listed and labeled as defined in NFPA 70, by a qualified testing agency, and marked for intended location and application.

B. Fittings and Accessories: Include covers, couplings, offsets, elbows, expansion joints, adapters, hold-down straps, end caps, and other fittings to match and mate with wireways as required for complete system.

C. Wireway Covers: Screw-cover type unless otherwise indicated.

D. Finish: Manufacturer's standard enamel finish.

2.04 NONMETALLIC WIREWAYS AND AUXILIARY GUTTERS

A. Listing and Labeling: Nonmetallic wireways and auxiliary gutters shall be listed and labeled as defined in NFPA 70, by a qualified testing agency, and marked for intended location and application.

B. Description: PVC, extruded and fabricated to required size and shape, and having snap-on cover, mechanically coupled connections, and plastic fasteners.

C. Fittings and Accessories: Couplings, offsets, elbows, expansion joints, adapters, hold-down straps, end caps, and other fittings shall match and mate with wireways as required for complete system.

D. Solvents and Adhesives: As recommended by conduit manufacturer.

2.05 SURFACE RACEWAYS

A. Listing and Labeling: Surface raceways and tele-power poles shall be listed and labeled as defined in NFPA 70, by a qualified testing agency, and marked for intended location and application.

B. Surface Metal Raceways: Galvanized steel with snap-on covers complying with UL 5. Manufacturer's standard enamel finish in color selected by Engineer.

C. Surface Nonmetallic Raceways: Two- or three-piece construction, complying with UL 5A, and manufactured of rigid PVC with texture and color selected by Engineer from manufacturer's standard colors. Product shall comply with UL 94 V-0 requirements for self-extinguishing characteristics.

2.06 BOXES, ENCLOSURES, AND CABINETS

A. General Requirements for Boxes, Enclosures, and Cabinets: Boxes, enclosures, and cabinets installed in wet locations shall be listed for use in wet locations.

B. Sheet Metal Outlet and Device Boxes: Comply with NEMA OS 1 and UL 514A.

C. Cast-Metal Outlet and Device Boxes: Comply with NEMA FB 1, ferrous alloy or aluminum, Type FD, with gasketed cover.

D. Nonmetallic Outlet and Device Boxes: Not permitted on project.

E. Metal Floor Boxes:

1. Material: see notes for application.

2. Type: Fully adjustable.

3. Shape: see notes for application.

4. Listing and Labeling: Metal floor boxes shall be listed and labeled as defined in NFPA 70, by a qualified testing agency, and marked for intended location and application.

F. Luminaire Outlet Boxes: Nonadjustable, designed for attachment of luminaire weighing 50 lb. Outlet boxes designed for attachment of luminaires weighing more than 50 lb shall be listed and marked for the maximum allowable weight.

G. Small Sheet Metal Pull and Junction Boxes: NEMA OS 1.

H. Cast-Metal Access, Pull, and Junction Boxes: Comply with NEMA FB 1 and UL 1773, cast aluminum with gasketed cover.

I. Box extensions used to accommodate new building finishes shall be of same material as recessed box.

J. Device Box Dimensions: 4 inches square by 2-1/8 inches deep.

K. Gangable boxes are prohibited.

L. Hinged-Cover Enclosures: Comply with UL 50 and NEMA 250, Type 1 with continuous-hinge cover with flush latch unless otherwise indicated.

1. Metal Enclosures: Steel, finished inside and out with manufacturer's standard enamel.

2. Interior Panels: Steel; all sides finished with manufacturer's standard enamel.

M. Cabinets:

1. NEMA 250, Type 1, unless noted otherwise or otherwise required for the application. Galvanized-steel box with removable interior panel and removable front, finished inside and out with manufacturer's standard enamel.

2. Hinged door in front cover with flush latch and concealed hinge.

3. Key latch to match panelboards.

4. Metal barriers to separate wiring of different systems and voltage.

5. Accessory feet where required for freestanding equipment.

6. Nonmetallic cabinets shall be listed and labeled as defined in NFPA 70, by a qualified testing agency, and marked for intended location and application.

2.07 HANDHOLES AND BOXES FOR EXTERIOR UNDERGROUND WIRING

A. General Requirements for Handholes and Boxes:

1. Boxes and handholes for use in underground systems shall be designed and identified as defined in NFPA 70, for intended location and application.

2. Boxes installed in wet areas shall be listed and labeled as defined in NFPA 70, by a qualified testing agency, and marked for intended location and application.

B. Polymer-Concrete Handholes and Boxes with Polymer-Concrete Cover: Molded of sand and aggregate, bound together with polymer resin, and reinforced with steel, fiberglass, or a combination of the two.

1. Standard: Comply with SCTE 77.

2. Configuration: Designed for flush burial with closed bottom unless otherwise indicated.

3. Cover: Weatherproof, secured by tamper-resistant locking devices and having structural load rating consistent with enclosure and handhole location.

4. Cover Finish: Nonskid finish shall have a minimum coefficient of friction of 0.50.

5. Cover Legend: Molded lettering, "ELECTRIC”..

6. Conduit Entrance Provisions: Conduit-terminating fittings shall mate with entering ducts for secure, fixed installation in enclosure wall.

7. Handholes 12 Inches Wide by 24 Inches Long and Larger: Have inserts for cable racks and pulling-in irons installed before concrete is poured.

C. Fiberglass Handholes and Boxes: Molded of fiberglass-reinforced polyester resin, with frame and covers of polymer concrete.

1. Standard: Comply with SCTE 77.

2. Color of Frame and Cover: Gray unless noted otherwise.

3. Configuration: Designed for flush burial with closed bottom unless otherwise indicated.

4. Cover: Weatherproof, secured by tamper-resistant locking devices and having structural load rating consistent with enclosure and handhole location.

5. Cover Finish: Nonskid finish shall have a minimum coefficient of friction of 0.50.

6. Cover Legend: Molded lettering, "ELECTRIC.".

7. Conduit Entrance Provisions: Conduit-terminating fittings shall mate with entering ducts for secure, fixed installation in enclosure wall.

8. Handholes 12 Inches Wide by 24 Inches Long and Larger: Have inserts for cable racks and pulling-in irons installed before concrete is poured.

2.08 SOURCE QUALITY CONTROL FOR UNDERGROUND ENCLOSURES

A. Handhole and Pull-Box Prototype Test: Test prototypes of handholes and boxes for compliance with SCTE 77. Strength tests shall be for specified tier ratings of products supplied.

1. Tests of materials shall be performed by an independent testing agency.

2. Testing machine pressure gages shall have current calibration certification complying with ISO 9000 and ISO 10012 and traceable to NIST standards.

PART 3 - EXECUTION

3.01 RACEWAY APPLICATION

A. Outdoors: Apply raceway products as specified below unless otherwise indicated:

1. Exposed Conduit: GRC or IMC.

2. Concealed Conduit, Aboveground: GRC, IMC, or Type EPC-40-PVC.

3. Underground Conduit: RNC,
   a. Typ EPC-40-PVC unless noted otherwise.
   b. Type EPC-80-PVC under roadways.
   c. Direct buried unless noted otherwise.

4. Connection to Vibrating Equipment (Including Transformers and Hydraulic, Pneumatic, Electric Solenoid, or Motor-Driven Equipment): LFMC.

5. Boxes and Enclosures, Aboveground: NEMA 250, Type 3R.

B. Indoors: Apply raceway products as specified below unless otherwise indicated:

1. Exposed, Not Subject to Physical Damage: EMT.

2. Exposed, Not Subject to Severe Physical Damage: EMT

3. Exposed and Subject to Severe Physical Damage: GRC or IMC. Raceway locations include the following:
   a. Loading dock.
   b. Corridors used for traffic of mechanized carts, forklifts, and pallet-handling units.
   c. Gymnasiums.

4. Concealed in Ceilings and Interior Walls and Partitions: EMT.

5. Connection to Vibrating Equipment (Including Transformers and Hydraulic, Pneumatic, Electric Solenoid, or Motor-Driven Equipment): FMC, except use LFMC in damp or wet locations.

6. Damp or Wet Locations: IMC.

7. Boxes and Enclosures: NEMA 250, Type 1, except use NEMA 250, Type 4 stainless steel in institutional and commercial kitchens and damp or wet locations.

C. Minimum Raceway Size: 3/4-inch trade size.

D. Raceway Fittings: Compatible with raceways and suitable for use and location.

1. Rigid and Intermediate Steel Conduit: Use threaded rigid steel conduit fittings unless otherwise indicated. Comply with NEMA FB 2.10.

2. PVC Externally Coated, Rigid Steel Conduits: Use only fittings listed for use with this type of conduit. Patch and seal all joints, nicks, and scrapes in PVC coating after installing conduits and fittings. Use sealant recommended by fitting manufacturer and apply in thickness and number of coats recommended by manufacturer.

3. EMT: Comply with NEMA FB 2.10.

4. Flexible Conduit: Use only fittings listed for use with flexible conduit. Comply with NEMA FB 2.20.

E. Do not install aluminum conduits, boxes, or fittings in contact with concrete or earth.

F. Install surface raceways only where indicated on Drawings.

3.02 INSTALLATION

A. Comply with requirements in Section 260529 "Hangers and Supports for Electrical Systems" for hangers and supports.

B. Comply with NECA 1 and NECA 101 for installation requirements except where requirements on Drawings or in this article are stricter. Comply with NECA 102 for aluminum conduits. Comply with NFPA 70 limitations for types of raceways allowed in specific occupancies and number of floors.

C. Do not fasten conduits onto the bottom side of a metal deck roof.

D. Keep raceways at least 6 inches away from parallel runs of flues and steam or hot-water pipes. Install horizontal raceway runs above water and steam piping.

E. Complete raceway installation before starting conductor installation.

F. Arrange stub-ups so curved portions of bends are not visible above finished slab.

G. Install no more than the equivalent of three 90-degree bends in any conduit run except for control wiring conduits, for which fewer bends are allowed. Support within 12 inches of changes in direction.

H. Make bends in raceway using large-radius preformed ells. Field bending shall be according to NFPA 70 minimum radii requirements. Use only equipment specifically designed for material and size involved.

I. Conceal conduit within finished walls, ceilings, and floors unless otherwise indicated. Install conduits parallel or perpendicular to building lines.

J. Support conduit within 12 inches of enclosures to which attached.

K. Raceways Embedded in Slabs:

1. Run conduit larger than 1-inch trade size, parallel or at right angles to main reinforcement. Where at right angles to reinforcement, place conduit close to slab support. Secure raceways to reinforcement at maximum 10-foot intervals.

2. Arrange raceways to cross building expansion joints at right angles with expansion fittings.

3. Arrange raceways to keep a minimum of 2 inches of concrete cover in all directions.

4. Do not embed threadless fittings in concrete unless specifically approved by Engineer for each specific location.

5. Change from ENT to GRC or IMC before rising above floor.

L. Stub-Ups to Above Recessed Ceilings:

1. Use EMT, IMC, or RMC for raceways.

2. Use a conduit bushing or insulated fitting to terminate stub-ups not terminated in hubs or in an enclosure.

M. Threaded Conduit Joints, Exposed to Wet, Damp, Corrosive, or Outdoor Conditions: Apply listed compound to threads of raceway and fittings before making up joints. Follow compound manufacturer's written instructions.

N. Coat field-cut threads on PVC-coated raceway with a corrosion-preventing conductive compound prior to assembly.

O. Raceway Terminations at Locations Subject to Moisture or Vibration: Use insulating bushings to protect conductors including conductors smaller than No. 4 AWG.

P. Terminate threaded conduits into threaded hubs or with locknuts on inside and outside of boxes or cabinets. Install bushings on conduits up to 1-1/4-inch trade size and insulated throat metal bushings on 1-1/2-inch trade size and larger conduits terminated with locknuts. Install insulated throat metal grounding bushings on service conduits.

Q. Install raceways square to the enclosure and terminate at enclosures with locknuts. Install locknuts hand tight plus 1/4 turn more.

R. Do not rely on locknuts to penetrate nonconductive coatings on enclosures. Remove coatings in the locknut area prior to assembling conduit to enclosure to assure a continuous ground path.

S. Cut conduit perpendicular to the length. For conduits 2-inch trade size and larger, use roll cutter or a guide to make cut straight and perpendicular to the length.

T. Install pull wires in empty raceways. Use polypropylene or monofilament plastic line with not less than 200-lb tensile strength. Leave at least 24 inches of slack at each end of pull wire. Cap underground raceways designated as spare above grade alongside raceways in use.

U. Surface Raceways:

1. Install surface raceway with a minimum 2-inch radius control at bend points.

2. Secure surface raceway with screws or other anchor-type devices at intervals not exceeding 48 inches when located below 7-foot AFF, and with no less than two supports per straight raceway section. Support surface raceway according to manufacturer's written instructions. Tape and glue are not acceptable support methods.

V. Install raceway sealing fittings at accessible locations according to NFPA 70 and fill them with listed sealing compound. For concealed raceways, install each fitting in a flush steel box with a blank cover plate having a finish similar to that of adjacent plates or surfaces. Install raceway sealing fittings according to NFPA 70.

W. Install devices to seal raceway interiors at accessible locations. Locate seals so no fittings or boxes are between the seal and the following changes of environments. Seal the interior of all raceways at the following points:

1. Where conduits pass from warm to cold locations, such as boundaries of refrigerated spaces.

2. Where an underground service raceway enters a building or structure.

3. Conduit extending from interior to exterior of building.

4. Conduit extending into pressurized duct and equipment.

5. Conduit extending into pressurized zones that are automatically controlled to maintain different pressure set points.

6. Where otherwise required by NFPA 70.

X. Comply with manufacturer's written instructions for solvent welding RNC and fittings.

Y. Expansion-Joint Fittings:

1. Install in each run of aboveground RNC that is located where environmental temperature change may exceed 30 deg F and that has straight-run length that exceeds 25 feet. Install in each run of aboveground RMC and EMT conduit that is located where environmental temperature change may exceed 100 deg F and that has straight-run length that exceeds 100 feet.

2. Install type and quantity of fittings that accommodate temperature change listed for each of the following locations:
   a. Outdoor Locations Not Exposed to Direct Sunlight: 125 deg F temperature change.
   b. Outdoor Locations Exposed to Direct Sunlight: 155 deg F temperature change.
   c. Indoor Spaces Connected with Outdoors without Physical Separation: 125 deg F temperature change.
   d. Attics: 135 deg F temperature change.

3. Install fitting(s) that provide expansion and contraction for at least 0.00041 inch per foot of length of straight run per deg F of temperature change for PVC conduits. Install fitting(s) that provide expansion and contraction for at least 0.000078 inch per foot of length of straight run per deg F of temperature change for metal conduits.

4. Install expansion fittings at all locations where conduits cross building or structure expansion joints.

5. Install each expansion-joint fitting with position, mounting, and piston setting selected according to manufacturer's written instructions for conditions at specific location at time of installation. Install conduit supports to allow for expansion movement.

Z. Flexible Conduit Connections: Comply with NEMA RV 3. Use a maximum of 72 inches of flexible conduit for recessed and semirecessed luminaires, equipment subject to vibration, noise transmission, or movement; and for transformers and motors.

1. Use LFMC in damp or wet locations subject to severe physical damage.

2. Use LFMC or LFNC in damp or wet locations not subject to severe physical damage.

AA. Mount boxes at heights indicated on Drawings. If mounting heights of boxes are not individually indicated, give priority to ADA requirements. Install boxes with height measured to center of box unless otherwise indicated.

BB. Recessed Boxes in Masonry Walls: Saw-cut opening for box in center of cell of masonry block, and install box flush with surface of wall. Prepare block surfaces to provide a flat surface for a raintight connection between box and cover plate or supported equipment and box.

CC. Horizontally separate boxes mounted on opposite sides of walls so they are not in the same vertical channel.

DD. Locate boxes so that cover or plate will not span different building finishes.

EE. Support boxes of three gangs or more from more than one side by spanning two framing members or mounting on brackets specifically designed for the purpose.

FF. Fasten junction and pull boxes to or support from building structure. Do not support boxes by conduits.

GG. Set floor boxes level and flush with finished floor surface. Trim after installation to fit flush with finished floor surface.

3.03 INSTALLATION OF UNDERGROUND CONDUIT

A. Direct-Buried Conduit:

1. Excavate trench bottom to provide firm and uniform support for conduit. Prepare trench bottom as specified in Section 312000 "Earth Moving" for pipe less than 6 inches in nominal diameter.

2. Install backfill as specified in Section 312000 "Earth Moving."

3. After installing conduit, backfill and compact. Start at tie-in point, and work toward end of conduit run, leaving conduit at end of run free to move with

expansion and contraction as temperature changes during this process. Firmly hand tamp backfill around conduit to provide maximum supporting strength. After placing controlled backfill to within 12 inches of finished grade, make final conduit connection at end of run and complete backfilling with normal compaction as specified in Section 312000 "Earth Moving."

4. Install manufactured rigid steel conduit elbows for stub-ups at poles and equipment and at building entrances through floor.
   a. For stub-ups at equipment mounted on outdoor concrete bases and where conduits penetrate building foundations, extend steel conduit horizontally a minimum of 60 inches from edge of foundation or equipment base. Install insulated grounding bushings on terminations at equipment.

5. Underground Warning Tape: Comply with requirements in Section 260553 "Identification for Electrical Systems."

3.04 INSTALLATION OF UNDERGROUND HANDHOLES AND BOXES

A. Install handholes and boxes level and plumb and with orientation and depth coordinated with connecting conduits to minimize bends and deflections required for proper entrances.

B. Unless otherwise indicated, support units on a level bed of crushed stone or gravel, graded from 1/2-inch sieve to No. 4 sieve and compacted to same density as adjacent undisturbed earth.

C. Elevation: In paved areas, set so cover surface will be flush with finished grade. Set covers of other enclosures 1 inch above finished grade.

D. Install handholes with bottom below frost line, below grade.

E. Install removable hardware, including pulling eyes, cable stanchions, cable arms, and insulators, as required for installation and support of cables and conductors and as indicated. Select arm lengths to be long enough to provide spare space for future cables but short enough to preserve adequate working clearances in enclosure.

F. Field-cut openings for conduits according to enclosure manufacturer's written instructions. Cut wall of enclosure with a tool designed for material to be cut. Size holes for terminating fittings to be used, and seal around penetrations after fittings are installed.

3.05 SLEEVE AND SLEEVE-SEAL INSTALLATION FOR ELECTRICAL PENETRATIONS

A. Install 0sleeves and sleeve seals at penetrations of exterior floor and wall assemblies. Comply with requirements in Section 260544 "Sleeves and Sleeve Seals for Electrical Raceways and Cabling."

3.06 FIRESTOPPING

A. Install firestopping at penetrations of fire-rated floor and wall assemblies. Comply with requirements in Section 078413 "Penetration Firestopping."

3.07 PROTECTION

A. Protect coatings, finishes, and cabinets from damage and deterioration.

1. Repair damage to galvanized finishes with zinc-rich paint recommended by manufacturer.

2. Repair damage to PVC coatings or paint finishes with matching touchup coating recommended by manufacturer.

END OF SECTION

2605 33

26 05 53

IDENTIFICATION FOR ELECTRICAL SYSTEMS

PART 1 - GENERAL

1.01 RELATED DOCUMENTS

A. Drawings and general provisions of the Contract, including General and Supplementary Conditions and Division 01 Specification Sections, apply to this Section.

1.02 SUMMARY

A. Section Includes:

1. Color and legend requirements for raceways, conductors, and warning labels and signs.
2. Labels.
3. Bands and tubes.
4. Tapes and stencils.
5. Tags.
6. Signs.
7. Cable ties.
8. Paint for identification.
9. Fasteners for labels and signs.

1.03 ACTION SUBMITTALS

A. Product Data: For each type of product.

1. Include construction details, material descriptions, dimensions of individual components and profiles, and finishes for electrical identification products.

B. Identification Schedule: For each piece of electrical equipment and electrical system components to be an index of nomenclature for electrical equipment and system components used in identification signs and labels. Use same designations indicated on Drawings.

C. Delegated-Design Submittal: For arc-flash hazard study.

PART 2 - PRODUCTS

2.01 PERFORMANCE REQUIREMENTS

A. Comply with ASME A13.1 and IEEE C2.

B. Comply with NFPA 70.

C. Comply with 29 CFR 1910.144 and 29 CFR 1910.145.

D. Comply with ANSI Z535.4 for safety signs and labels.

E. Comply with NFPA 70E and Section 260573.19 "Arc-Flash Hazard Analysis" requirements for arc-flash warning labels.

F. Adhesive-attached labeling materials, including label stocks, laminating adhesives, and inks used by label printers, shall comply with UL 969.

G. Thermal Movements: Allow for thermal movements from ambient and surface temperature changes.

2.02 COLOR AND LEGEND REQUIREMENTS

A. Raceways and Cables Carrying Circuits at 600 V or Less:

1. Black letters on an white field.

2. Legend: Indicate voltage and system or service type.

B. Color-Coding for Phase-and Voltage-Level Identification, 600 V or Less: Use colors listed below for ungrounded service feeder and branch-circuit conductors.

1. Color shall be factory applied or field applied for sizes larger than No. 8 AWG if authorities having jurisdiction permit.

2. Colors for 208/120-V Circuits:
   a. Phase A: Black.
   b. Phase B: Red.
   c. Phase C: Blue.
   d. Neutral: White

3. Colors for 480/277-V Circuits:
   a. Phase A: Brown.
   b. Phase B: Orange.
   c. Phase C: Yellow.
   d. Neutral: Gray

4. Color for Equipment Grounds: Green.

5. Colors for Isolated Grounds: Green with white stripe.

C. Raceways and Cables Carrying Circuits at More Than 600 V:

1. Black letters on an orange field.

2. Legend: "DANGER - CONCEALED HIGH VOLTAGE WIRING."

D. Warning Label Colors:

1. Identify system voltage with black letters on an orange background.

E. Warning labels and signs shall include, but are not limited to, the following legends:

1. Multiple Power Source Warning: "DANGER - ELECTRICAL SHOCK HAZARD - EQUIPMENT HAS MULTIPLE POWER SOURCES."

2. Workspace Clearance Warning: "WARNING - OSHA REGULATION - AREA IN FRONT OF ELECTRICAL EQUIPMENT MUST BE KEPT CLEAR FOR 36 INCHES."

F. Equipment Identification Labels:

1. Black letters on a white field.

2.03 LABELS

A. Vinyl Wraparound Labels: Preprinted, flexible labels laminated with a clear, weather- and chemical-resistant coating and matching wraparound clear adhesive tape for securing label ends.

B. Snap-around Labels: Slit, pretensioned, flexible, preprinted, color-coded acrylic sleeves, with diameters sized to suit diameters and that stay in place by gripping action.

C. Self-Adhesive Wraparound Labels: Preprinted, 3-mil- thick, polyester or vinyl flexible label with acrylic pressure-sensitive adhesive.

1. Self-Lamination: Clear; UV-, weather- and chemical-resistant; self-laminating, protective shield over the legend. Labels sized such that the clear shield overlaps the entire printed legend.

2. Marker for Labels: Machine-printed, permanent, waterproof, black ink recommended by printer manufacturer.

D. Self-Adhesive Labels: Polyester or Vinyl, thermal, transfer-printed, 3-mil- thick, multicolor, weather- and UV-resistant, pressure-sensitive adhesive labels, configured for intended use and location.

1. Minimum Nominal Size:
   a. 1-1/2 by 6 inches for raceway and conductors.
   b. 3-1/2 by 5 inches for equipment.
   c. As required by authorities having jurisdiction.

2.04 BANDS AND TUBES

A. Snap-around, Color-Coding Bands: Slit, pretensioned, flexible, solid-colored acrylic sleeves, 2 inches long, with diameters sized to suit diameters and that stay in place by gripping action.

B. Heat-Shrink Preprinted Tubes: Flame-retardant polyolefin tubes with machine-printed identification labels, sized to suit diameter and shrunk to fit firmly. Full shrink recovery occurs at a maximum of 200 deg F. Comply with UL 224.

2.05 TAPES AND STENCILS

A. Marker Tapes: Vinyl or vinyl-cloth, self-adhesive wraparound type, with circuit identification legend machine printed by thermal transfer or equivalent process.

B. Self-Adhesive Vinyl Tape: Colored, heavy duty, waterproof, fade resistant; not less than 3 mils thick by 1 to 2 inches wide; compounded for outdoor use.

C. Floor Marking Tape: 2-inch- wide, 5-mil pressure-sensitive vinyl tape, with yellow and black stripes and clear vinyl overlay.

D. Underground-Line Warning Tape:

1. Tape:
   a. Recommended by manufacturer for the method of installation and suitable to identify and locate underground electrical and communications utility lines.
   b. Printing on tape shall be permanent and shall not be damaged by burial operations.
   c. Tape material and ink shall be chemically inert and not subject to degradation when exposed to acids, alkalis, and other destructive substances commonly found in soils.
   d. 5-mil tape has aluminum backing to make it easy to find underground using a non-ferrous locator

2. Color and Printing:
   a. Comply with ANSI Z535.1, ANSI Z535.2, ANSI Z535.3, ANSI Z535.4, and ANSI Z535.5. Printed on APWA approved colors to meet or exceed industry standards
   b. Power: Message reads "CAUTION BURIED ELECTRIC LINE BELOW" in black lettering on a red background
   c. Communication: Inscriptions for Orange-Colored Tapes: "TELEPHONE CABLE, CATV CABLE, COMMUNICATIONS CABLE, OPTICAL FIBER CABLE".

2.06 TAGS

A. Nonmetallic Preprinted Tags: Polyethylene tags, 0.023 inch thick, color-coded for phase and voltage level, with factory printed permanent designations; punched for use with self-locking cable tie fastener.

B. Write-on Tags:

1. Polyester Tags: 0.015 inch thick, with corrosion-resistant grommet and cable tie for attachment.

2. Marker for Tags: Machine-printed, permanent, waterproof, black ink marker recommended by printer manufacturer.

2.07 SIGNS

A. Baked-Enamel Signs:

1. Preprinted aluminum signs, punched or drilled for fasteners, with colors, legend, and size required for application.

2. 1/4-inch (6.4-mm) grommets in corners for mounting.

3. Nominal Size: 7 by 10 inches (180 by 250 mm).

B. Metal-Backed Butyrate Signs:

1. Weather-resistant, nonfading, preprinted, cellulose-acetate butyrate signs, with 0.0396-inch (1-mm) galvanized-steel backing, punched and drilled for fasteners, and with colors, legend, and size required for application.

2. 1/4-inch (6.4-mm) grommets in corners for mounting.

3. Nominal Size: 10 by 14 inches (250 by 360 mm).

C. Laminated Acrylic or Melamine Plastic Signs:

1. Engraved legend.

2. Thickness:
   a. For signs up to 20 sq. in. (129 sq. cm), minimum 1/16 inch (1.6 mm) thick.
   b. For signs larger than 20 sq. in. (129 sq. cm), 1/8 inch (3.2 mm) thick.
   c. Engraved legend with black letters on white face.
   d. Punched or drilled for mechanical fasteners with 1/4-inch grommets in corners for mounting.

2.08 CABLE TIES

A. General-Purpose Cable Ties: Fungus inert, self-extinguishing, one piece, self-locking, and Type 6/6 nylon.

1. Minimum Width: 3/16 inch.

2. Tensile Strength at 73 Deg F according to ASTM D 638: 12,000 psi.

3. Temperature Range: Minus 40 to plus 185 deg F.

4. Color: Black, except where used for color-coding.

B. Plenum-Rated Cable Ties: Self-extinguishing, UV stabilized, one piece, and self-locking.

1. Minimum Width: 3/16 inch.

2. Tensile Strength at 73 Deg F according to ASTM D 638: 7000 psi.

3. UL 94 Flame Rating: 94V-0.

4. Temperature Range: Minus 50 to plus 284 deg F.

5. Color: Black.

2.09 MISCELLANEOUS IDENTIFICATION PRODUCTS

A. Paint: Comply with requirements in painting Sections for paint materials and application requirements. Retain paint system applicable for surface material and location (exterior or interior).

B. Fasteners for Labels and Signs: Self-tapping, stainless-steel screws or stainless-steel machine screws with nuts and flat and lock washers.

PART 3 - EXECUTION

3.01 PREPARATION

A. Self-Adhesive Identification Products: Before applying electrical identification products, clean substrates of substances that could impair bond, using materials and methods recommended by manufacturer of identification product.

3.02 INSTALLATION

A. Verify and coordinate identification names, abbreviations, colors, and other features with requirements in other Sections requiring identification applications, Drawings, Shop Drawings, manufacturer's wiring diagrams, and operation and maintenance manual. Use consistent designations throughout Project.

B. Install identifying devices before installing acoustical ceilings and similar concealment.

C. Verify identity of each item before installing identification products.

D. Coordinate identification with Project Drawings, manufacturer's wiring diagrams, and operation and maintenance manual.

E. Apply identification devices to surfaces that require finish after completing finish work.

F. Install signs with approved legend to facilitate proper identification, operation, and maintenance of electrical systems and connected items.

G. System Identification for Raceways and Cables under 600 V: Identification shall completely encircle cable or conduit. Place identification of two-color markings in contact, side by side.

1. Secure tight to surface of conductor, cable, or raceway.

H. Auxiliary Electrical Systems Conductor Identification: Identify field-installed alarm, control, and signal connections.

I. Emergency Operating Instruction Signs: Install instruction signs with white legend on a red background with minimum 3/8-inch- high letters for emergency instructions at equipment used for power transfer.

J. Elevated Components: Increase sizes of labels, signs, and letters to those appropriate for viewing from the floor.

K. Accessible Fittings for Raceways: Identify the covers of each junction and pull box of the following systems with the wiring system legend and system voltage. System legends shall be as follows:

1. "EMERGENCY POWER."

2. "POWER."

3. "UPS."

L. Snap-around Labels: Secure tight to surface at a location with high visibility and accessibility.

M. Self-Adhesive Wraparound Labels: Secure tight to surface at a location with high visibility and accessibility.

N. Self-Adhesive Labels:

1. On each item, install unique designation label that is consistent with wiring diagrams, schedules, and operation and maintenance manual.

2. Unless otherwise indicated, provide a single line of text with 1/2-inch- high letters on 1-1/2-inch- high label; where two lines of text are required, use labels 2 inches high.

O. Snap-around Color-Coding Bands: Secure tight to surface at a location with high visibility and accessibility.

P. Heat-Shrink, Preprinted Tubes: Secure tight to surface at a location with high visibility and accessibility.

Q. Marker Tapes: Secure tight to surface at a location with high visibility and accessibility.

R. Self-Adhesive Vinyl Tape: Secure tight to surface at a location with high visibility and accessibility.

1. Field-Applied, Color-Coding Conductor Tape: Apply in half-lapped turns for a minimum distance of 6 inches where splices or taps are made. Apply last two turns of tape with no tension to prevent possible unwinding.

S. Tape and Stencil: Comply with requirements in painting Sections for surface preparation and paint application.

T. Floor Marking Tape: Apply stripes to finished surfaces following manufacturer's written instructions.

U. Underground Line Warning Tape:

1. During backfilling of trenches, install continuous underground-line detectable warning tape directly above cable or raceway at 6 to 8 inches below finished grade. Use multiple tapes where width of multiple lines installed in a common trench or concrete envelope exceeds 16 inches overall.

2. Install underground-line warning tape for direct-buried cables and cables in raceways.

V. Metal Tags:

1. Place in a location with high visibility and accessibility.

2. Secure using plenum-rated cable ties.

W. Nonmetallic Preprinted Tags:

1. Place in a location with high visibility and accessibility.

2. Secure using plenum-rated cable ties.

X. Write-on Tags:

1. Place in a location with high visibility and accessibility.

2. Secure using plenum-rated cable ties.

Y. Baked-Enamel Signs:

1. Attach signs that are not self-adhesive type with mechanical fasteners appropriate to the location and substrate.

2. Unless otherwise indicated, provide a single line of text with 1/2-inch- high letters on minimum 1-1/2-inch- high sign; where two lines of text are required, use signs minimum 2 inches high.

Z. Metal-Backed Butyrate Signs:

1. Attach signs that are not self-adhesive type with mechanical fasteners appropriate to the location and substrate.

2. Unless otherwise indicated, provide a single line of text with 1/2-inch-high letters on 1-1/2-inch- high sign; where two lines of text are required, use labels 2 inches high.

AA. Laminated Acrylic or Melamine Plastic Signs:

1. Attach signs that are not self-adhesive type with mechanical fasteners appropriate to the location and substrate.

2. Unless otherwise indicated, provide a single line of text with 1/2-inch- high letters on 1-1/2-inch- high sign; where two lines of text are required, use labels 2 inches (50 mm) high.

BB. Cable Ties: General purpose, for attaching tags, except as listed below:

1. Outdoors: UV-stabilized nylon.

2. In Spaces Handling Environmental Air: Plenum rated.

3.03 IDENTIFICATION SCHEDULE

A. Install identification materials and devices at locations for most convenient viewing without interference with operation and maintenance of equipment. Install access doors or panels to provide view of identifying devices.

B. Identify conductors, cables, and terminals in enclosures and at junctions, terminals, pull points, and locations of high visibility. Identify by system and circuit designation.

C. Accessible Raceways and Metal-Clad Cables, 600 V or Less, for Service, Feeder, and Branch Circuits, More Than 30A and 120V to Ground: Identify with self-adhesive raceway labels vinyl tape applied in bands.

1. Locate identification at changes in direction, at penetrations of walls and floors, at 50-foot maximum intervals in straight runs, and at 25-foot maximum intervals in congested areas.

D. Power-Circuit Conductor Identification, 600 V or Less: For conductors in vaults, pull and junction boxes, manholes, and handholes, use vinyl wraparound labels to identify the phase.

1. Locate identification at changes in direction, at penetrations of walls and floors, at 50-foot maximum intervals in straight runs, and at 25-foot maximum intervals in congested areas.

E. Control-Circuit Conductor Identification: For conductors and cables in pull and junction boxes, manholes, and handholes, use write-on tags or self-adhesive labels with the conductor or cable designation, origin, and destination.

F. Control-Circuit Conductor Termination Identification: For identification at terminations, provide heat-shrink preprinted tubes with the conductor designation.

G. Conductors to Be Extended in the Future: Attach write-on tags to conductors and list source.

H. Locations of Underground Lines: Underground-line warning tape for power, lighting, communication, and control wiring and optical-fiber cable.

I. Concealed Raceways and Duct Banks, More Than 600 V, within Buildings: Apply floor marking tape to the following finished surfaces:

1. Floor surface directly above conduits running beneath and within 12 inchesof a floor that is in contact with earth or is framed above unexcavated space.

2. Wall surfaces directly external to raceways concealed within wall.

3. Accessible surfaces of concrete envelope around raceways in vertical shafts, exposed in the building, or concealed above suspended ceilings.

J. Workspace Indication: Apply floor marking tape to finished surfaces. Show working clearances in the direction of access to live parts. Workspace shall comply with NFPA 70 and 29 CFR 1926.403 unless otherwise indicated. Do not install at flush-mounted panelboards and similar equipment in finished spaces.

K. Instructional Signs: Self-adhesive labels, including the color code for grounded and ungrounded conductors.

L. Warning Labels for Indoor Cabinets, Boxes, and Enclosures for Power and Lighting: Baked-enamel warning signs.

1. Apply to exterior of door, cover, or other access.

2. For equipment with multiple power or control sources, apply to door or cover of equipment, including, but not limited to, the following:
   a. Power-transfer switches.
   b. Controls with external control power connections.

M. Arc Flash Warning Labeling: Self-adhesive labels.

N. Operating Instruction Signs: Baked-enamel warning signs.

O. Emergency Operating Instruction Signs: Baked-enamel warning signs with white legend on a red background with minimum 3/8-inch- high letters for emergency instructions at equipment.

P. Equipment Identification Labels:

1. Indoor Equipment: Baked-enamel signs.

2. Outdoor Equipment: Laminated acrylic or melamine sign.

3. Equipment to Be Labeled:

a. Panelboards: Typewritten directory of circuits in the location provided by panelboard manufacturer. Panelboard identification shall be in the form of a engraved, laminated acrylic or melamine label.
b. Enclosures and electrical cabinets.
c. Access doors and panels for concealed electrical items.
d. Switchboards.
e. Enclosed switches.
f. Enclosed circuit breakers.
g. Enclosed controllers.
h. Variable-speed controllers.
i. Push-button stations.
j. Contactors.
k. Remote-controlled switches, dimmer modules, and control devices.
l. Battery-inverter units.

END OF SECTION

26 05 53

THIS PAGE IS BLANK

26 05 73

ELECTRICAL SYSTEM STUDIES

PART 1 - GENERAL

1.01 RELATED DOCUMENTS

A. Drawings and general provisions of the Contract, including General and Supplemental General Conditions and Division 01 Specification Sections, apply to this Section.

1.02 SUMMARY

A. This Section includes computer-based study of the following aspects of the projects electrical system:

1. Fault-current,

2. Overcurrent protective device coordination

3. Arc flash hazard analysis studies.

B. Protective devices shall be set based on results of the protective device coordination study.

1.03 DEFINITIONS

A. Power System Analysis Software Developer: An entity that commercially develops, maintains, and distributes computer software used for power system studies.

B. Power Systems Analysis Specialist: Professional engineer in charge of performing the study and documenting recommendations, licensed in the state where Project is located.

C. Protective Device: A device that senses when an abnormal current flow exists and then removes the affected portion of the circuit from the system.

D. SCCR: Short-circuit current rating.

E. Service: The conductors and equipment for delivering electric energy from the serving utility to the wiring system of the premises served.

F. Single-Line Diagram: See "One-Line Diagram."

1.04 SUBMITTALS

A. Product Data: For computer software program to be used for studies.

B. Product Certificates: For coordination-study and fault-current-study computer software programs, certifying compliance with IEEE 399.

C. Qualification Data: For coordination-study specialist.

D. Submit the following after the approval of system protective devices submittals. Submittals shall be in digital form.

1. Input data, including completed computer program input data sheets

2. Short-circuit;
   a. Study and equipment evaluation report;
   b. Signed, dated, and sealed by a qualified professional engineer.
   c. Submit study report for action prior to receiving final approval of distribution equipment submittals. If formal completion of studies will cause delay in equipment manufacturing, obtain approval from Architect for preliminary submittal of sufficient study data to ensure that selection of devices and associated characteristics is satisfactory.
   d. Revised one-line diagram, reflecting field investigation results and results of short-circuit study

3. Arc-flash study
   a. Report; signed, dated, and sealed by Power Systems Analysis Specialist.
   b. Submit study report for action prior to receiving final approval of distribution equipment submittals. If formal completion of studies will cause delay in equipment manufacturing, obtain approval from Architect for preliminary submittal of sufficient study data to ensure that selection of devices and associated characteristics is satisfactory.

E. Other Action Submittals: The following submittals shall be made after the approval process for system protective devices has been completed. Submittals may be in digital form.

1. Coordination-study input data, including completed computer program input data sheets.

2. Study and Equipment Evaluation Reports.

3. Coordination-Study Report.

1.05 QUALITY ASSURANCE

A. Studies shall use computer programs that are distributed nationally and are in wide use. Software algorithms shall comply with requirements of standards and guides specified in this Section. Manual calculations are not acceptable.

B. Coordination-Study Specialist Qualifications: An entity experienced in the application of computer software used for studies, having performed successful studies of similar magnitude on electrical distribution systems using similar devices.

1. Professional engineer, licensed in the state where Project is located, shall be responsible for the study. All elements of the study shall be performed under the direct supervision and control of engineer.

C. Comply with IEEE 242 for short-circuit currents and coordination time intervals.

D. Comply with IEEE 399 for general study procedures.

PART 2 - PRODUCTS

2.01 COMPUTER SOFTWARE DEVELOPERS

A. Computer Software Developers: Subject to compliance with requirements, provide products by one of the following:

B. Basis-of-Design Product: Subject to compliance with requirements, provide product by one of the following:

1. CGI CYME.

2. EDSA Micro Corporation.

3. ESA Inc.

4. Operation Technology, Inc.

5. SKM Systems Analysis, Inc.

2.02 COMPUTER SOFTWARE PROGRAM REQUIREMENTS

A. Comply with IEEE 399.

B. Analytical features of fault-current-study computer software program shall include "mandatory," "very desirable," and "desirable" features as listed in IEEE 399.

C. Computer software program shall be capable of plotting and diagramming time-current-characteristic curves as part of its output. Computer software program shall report device settings and ratings of all overcurrent protective devices and shall demonstrate selective coordination by computer-generated, time-current coordination plots.

PART 3 - EXECUTION

3.01 EXAMINATION

A. Examine Project overcurrent protective device submittals for compliance with electrical distribution system coordination requirements and other conditions affecting performance. Devices to be coordinated are indicated on Drawings.

1. Proceed with coordination study only after relevant equipment submittals have been assembled. Overcurrent protective devices that have not been submitted and approved prior to coordination study may not be used in study.

3.02 POWER SYSTEM DATA

A. Gather and tabulate the following input data to support coordination study:

1. Product Data for overcurrent protective devices specified in other Division 26 Sections and involved in overcurrent protective device coordination studies. Use equipment designation tags that are consistent with electrical distribution system diagrams, overcurrent protective device submittals, input and output data, and recommended device settings.

2. Impedance of utility service entrance.

3. Electrical Distribution System Diagram: In hard-copy and electronic-copy formats, showing the following:
   a. Circuit-breaker and fuse-current ratings and types.
   b. Relays and associated power and current transformer ratings and ratios.
   c. Transformer kilovolt amperes, primary and secondary voltages, connection type, impedance, and X/R ratios.
   d. Generator kilovolt amperes, size, voltage, and source impedance.
   e. Cables: Indicate conduit material, sizes of conductors, conductor material, insulation, and length.
   f. Busway ampacity and impedance.
   g. Motor horsepower and code letter designation according to NEMA MG 1.

4. Data sheets to supplement electrical distribution system diagram, cross-referenced with tag numbers on diagram, showing the following:
   a. Special load considerations, including starting inrush currents and frequent starting and stopping.
   b. Transformer characteristics, including primary protective device, magnetic inrush current, and overload capability.
   c. Motor full-load current, locked rotor current, service factor, starting time, type of start, and thermal-damage curve.
   d. Generator thermal-damage curve.
   e. Ratings, types, and settings of utility company's overcurrent protective devices.
   f. Special overcurrent protective device settings or types stipulated by utility company.
   g. Time-current-characteristic curves of devices indicated to be coordinated.
   h. Manufacturer, frame size, interrupting rating in amperes rms symmetrical, ampere or current sensor rating, long-time adjustment range, short-time adjustment range, and instantaneous adjustment range for circuit breakers.
   i. Manufacturer and type, ampere-tap adjustment range, time-delay adjustment range, instantaneous attachment adjustment range, and current transformer ratio for overcurrent relays.
   j. Panelboards, switchboards, motor-control center ampacity, and interrupting rating in amperes rms symmetrical.

3.03 FAULT-CURRENT STUDY

A. Calculate the maximum available short-circuit current in amperes rms symmetrical at circuit-breaker positions of the electrical power distribution system. The calculation shall be for a current immediately after initiation and for a three-phase bolted short circuit at each of the following:

1. All medium voltage and low voltage distribution equipment.

B. Study electrical distribution system from normal and alternate power sources throughout electrical distribution system for Project. Include studies of system-switching configurations and alternate operations that could result in maximum fault conditions.

C. Calculate momentary and interrupting duties on the basis of maximum available fault current.

D. Calculations to verify interrupting ratings of overcurrent protective devices shall comply with IEEE 141 and IEEE 242.

1. Transformers:
   a. ANSI C57.12.10.
   b. ANSI C57.12.22.
   c. NSI C57.12.40.
   d. IEEE C57.12.00.
   e. IEEE C57.96.

2. Medium-Voltage Circuit Breakers: IEEE C37.010.

3. Low-Voltage Circuit Breakers: IEEE 1015 and IEEE C37.20.1.

4. Low-Voltage Fuses: IEEE C37.46.

E. Study Report:

1. Show calculated X/R ratios and equipment interrupting rating (1/2-cycle) fault currents on electrical distribution system diagram.

2. Show interrupting (5-cycle) and time-delayed currents (6 cycles and above) on medium- [and high]-voltage breakers as needed to set relays and assess the sensitivity of overcurrent relays.

F. Equipment Evaluation Report:

1. For 600-V overcurrent protective devices, ensure that interrupting ratings are equal to or higher than calculated 1/2-cycle symmetrical fault current.

2. For devices and equipment rated for asymmetrical fault current, apply multiplication factors listed in the standards to 1/2-cycle symmetrical fault current.

3. Verify adequacy of phase conductors at maximum three-phase bolted fault currents; verify adequacy of equipment grounding conductors and grounding electrode conductors at maximum ground-fault currents. Ensure that short-circuit withstand ratings are equal to or higher than calculated 1/2-cycle symmetrical fault current.

3.04 COORDINATION STUDY

A. Provide a selectively coordinated system where indicated, and where required in compliance with the NEC.

B. Perform coordination study using approved computer software program. Prepare a written report using results of fault-current study. Comply with IEEE 399.

1. Calculate the maximum and minimum 1/2-cycle short-circuit currents.

2. Calculate the maximum and minimum interrupting duty (5 cycles to 2 seconds) short-circuit currents.

3. Calculate the maximum and minimum ground-fault currents.

C. Comply with IEEE 141 recommendations for fault currents and time intervals.

D. Transformer Primary Overcurrent Protective Devices:

1. Device shall not operate in response to the following:
   a. Inrush current when first energized.
   b. Self-cooled, full-load current or forced-air-cooled, full-load current, whichever is specified for that transformer.
   c. Permissible transformer overloads according to IEEE C57.96 if required by unusual loading or emergency conditions.

2. Device settings shall protect transformers according to IEEE C57.12.00, for fault currents.

E. Motors served by voltages more than 600 V shall be protected according to IEEE 620.

F. Conductor Protection: Protect cables against damage from fault currents according to ICEA P-32-382, ICEA P-45-482, and conductor melting curves in IEEE 242. Demonstrate that equipment withstands the maximum short-circuit current for a time equivalent to the tripping time of the primary relay protection or total clearing time of the fuse. To determine temperatures that damage insulation, use curves from cable manufacturers or from listed standards indicating conductor size and short-circuit current.

G. Coordination-Study Report: Prepare a written report indicating the following results of coordination study:

1. Tabular Format of Settings Selected for Overcurrent Protective Devices:
   a. Device tag.

b. Relay-current transformer ratios; and tap, time-dial, and instantaneous-pickup values.

c. Circuit-breaker sensor rating; and long-time, short-time, and instantaneous settings.

d. Fuse-current rating and type.

e. Ground-fault relay-pickup and time-delay settings.

2. Coordination Curves: Prepared to determine settings of overcurrent protective devices to achieve selective coordination. Graphically illustrate that adequate time separation exists between devices installed in series, including power utility company's upstream devices. Prepare separate sets of curves for the switching schemes and for emergency periods where the power source is local generation. Show the following information:

a. Device tag.

b. Voltage and current ratio for curves.

c. Three-phase and single-phase damage points for each transformer.

d. No damage, melting, and clearing curves for fuses.

e. Cable damage curves.

f. Transformer inrush points.

g. Maximum fault-current cutoff point.

H. Completed data sheets for setting of overcurrent protective devices.

3.05 ARC FLASH HAZARD ANALYSIS STUDY

A. Furnish an Arc Flash Hazard Analysis Study for the entire electrical system, including medium and low voltage equipment. Analysis shall be inclusive of individual disconnecting devices (not light switches or receptacles) per the requirements set forth in NFPA 70E – Standard for Electrical Safety in the workplace. The arc flash hazard analysis shall be performed according to the IEEE 1584 equations that are presented in NFPA 70E.

1. The flash protection boundary and the incident energy shall be calculated at all significant locations in the electrical distribution system (switchboards, switchgear, motor-control centers, panelboards, busway and splitters) where work could be performed on energized parts.

2. The Arc-Flash Hazard Analysis shall include all significant locations in 12,470 volt, 480 volt, and 208 volt systems where work could be performed on energized parts.

3. Safe working distances shall be based upon the calculated arc flash boundary considering an incident energy of 1.2 cal/cm2.

4. When appropriate, the short circuit calculations and the clearing times of the phase overcurrent devices will be retrieved from the short-circuit and coordination study model. Ground overcurrent relays should not be taken into consideration when determining the clearing time when performing incident energy calculations.

5. The short-circuit calculations and the corresponding incident energy calculations for multiple system scenarios must be compared and the greatest incident energy must be uniquely reported for each equipment location. Calculations must be performed to represent the maximum and minimum contributions of fault current magnitude for all normal and emergency operating conditions. The minimum calculation will assume that the utility contribution is at a minimum and will assume a minimum motor contribution (all motors off). Conversely, the maximum calculation will assume a maximum contribution from the utility and will assume the maximum amount of motors to be operating. Calculations shall take into consideration the parallel operation of synchronous generators with the electric utility, where applicable.

6. The incident energy calculations must consider the accumulation of energy over time when performing arc flash calculations on buses with multiple sources. Iterative calculations must take into account the changing current contributions, as the sources are interrupted or decremented with time. Fault contribution from motors and generators should be decremented as follows:
   a. Fault contribution from induction motors should not be considered beyond 3-5 cycles.
   b. Fault contribution from synchronous motors and generations should be decayed to match the actual decrement of each as closely as possible (e.g. contributions from permanent magnet generators will typically decay from 10 per unit to 3 per unit after 10 cycles).

7. For each equipment location with a separately enclosed main device (where there is adequate separation between the line side terminals of the main protective device and the work location), calculations for incident energy and flash protection boundary shall include both the line and load side of the main breaker.

8. When performing incident energy calculations on the line side of a main breaker (as required per above), the line side and load side contributions must be included in the fault calculation.

9. Mis-coordination should be checked amongst all devices within the branch containing the immediate protective device upstream of the calculation location and the calculation should utilize the fastest device to compute the incident energy for the corresponding location.

10. Arc Flash calculations shall be based on actual overcurrent protective device clearing time. Maximum clearing time will be capped at 2 seconds based on IEEE 1584-2002 section B.1.2. Where it is not physically possible to move outside of the flash protection boundary in less than 2 seconds during an arc flash event, a maximum clearing time based on the specific location shall be utilized.

B. Based on the results of the Arc Flash Hazard Analysis study, produce and install a warning label (orange ≤ 40 cal/cm2) or danger label (red > 40 cal/cm2) per NFPA 70 & 70E for each piece of equipment as specified above in accordance with ANSI Z535. The label must be readable in both indoor and outdoor environments for at least 3 years and contain the following information:

1. Arc hazard boundary (inches)

2. Working distance (inches)
3. Arc flash incident energy at the working distance (calories/cm2)
4. PPE category and description including the glove rating
5. Voltage rating of the equipment
6. Limited approach distance (inches)
7. Restricted approach distance (inches)
8. Prohibited approach distance (inches)
9. Equipment/bus name
10. Date prepared
11. Supplier name and address

END OF SECTION

26 05 73

THIS PAGE IS BLANK

26 24 13

SWITCHBOARDS

PART 1 - GENERAL

1.01 RELATED DOCUMENTS

A. Drawings and general provisions of the Contract, including General and Supplementary Conditions and Division 01 Specification Sections, apply to this Section.

1.02 SUMMARY

A. Section Includes:

1. Service and distribution switchboards rated 600 V and less.
2. Surge protection devices.
3. Disconnecting and overcurrent protective devices.
4. Instrumentation.
5. Control power.
6. Accessory components and features.
7. Identification.
8. Mimic bus.

B. Related Requirements

1. Section 260573.19 "Electrical System Studies" for arc-flash analysis and arc-flash label requirements.

1.03 ACTION SUBMITTALS

A. Product Data: For each switchboard, overcurrent protective device, surge protection device, ground-fault protector, accessory, and component.

1. Include dimensions and manufacturers' technical data on features, performance, electrical characteristics, ratings, accessories, and finishes.

B. Shop Drawings: For each switchboard and related equipment.

1. Include dimensioned plans, elevations, sections, and details, including required clearances and service space around equipment. Show tabulations of installed devices, equipment features, and ratings.
2. Detail enclosure types for types other than NEMA 250, Type 1.

3. Detail bus configuration, current, and voltage ratings.

4. Detail short-circuit current rating of switchboards and overcurrent protective devices.

5. Include descriptive documentation of optional barriers specified for electrical insulation and isolation.

6. Detail private metering provisions.

7. Detail features, characteristics, ratings, and factory settings of individual overcurrent protective devices and auxiliary components.

8. Include time-current coordination curves for each type and rating of overcurrent protective device included in switchboards. Submit on translucent log-log graft paper; include selectable ranges for each type of overcurrent protective device.

C. Delegated Design Submittal:

1. For arc-flash hazard analysis.

2. For arc-flash labels.

1.04 INFORMATIONAL SUBMITTALS

A. Seismic Qualification Data: Certificates, for switchboards, overcurrent protective devices, accessories, and components, from manufacturer.

1. Basis for Certification: Indicate whether withstand certification is based on actual test of assembled components or on calculation.

2. Dimensioned Outline Drawings of Equipment Unit: Identify center of gravity and locate and describe mounting and anchorage provisions.

3. Detailed description of equipment anchorage devices on which the certification is based and their installation requirements.

B. Field Quality-Control Reports:

1. Test procedures used.

2. Test results that comply with requirements.

3. Results of failed tests and corrective action taken to achieve test results that comply with requirements.

1.05 CLOSEOUT SUBMITTALS

A. Operation and Maintenance Data: For switchboards and components to include in emergency, operation, and maintenance manuals.

1. In addition to items specified in Section 017823 "Operation and Maintenance Data," include the following:
    a. Routine maintenance requirements for switchboards and all installed components.
    b. Manufacturer's written instructions for testing and adjusting overcurrent protective devices.
    c. Time-current coordination curves for each type and rating of overcurrent protective device included in switchboards. Submit on translucent log-log graft paper; include selectable ranges for each type of overcurrent protective device.

1.06 MAINTENANCE MATERIAL SUBMITTALS

A. Furnish extra materials that match products installed and that are packaged with protective covering for storage and identified with labels describing contents.

1. Potential Transformer Fuses: Equal to 10 percent of quantity installed for each size and type but no fewer than two of each size and type.

2. Control-Power Fuses: Equal to 10 percent of quantity installed for each size and type, but no fewer than two of each size and type.

3. Indicating Lights: Equal to 10 percent of quantity installed for each size and type but no less than one of each size and type.

1.07 QUALITY ASSURANCE

A. Installer Qualifications: An employer of workers qualified as defined in NEMA PB 2.1 and trained in electrical safety as required by NFPA 70E.

1.08 DELIVERY, STORAGE, AND HANDLING

A. Deliver switchboards in sections or lengths that can be moved past obstructions in delivery path.

B. Remove loose packing and flammable materials from inside switchboards and install temporary electric heating (250 W per section) to prevent condensation.

C. Handle and prepare switchboards for installation according to NEMA PB 2.1.

1.09 FIELD CONDITIONS

A. Installation Pathway: Remove and replace access fencing, doors, lift-out panels, and structures to provide pathway for moving switchboards into place.

B. Environmental Limitations:

1. Do not deliver or install switchboards until spaces are enclosed and weathertight, wet work in spaces is complete and dry, work above switchboards is complete, and temporary HVAC system is operating and maintaining ambient temperature

and humidity conditions at occupancy levels during the remainder of the construction period.

2. Rate equipment for continuous operation under the following conditions unless otherwise indicated:
   a. Ambient Temperature: Not exceeding 104 deg F.
   b. Altitude: Not exceeding 5500 feet.

C. Interruption of Existing Electric Service: Do not interrupt electric service to facilities occupied by Owner or others unless permitted under the following conditions and then only after arranging to provide temporary electric service according to requirements indicated:

1. Notify Engineer, Construction Manager, and Owner no fewer than seven days in advance of proposed interruption of electric service.

2. Indicate method of providing temporary electric service.

3. Do not proceed with interruption of electric service without written permission.

4. Comply with NFPA 70E.

1.10 COORDINATION

A. Coordinate layout and installation of switchboards and components with other construction that penetrates walls or is supported by them, including electrical and other types of equipment, raceways, piping, encumbrances to workspace clearance requirements, and adjacent surfaces. Maintain required workspace clearances and required clearances for equipment access doors and panels.

B. Coordinate sizes and locations of concrete bases with actual equipment provided. Cast anchor-bolt inserts into bases. Concrete, reinforcement, and formwork requirements are specified with concrete.

1.11 WARRANTY

A. Manufacturer's Warranty: Manufacturer agrees to repair or replace switchboard enclosures, buswork, overcurrent protective devices, accessories, and factory installed interconnection wiring that fail in materials or workmanship within specified warranty period.

1. Warranty Period: Three years from date of Substantial Completion.

PART 2 - PRODUCTS

2.01 PERFORMANCE REQUIREMENTS

A. Seismic Performance: Switchboards shall withstand the effects of earthquake motions determined according to ASCE/SEI 7.

1. Basis for Certification: Indicate whether withstand certification is based on actual test of assembled components or on calculation. Shake-table testing shall comply with ICC-ES AC156.

2. The term "withstand" means "the unit will remain in place without separation of any parts from the device when subjected to the seismic forces specified."

2.02 SWITCHBOARDS

A. Source Limitations: Obtain switchboards, overcurrent protective devices, components, and accessories from single source from single manufacturer.

B. Electrical Components, Devices, and Accessories: Listed and labeled as defined in NFPA 70, by a qualified testing agency, and marked for intended location and application.

C. Comply with NEMA PB 2.

D. Comply with NFPA 70.

E. Comply with UL 891.

F. Front-Connected, Front-Accessible Switchboards:

1. Main Devices: Panel mounted.

2. Branch Devices: Panel mounted.

3. Sections front and rear aligned.

G. Nominal System Voltage: 480Y/277V or 208Y/120V as stated on schedule.

H. Main-Bus Continuous: Amperage as stated on schedules.

I. Seismic Requirements: Fabricate and test switchboards according to IEEE 344 to withstand seismic forces defined in Section 260548.16 "Seismic Controls for Electrical Systems."

1. Basis for Certification: Indicate whether withstand certification is based on actual test of assembled components or on calculation. Shake-table testing shall comply with ICC-ES AC156.

a. The term "withstand" means "the unit will remain in place without separation of any parts from the device when subjected to the seismic forces specified."

J. Indoor Enclosures: Steel, NEMA 250, Type 1.

K. Enclosure Finish for Indoor Units: Factory-applied finish in manufacturer's standard gray finish over a rust-inhibiting primer on treated metal surface.

L. Outdoor Enclosures: Type 3R.

1. Finish: Factory-applied finish in manufacturer's Desert ‘tan’ color; undersurfaces treated with corrosion-resistant undercoating.

2. Enclosure: Downward, rearward sloping roof; bolt-on rear covers for each section, with provisions for padlocking.

M. Barriers: Between adjacent switchboard sections where noted.

N. Service Entrance Rating: Switchboards intended for use as service entrance equipment shall contain from one to six service disconnecting means with overcurrent protection, a neutral bus with disconnecting link, a grounding electrode conductor terminal, and a main bonding jumper.

O. Customer Metering Compartment: A separate customer metering compartment and section with front hinged door, for indicated metering, and current transformers for each meter. Current transformer secondary wiring shall be terminated on shorting-type terminal blocks. Include potential transformers having primary and secondary fuses with disconnecting means and secondary wiring terminated on terminal blocks.

P. Bus Transition and Incoming Pull Sections (where noted): Matched and aligned with basic switchboard.

Q. Hinged Front Panels: Allow access to circuit breaker, metering, accessory, and blank compartments.

R. Buses and Connections: Three phase, four wire unless otherwise indicated.

1. Provide phase bus arrangement A, B, C from front to back, top to bottom, and left to right when viewed from the front of the switchboard.

2. Phase- and Neutral-Bus Material: Hard-drawn copper of 98 percent conductivity, silver-plated.

3. Copper feeder circuit-breaker line connections.

4. Tin-plated aluminum feeder circuit-breaker line connections.

5. Ground Bus: 1/4-by-2-inch- hard-drawn copper of 98 percent conductivity, equipped with mechanical connectors for feeder and branch-circuit ground conductors.

6. Main-Phase Buses and Equipment-Ground Buses: Uniform capacity for entire length of switchboard's main and distribution sections. Provide for future extensions from both ends.

7. Disconnect Links:
   a. Isolate neutral bus from incoming neutral conductors.
   b. Bond neutral bus to equipment-ground bus for switchboards utilized as service equipment or separately derived systems.

8. Neutral Buses: 100 percent of the ampacity of phase buses unless otherwise indicated, equipped with mechanical connectors for outgoing circuit neutral cables. Brace bus extensions for busway feeder neutral bus.

S. Future Devices: Equip compartments with mounting brackets, supports, bus connections, and appurtenances at full rating of circuit-breaker compartment.

2.03 SURGE PROTECTION DEVICES

A. SPDs: Comply with UL 1449, Type 1.

B. Features and Accessories:

1. Integral disconnect switch.

2. Internal thermal protection that disconnects the SPD before damaging internal suppressor components.

3. Indicator light display for protection status.

4. Form-C contacts rated at 5 A and 250-V ac, one normally open and one normally closed, for remote monitoring of protection status. Contacts shall reverse on failure of any surge diversion module or on opening of any current-limiting device. Coordinate with building power monitoring and control system.

5. Surge counter.

C. Peak Surge Current Rating: The minimum single-pulse surge current withstand rating per phase shall not be less than 200 kA. The peak surge current rating shall be the arithmetic sum of the ratings of the individual MOVs in a given mode.

D. Protection modes and UL 1449 VPR for grounded wye circuits with 480Y/277 V or 208Y/120 V, three-phase, four-wire circuits shall not exceed the following:

1. Line to Neutral: 1200 V for 480Y/277 V and 700 V for 208Y/120 V.

2. Line to Ground: 1200 V for 480Y/277 V and 1200 V for 208Y/120 V.

3. Line to Line: 2000 V for 480Y/277 V and 1000 V for 208Y/120 V.

E. SCCR: Equal or exceed 200 kA.

F. Nominal Rating: 20 kA.

2.04 DISCONNECTING AND OVERCURRENT PROTECTIVE DEVICES

A. Molded-Case Circuit Breaker (MCCB): Comply with UL 489, with interrupting capacity to meet available fault currents.

1. Thermal-Magnetic Circuit Breakers: Inverse time-current element for low-level overloads and instantaneous magnetic trip element for short circuits. Adjustable magnetic trip setting for circuit-breaker frame sizes 250 A and larger.

2. Adjustable Instantaneous-Trip Circuit Breakers: Magnetic trip element with front-mounted, field-adjustable trip setting.

3. Electronic trip circuit breakers with rms sensing; field-replaceable rating plug or field-replicable electronic trip; and the following field-adjustable settings:
   a. Instantaneous trip.
   b. Long- and short-time pickup levels.
   c. Long and short time adjustments.
   d. Ground-fault pickup level, time delay, and I squared t response.

4. Current-Limiting Circuit Breakers: Frame sizes 400 A and smaller; let-through ratings less than NEMA FU 1, RK-5.

5. Integrally Fused Circuit Breakers: Thermal-magnetic trip element with integral limiter-style fuse listed for use with circuit breaker; trip activation on fuse opening or on opening of fuse compartment door.

6. MCCB Features and Accessories:
   a. Standard frame sizes, trip ratings, and number of poles.
   b. Lugs: Mechanical style, suitable for number, size, trip ratings, and conductor material.
   c. Application Listing: Appropriate for application; Type SWD for switching fluorescent lighting loads; Type HID for feeding fluorescent and high-intensity discharge (HID) lighting circuits.
   d. Ground-Fault Protection: Integrally mounted relay and trip unit with adjustable pickup and time-delay settings, push-to-test feature, and ground-fault indicator.
   e. Zone-Selective Interlocking: Integral with electronic trip unit; for interlocking ground-fault protection function.
   f. Communication Capability: Integral communication module with functions and features compatible with power monitoring and control system specified in Section 260913 "Electrical Power Monitoring and Control."
   g. Shunt Trip: 120-V trip coil energized from separate circuit, set to trip at 55 percent of rated voltage.
   h. Undervoltage Trip: Set to operate at 35 to 75 percent of rated voltage without intentional time delay.
   i. Auxiliary Contacts: Two SPDT switches with "a" and "b" contacts; "a" contacts mimic circuit-breaker contacts, "b" contacts operate in reverse of circuit-breaker contacts.

2.05 INSTRUMENTATION

A. Instrument Transformers: NEMA EI 21.1, and the following:

1. Current Transformers: NEMA EI 21.1; 5 A, 60 Hz, secondary; bar or window type; single secondary winding and secondary shorting device. Burden and accuracy shall be consistent with connected metering and relay devices.

2. Control-Power Transformers: Dry type, mounted in separate compartments for units larger than 3 kVA.

3. Current Transformers for Neutral and Ground-Fault Current Sensing: Connect secondary wiring to ground overcurrent relays, via shorting terminals, to provide selective tripping of main and tie circuit breaker. Coordinate with feeder circuit-breaker, ground-fault protection.

B. Multifunction Digital-Metering Monitor: Microprocessor-based unit suitable for three- or four-wire systems and with the following features:

1. Switch-selectable digital display of the following values with maximum accuracy tolerances as indicated:
   a. Phase Currents, Each Phase: Plus or minus 0.5 percent.
   b. Phase-to-Phase Voltages, Three Phase: Plus or minus 0.5 percent.
   c. Phase-to-Neutral Voltages, Three Phase: Plus or minus 0.5 percent.
   d. Megawatts: Plus or minus 1 percent.
   e. Megavars: Plus or minus 1 percent.
   f. Power Factor: Plus or minus 1 percent.
   g. Frequency: Plus or minus 0.1 percent.
   h. Accumulated Energy, Megawatt Hours: Plus or minus 1 percent; accumulated values unaffected by power outages up to 72 hours.
   i. Contact devices to operate remote impulse-totalizing demand meter.

2. Mounting: Display and control unit flush or semiflush mounted in instrument compartment door..

3. BACnet output module and IP addressable Ethernet connection

2.06 CONTROL POWER

A. Control Circuits: 120-V ac, supplied through secondary disconnecting devices from control-power transformer.

B. Control Wiring: Factory installed, with bundling, lacing, and protection included. Provide flexible conductors for No. 8 AWG and smaller, for conductors across hinges, and for conductors for interconnections between shipping units.

2.07 ACCESSORY COMPONENTS AND FEATURES

A. Accessory Set: Include tools and miscellaneous items required for overcurrent protective device test, inspection, maintenance, and operation.

B. Portable Test Set: For testing functions of solid-state trip devices without removing from switchboard. Include relay and meter test plugs suitable for testing switchboard meters and switchboard class relays.

2.08 IDENTIFICATION

A. Service Equipment Label: NRTL labeled for use as service equipment for switchboards with one or more service disconnecting and overcurrent protective devices.

PART 3 - EXECUTION

3.01 EXAMINATION

A. Receive, inspect, handle, and store switchboards according to NEMA PB 2.1.

1. Lift or move panelboards with spreader bars and manufacturer-supplied lifting straps following manufacturer's instructions.

2. Use rollers, slings, or other manufacturer-approved methods if lifting straps are not furnished.

3. Protect from moisture, dust, dirt, and debris during storage and installation.

4. Install temporary heating during storage per manufacturer's instructions.

B. Examine switchboards before installation. Reject switchboards that are moisture damaged or physically damaged.

C. Examine elements and surfaces to receive switchboards for compliance with installation tolerances and other conditions affecting performance of the Work or that affect the performance of the equipment.

D. Proceed with installation only after unsatisfactory conditions have been corrected.

3.02 INSTALLATION

A. Install switchboards and accessories according to NEMA PB 2.1.

B. Equipment Mounting: Install switchboards on concrete base, 4-inch nominal thickness. Comply with requirements for concrete base specified in Section 033000 "Cast-in-Place Concrete."

1. Install conduits entering underneath the switchboard, entering under the vertical section where the conductors will terminate. Install with couplings flush with the concrete base. Extend 2 inches above concrete base after switchboard is anchored in place.

2. Install dowel rods to connect concrete base to concrete floor. Unless otherwise indicated, install dowel rods on 18-inch centers around the full perimeter of concrete base.

3. For supported equipment, install epoxy-coated anchor bolts that extend through concrete base and anchor into structural concrete floor.

4. Place and secure anchorage devices. Use setting drawings, templates, diagrams, instructions, and directions furnished with items to be embedded.

5. Install anchor bolts to elevations required for proper attachment to switchboards.

6. Anchor switchboard to building structure at the top of the switchboard if required or recommended by the manufacturer.

C. Temporary Lifting Provisions: Remove temporary lifting eyes, channels, straps and brackets, and temporary blocking of moving parts from switchboard units and components.

D. Install filler plates in unused spaces of panel-mounted sections.

E. Install overcurrent protective devices, surge protection devices, and instrumentation.

1. Set field-adjustable switches and circuit-breaker trip ranges.

F. Comply with NECA 1.

3.03 CONNECTIONS

A. Bond conduits entering underneath the switchboard to the equipment ground bus with a bonding conductor sized per NFPA 70.

B. Support and secure conductors within the switchboard according to NFPA 70.

C. Extend insulated equipment grounding cable to busway ground connection and support cable at intervals in vertical run.

3.04 IDENTIFICATION

A. Identify field-installed conductors, interconnecting wiring, and components; provide warning signs complying with requirements for identification specified in Section 260553 "Identification for Electrical Systems."

B. Switchboard Nameplates: Label each switchboard compartment with a nameplate complying with requirements for identification specified in Section 260553 "Identification for Electrical Systems."

C. Device Nameplates: Label each disconnecting and overcurrent protective device and each meter and control device mounted in compartment doors with a nameplate complying with requirements for identification specified in Section 260553 "Identification for Electrical Systems."

3.05 FIELD QUALITY CONTROL

A. Manufacturer's Field Service: Engage a factory-authorized service representative to test and inspect components, assemblies, and equipment installations, including connections.

B. Perform tests and inspections with the assistance of a factory-authorized service representative.

C. Tests and Inspections:

1. Acceptance Testing:
   a. Test insulation resistance for each switchboard bus, component, connecting supply, feeder, and control circuit. Open control and metering circuits within the switchboard, and remove neutral connection to surge protection and other electronic devices prior to insulation test. Reconnect after test.
   b. Test continuity of each circuit.

2. Test ground-fault protection of equipment for service equipment per NFPA 70.

3. Perform each visual and mechanical inspection and electrical test stated in NETA Acceptance Testing Specification. Certify compliance with test parameters.

4. Correct malfunctioning units on-site where possible, and retest to demonstrate compliance; otherwise, replace with new units and retest.

5. Perform the following infrared scan tests and inspections, and prepare reports:
   a. Initial Infrared Scanning: After Substantial Completion, but not more than 60 days after Final Acceptance, perform an infrared scan of each switchboard. Remove front panels so joints and connections are accessible to portable scanner.
   b. Follow-up Infrared Scanning: Perform an additional follow-up infrared scan of each switchboard 11 months after date of Substantial Completion.
   c. Instruments and Equipment:
      1. Use an infrared scanning device designed to measure temperature or to detect significant deviations from normal values. Provide calibration record for device.

6. Test and adjust controls, remote monitoring, and safeties. Replace damaged and malfunctioning controls and equipment.

D. Switchboard will be considered defective if it does not pass tests and inspections.

E. Prepare test and inspection reports, including a certified report that identifies switchboards included and that describes scanning results. Include notation of deficiencies detected, remedial action taken, and observations after remedial action.

3.06 ADJUSTING

A. Adjust moving parts and operable components to function smoothly, and lubricate as recommended by manufacturer.

B. Set field-adjustable circuit-breaker trip ranges as specified in Section 260573.16 "Coordination Studies."

3.07 PROTECTION

A. Temporary Heating: Apply temporary heat, to maintain temperature according to manufacturer's written instructions, until switchboard is ready to be energized and placed into service.

3.08 DEMONSTRATION

A. Train Owner's maintenance personnel to adjust, operate, and maintain switchboards, overcurrent protective devices, instrumentation, and accessories.

END OF SECTION

26 24 13

THIS PAGE IS BLANK

26 24 16

PANELBOARDS

PART 1 - GENERAL

1.01 RELATED DOCUMENTS

A. Drawings and general provisions of the Contract, including General and Supplementary Conditions and Division 01 Specification Sections, apply to this Section.

1.02 SUMMARY

A. Section Includes:
1. Distribution panelboards.
2. Lighting and appliance branch-circuit panelboards.
3. Electronic-grade panelboards.

1.03 DEFINITIONS

A. TVSS: Transient voltage surge suppressor.

B. SPD: Surge protection device

1.04 PERFORMANCE REQUIREMENTS

A. Seismic Performance: Panelboards shall withstand the effects of earthquake motions determined according to SEI/ASCE 7.
1. The term "withstand" means the unit will remain in place without separation of any parts from the device when subjected to the seismic forces specified.

1.05 SUBMITTALS

A. Product Data: For each type of panelboard, switching and overcurrent protective device, transient voltage suppression device, accessory, and component indicated. Include dimensions and manufacturers' technical data on features, performance, electrical characteristics, ratings, and finishes.

B. Shop Drawings: For each panelboard and related equipment.
1. Include dimensioned plans, elevations, sections, and details. Show tabulations of installed devices, equipment features, and ratings.
2. Detail enclosure types and details for types other than NEMA 250, Type 1.
3. Detail bus configuration, current, and voltage ratings.
4. Short-circuit current rating of panelboards and overcurrent protective devices.
5. Include evidence of NRTL listing for series rating of installed devices.
6. Detail features, characteristics, ratings, and factory settings of individual overcurrent protective devices and auxiliary components.
7. Include wiring diagrams for power, signal, and control wiring.

8. Include time-current coordination curves for each type and rating of overcurrent protective device included in panelboards. Submit on translucent log-log graft paper; include selectable ranges for each type of overcurrent protective device.

C. Seismic Qualification Certificates: Submit certification that panelboards, overcurrent protective devices, accessories, and components will withstand seismic forces defined in Division 26 Section "Vibration and Seismic Controls for Electrical Systems." Include the following:
1. Basis for Certification: Indicate whether withstand certification is based on actual test of assembled components or on calculation.
2. Dimensioned Outline Drawings of Equipment Unit: Identify center of gravity and locate and describe mounting and anchorage provisions.
3. Detailed description of equipment anchorage devices on which the certification is based and their installation requirements.

D. Field Quality-Control Reports:
1. Test procedures used.
2. Test results that comply with requirements.
3. Results of failed tests and corrective action taken to achieve test results that comply with requirements.

E. Panelboard Schedules: For installation in panelboards.

F. Operation and Maintenance Data: For panelboards and components to include in emergency, operation, and maintenance manuals. In addition to items specified in Division 01 Section "Operation and Maintenance Data," include the following:
1. Manufacturer's written instructions for testing and adjusting overcurrent protective devices.
2. Time-current curves, including selectable ranges for each type of overcurrent protective device that allows adjustments.

1.06 QUALITY ASSURANCE

A. Source Limitations: Obtain panelboards, overcurrent protective devices, components, and accessories from single source from single manufacturer.

B. Product Selection for Restricted Space: Drawings indicate maximum dimensions for panelboards including clearances between panelboards and adjacent surfaces and other items. Comply with indicated maximum dimensions.

C. Electrical Components, Devices, and Accessories: Listed and labeled as defined in NFPA 70, by a qualified testing agency, and marked for intended location and application.

D. Comply with NEMA PB 1.

E. Comply with NFPA 70.

1.07 DELIVERY, STORAGE, AND HANDLING

A. Remove loose packing and flammable materials from inside panelboards; install temporary electric heating (250 W per panelboard) to prevent condensation.

B. Handle and prepare panelboards for installation according to NEMA PB 1.

1.08 PROJECT CONDITIONS

A. Environmental Limitations:
1. Do not deliver or install panelboards until spaces are enclosed and weathertight, wet work in spaces is complete and dry, work above panelboards is complete, and temporary HVAC system is operating and maintaining ambient temperature and humidity conditions at occupancy levels during the remainder of the construction period.
2. Rate equipment for continuous operation under the following conditions unless otherwise indicated:
   a. Ambient Temperature: Not exceeding 23 deg F (minus 5 deg C) to plus 104 deg F (plus 40 deg C).
   b. Altitude: Not exceeding 6600 feet.

B. Service Conditions: NEMA PB 1, usual service conditions, as follows:
1. Ambient temperatures within limits specified.
2. Altitude not exceeding 6600 feet.

C. Interruption of Existing Electric Service: Do not interrupt electric service to facilities occupied by Owner or others unless permitted under the following conditions and then only after arranging to provide temporary electric service according to requirements indicated:
1. Notify Engineer\Construction Manager\Owner no fewer than seven days in advance of proposed interruption of electric service.
2. Do not proceed with interruption of electric service without written permission.
3. Comply with NFPA 70E.

1.09 COORDINATION

A. Coordinate layout and installation of panelboards and components with other construction that penetrates walls or is supported by them, including electrical and other types of equipment, raceways, piping, encumbrances to workspace clearance requirements, and adjacent surfaces. Maintain required workspace clearances and required clearances for equipment access doors and panels.

B. Free standing equipment: Coordinate sizes and locations of concrete bases with actual equipment provided. Cast anchor-bolt inserts into bases. Concrete, reinforcement, and formwork requirements are specified in Division 03.

1.10 WARRANTY

A. Special Warranty: Manufacturer's standard form in which manufacturer agrees to repair or replace transient voltage suppression devices that fail in materials or workmanship within specified warranty period.

1. Warranty Period: Five years from date of Substantial Completion.

1.11 EXTRA MATERIALS

A. Furnish extra materials that match products installed and that are packaged with protective covering for storage and identified with labels describing contents.
   1. Keys: Two spares for each type of panelboard cabinet lock.
   2. Circuit Breakers: In addition to any spares indicated installed in the panel per the panel schedule, provide GFCI and Ground Fault Equipment Protection (GFEP) Types: Two spares for each panelboard.

PART 2 - PRODUCTS

2.01 GENERAL REQUIREMENTS FOR PANELBOARDS

A. Fabricate and test panelboards according to IEEE 344 to withstand seismic forces defined in Division 26 Section "Vibration and Seismic Controls for Electrical Systems."

B. Enclosures: Flush mounted cabinets unless otherwise noted; coordinate with plans.
   1. Rated for environmental conditions at installed location.
      a. Indoor Dry and Clean Locations: NEMA 250, Type 1.
      b. Outdoor Locations: NEMA 250, Type 3R.
      c. Kitchen Areas: NEMA 250, Type 4X, stainless steel.
      d. Other Wet or Damp Indoor Locations: NEMA 250, Type 4.
      e. Indoor Locations Subject to Dust, Falling Dirt, and Dripping Noncorrosive Liquids: NEMA 250, Type 12.
   2. Hinged Front Cover: Entire front trim hinged to box and with standard door within hinged trim cover.
   3. Where noted on documents:
      a. Skirt for Surface-Mounted Panelboards: Same gage and finish as panelboard front with flanges for attachment to panelboard, wall, and ceiling or floor.
      b. Gutter Extension and Barrier: Same gage and finish as panelboard enclosure; integral with enclosure body. Arrange to isolate individual panel sections.
   4. Finishes:
      a. Panels and Trim: Steel, factory finished immediately after cleaning and pretreating with manufacturer's standard two-coat, baked-on finish consisting of prime coat and thermosetting topcoat.
      b. Recessed Back Boxes: Galvanized steel.
      c. Surface mounted Back Boxes: Galvanized steel, same finish as panels and trim.
   5. Directory Card: Inside panelboard door, mounted in metal frame with transparent protective cover.

C. Incoming Mains Location: Top and bottom, coordinate with each specific panel and location.

D. Phase, Neutral, and Ground Buses:
   1. Material: Hard-drawn copper, 98 percent conductivity.
   2. Equipment Ground Bus: Adequate for feeder and branch-circuit equipment grounding conductors; bonded to box.
   3. Where indicated on documents:
      a. Isolated Ground Bus: Adequate for branch-circuit isolated ground conductors; insulated from box.
      b. Extra-Capacity Neutral Bus: Neutral bus rated 200 percent of phase bus and UL listed as suitable for nonlinear loads.

E. Conductor Connectors: Suitable for use with conductor material and sizes.
   1. All connectors are to be rated for copper and aluminum conductors
   2. Material: Tin-plated aluminum.
   3. Main and Neutral Lugs: Mechanical type.
   4. Ground Lugs and Bus-Configured Terminators: Mechanical type.
   5. Where indicated on documents:
      a. Feed-Through Lugs: Mechanical type, suitable for use with conductor material. Locate at opposite end of bus from incoming lugs or main device.
      b. Subfeed (Double) Lugs: Mechanical type suitable for use with conductor material. Locate at same end of bus as incoming lugs or main device, unless noted otherwise.
      c. Extra-Capacity Neutral Lugs: Rated 200 percent of phase lugs mounted on extra-capacity neutral bus.

F. Service Equipment Label: For equipment used as service entrance, NRTL labeled for use as service equipment for panelboards with one or more main service disconnecting and overcurrent protective devices.

G. Future Devices: Mounting brackets, bus connections, filler plates, and necessary appurtenances required for future installation of devices.

H. Panelboard Short-Circuit Current Rating: Fully rated to interrupt symmetrical short-circuit current available at terminals.

2.02 DISTRIBUTION PANELBOARDS

A. Manufacturers: Subject to compliance with requirements, provide products by one of the following:
   1. Eaton Electrical Inc.; Cutler-Hammer Business Unit.
   2. General Electric Company; GE Consumer & Industrial - Electrical Distribution.
   3. Siemens Energy & Automation, Inc.
   4. Square D; a brand of Schneider Electric.

B. Panelboards: NEMA PB 1, power and feeder distribution type.

C. Doors: Secured with vault-type latch with tumbler lock; keyed alike.
   1. For doors more than 36 inches high, provide two latches, keyed alike.

D. Mains: Circuit breaker or Lugs only as indicated on documents.

E. Branch Overcurrent Protective Devices for Circuit-Breaker Frame Sizes 125 A and Smaller: Bolt-on circuit breakers.

F. Branch Overcurrent Protective Devices for Circuit-Breaker Frame Sizes Larger Than 125 A: Bolt-on circuit breakers; plug-in circuit breakers where individual positive-locking device requires mechanical release for removal.

G. Where indicated on documents:
1. Contactors in Main Bus: NEMA ICS 2, Class A, [electrically] [mechanically] held, general-purpose controller, with same short-circuit interrupting rating as panelboard.
   a. Internal Control-Power Source: Control-power transformer, with fused primary and secondary terminals, connected to main bus ahead of contactor connection.
   b. External Control-Power Source: [120-V branch circuit] [24-V control circuit].

2.03 LIGHTING AND APPLIANCE BRANCH-CIRCUIT PANELBOARDS

A. Manufacturers: Subject to compliance with requirements, provide products by one of the following:
1. Eaton Electrical Inc.; Cutler-Hammer Business Unit.
2. General Electric Company; GE Consumer & Industrial - Electrical Distribution.
3. Siemens Energy & Automation, Inc.
4. Square D; a brand of Schneider Electric.

B. Panelboards: NEMA PB 1, lighting and appliance branch-circuit type.

C. Mains: Circuit breaker or lugs only as indicated on documents.

D. Branch Overcurrent Protective Devices: Bolt-on circuit breakers, replaceable without disturbing adjacent units.

E. Hinged Front Cover: Entire front trim hinged to box and with standard door within hinged trim cover.

F. Where indicated on documents:
1. Contactors in Main Bus: NEMA ICS 2, Class A, [electrically] [mechanically] held, general-purpose controller, with same short-circuit interrupting rating as panelboard.
   a. Internal Control-Power Source: Control-power transformer, with fused primary and secondary terminals, connected to main bus ahead of contactor connection.
   b. External Control-Power Source: [120-V branch circuit] [24-V control circuit] <Insert requirement>.
2. Column-Type Panelboards: Narrow gutter extension, with cover, to overhead junction box equipped with ground and neutral terminal buses.

2.04 DISCONNECTING AND OVERCURRENT PROTECTIVE DEVICES

A. Manufacturers: Subject to compliance with requirements, Provide products by one of the following
   1. Eaton Electrical Inc.; Cutler-Hammer Business Unit.
   2. General Electric Company; GE Consumer & Industrial - Electrical Distribution.
   3. Siemens Energy & Automation, Inc.
   4. Square D; a brand of Schneider Electric.

B. Molded-Case Circuit Breaker (MCCB): Comply with UL 489, with interrupting capacity to meet available fault currents.
   1. Thermal-Magnetic Circuit Breakers: Inverse time-current element for low-level overloads, and instantaneous magnetic trip element for short circuits. Adjustable magnetic trip setting for circuit-breaker frame sizes 250 A and larger.
   2. Adjustable Instantaneous-Trip Circuit Breakers: Magnetic trip element with front-mounted, field-adjustable trip setting.
   3. Electronic trip circuit breakers:
      a. Provide with rms sensing; field-replaceable rating plug or field-replicable electronic trip; and the following field-adjustable settings:
         1. Instantaneous trip.
         2. Long- and short-time pickup levels.
         3. Long- and short-time time adjustments.
         4. Ground-fault pickup level, time delay, and I2t response.
      b. Provide a Portable Test Set: For testing functions of solid-state trip devices without removing from panelboard. Include relay and meter test plugs suitable for testing panelboard meters and switchboard class relays
   4. Current-Limiting Circuit Breakers: Frame sizes 400 A and smaller; let-through ratings less than NEMA FU 1, RK-5.
   5. GFCI Circuit Breakers: Single- and two-pole configurations with Class A ground-fault protection (6-mA trip).
   6. Ground-Fault Equipment Protection (GFEP) Circuit Breakers: Class B ground-fault protection (30-mA trip).
   7. Arc-Fault Circuit Interrupter (AFCI) Circuit Breakers: Comply with UL 1699; 120/240-V, single-pole configuration.
   8. Molded-Case Circuit-Breaker (MCCB) Features and Accessories:
      a. Standard frame sizes, trip ratings, and number of poles.
      b. Lugs: Mechanical style, suitable for number, size, trip ratings, and conductor materials.
      c. Where indicated on documents
         1. Ground-Fault Protection: Integrally mounted relay and trip unit with adjustable pickup and time-delay settings, push-to-test feature, and ground-fault indicator.
         2. Shunt Trip: Coordinate trip coil voltage; energized from separate circuit, set to trip at 55-75 percent of rated voltage.
         3. Undervoltage Trip: Set to operate at 35 to 75 percent of rated voltage with field-adjustable 0.1- to 0.6-second time delay.
         4. Auxiliary Contacts: [One SPDT switch] [Two SPDT switches] with "a" and "b" contacts; "a" contacts mimic circuit-breaker

contacts and "b" contacts operate in reverse of circuit-breaker contacts.

5. Alarm Switch: Single-pole, normally open contact that actuates only when circuit breaker trips.
6. Key Interlock Kit: Externally mounted to prohibit circuit-breaker operation; key shall be removable only when circuit breaker is in off position.
7. Zone-Selective Interlocking: Integral with electronic trip unit; for interlocking ground-fault protection function with other upstream or downstream devices.
8. Multipole units enclosed in a single housing or factory assembled to operate as a single unit.
9. Handle Padlocking Device: Fixed attachment, for locking circuit-breaker handle in on or off position.
10. Handle Clamp: Loose attachment, for holding circuit-breaker handle in on position.

2.05 PANELBOARD SUPPRESSORS

A. Provide Surge Protection Devices where indicated on documents. SPD to meet the following requirements.

B. Manufacturers: Subject to compliance with requirements, provide products by one of the following:
1. Current Technology; a subsidiary of Danahar Corporation.
2. Eaton Electrical Inc.; Cutler-Hammer Business Unit.
3. General Electric Company; GE Consumer & Industrial - Electrical Distribution.
4. Liebert Corporation.
5. Siemens Energy & Automation, Inc.
6. Square D; a brand of Schneider Electric.

C. Surge Protection Device: IEEE C62.41-compliant, integrally mounted, bolt-on, solid-state, parallel-connected, with sine-wave tracking suppression and filtering modules, UL 1449, second edition, short-circuit current rating matching or exceeding the panelboard short-circuit rating, and with the following features and accessories:
1. Accessories:
   a. Fuses rated at 200-kA interrupting capacity.
   b. Fabrication using bolted compression lugs for internal wiring.
   c. Integral disconnect switch.
   d. Redundant suppression circuits.
   e. Redundant replaceable modules.
   f. Arrangement with wire connections to phase buses, neutral bus, and ground bus.
   g. LED indicator lights for power and protection status.
   h. Audible alarm, with silencing switch, to indicate when protection has failed.

i. Form-C contacts rated at 5 A and 250-V ac, one normally open and one normally closed, for remote monitoring of system operation. Contacts shall reverse position on failure of any surge diversion module or on opening of any current-limiting device. Coordinate with building power monitoring and control system.

j. Four or Six-digit, transient-event counter set to totalize transient surges.

2. Peak Single-Impulse Surge Current Rating: [160 kA per mode/320 kA per phase] [120 kA per mode/240 kA per phase] [80 kA per mode/160 kA per phase].
3. Minimum single-impulse current ratings, using 8-by-20-mic.sec. waveform described in IEEE C62.41.2.
   a. Line to Neutral: 70,000A.
   b. Line to Ground: 70,000A.
   c. Neutral to Ground: 50,000A.
4. Withstand Capabilities: 12,000 IEEE C62.41, Category C3 (10 kA), 8-by-20-mic.sec. surges with less than 5 percent change in clamping voltage.
5. Protection modes and UL 1449 SVR for grounded wye circuits with [480Y/277] [208Y/120]-V, three-phase, four-wire circuits shall be as follows:
   a. Line to Neutral: [800 V for 480Y/277] [400 V for 208Y/120].
   b. Line to Ground: [800 V for 480Y/277] [400 V for 208Y/120].
   c. Neutral to Ground: [800 V for 480Y/277] [400 V for 208Y/120].
6. Protection modes and UL 1449 SVR for 240/120-V, single-phase, three-wire circuits shall be as follows:
   a. Line to Neutral: 400 V.
   b. Line to Ground: 400 V.
   c. Neutral to Ground: 400 V.
7. Protection modes and UL 1449 SVR for 240/120-V, three-phase, four-wire circuits with high leg shall be as follows:
   a. Line to Neutral: 400 V, 800 V from high leg.
   b. Line to Ground: 400 V.
   c. Neutral to Ground: 400 V.

PART 3 - EXECUTION

3.01 EXAMINATION

A. Receive, inspect, handle, and store panelboards according to NEMA PB 1.1.

B. Examine panelboards before installation. Reject panelboards that are damaged or rusted or have been subjected to water saturation.

C. Examine elements and surfaces to receive panelboards for compliance with installation tolerances and other conditions affecting performance of the Work.

D. Proceed with installation only after unsatisfactory conditions have been corrected.

3.02 INSTALLATION

A. Install panelboards and accessories according to NEMA PB 1.1.

B. Floor mounted and free-standing units:
   1. Equipment Mounting: Install panelboards on concrete bases, 4-inch nominal thickness. Comply with requirements for concrete base specified in Division 03 Section "Cast-in-Place Concrete."
      a. Install dowel rods to connect concrete base to concrete floor. Unless otherwise indicated, install dowel rods on 18-inch centers around full perimeter of base.
      b. For panelboards, install epoxy-coated anchor bolts that extend through concrete base and anchor into structural concrete floor.
      c. Place and secure anchorage devices. Use setting drawings, templates, diagrams, instructions, and directions furnished with items to be embedded.
      d. Install anchor bolts to elevations required for proper attachment to panelboards.
      e. Attach panelboard to the vertical finished or structural surface behind the panelboard.
   2. Temporary Lifting Provisions: Remove temporary lifting eyes, channels, and brackets and temporary blocking of moving parts from panelboards.

C. Comply with mounting and anchoring requirements specified in Division 26 Section "Vibration and Seismic Controls for Electrical Systems."

D. Mount top of trim 90 inches above finished floor unless otherwise indicated.
   1. Adjust and confirm mounting height such that the operating handle of the top most device is not higher than 79-inches above finished floor

E. Mount panelboard cabinet plumb and rigid without distortion of box. Mount recessed panelboards with fronts uniformly flush with wall finish and mating with back box.

F. Install overcurrent protective devices and controllers not already factory installed.
   1. Set field-adjustable, circuit-breaker trip ranges.

G. Install filler plates in unused spaces.

H. For recessed panels, stub four 1-inch empty conduits from panelboard into accessible ceiling space or space designated to be ceiling space in the future. Stub four 1-inch empty conduits into raised floor space or below slab not on grade.

I. Arrange conductors in gutters into groups and bundle and wrap with wire ties.

J. Comply with NECA 1.

3.03 IDENTIFICATION

A. Identify field-installed conductors, interconnecting wiring, and components; provide warning signs complying with Division 26 Section "Identification for Electrical Systems."

B. Create a directory to indicate installed circuit loads; incorporate Owner's final room designations. Obtain approval before installing. Use a computer or typewriter to create directory; handwritten directories are not acceptable.

C. Panelboard Nameplates: Label each panelboard with a nameplate complying with requirements for identification specified in Division 26 Section "Identification for Electrical Systems."

3.04 FIELD QUALITY CONTROL

A. Perform tests and inspections.
   1. Inspect components, assemblies, and equipment installations, including connections.

B. Acceptance Testing Preparation:
   1. Test insulation resistance for each panelboard bus, component, connecting supply, feeder, and control circuit.
   2. Test continuity of each circuit.

C. Tests and Inspections:
   1. Perform each visual and mechanical inspection and electrical test stated in NETA Acceptance Testing Specification. Certify compliance with test parameters.
   2. Correct malfunctioning units on-site, where possible, and retest to demonstrate compliance; otherwise, replace with new units and retest.
   3. Perform the following infrared scan tests and inspections and prepare reports:
      a. Initial Infrared Scanning: After Substantial Completion, but not more than 60 days after Final Acceptance, perform an infrared scan of each panelboard. Remove front panels so joints and connections are accessible to portable scanner.
      b. Follow-up Infrared Scanning: Perform an additional follow-up infrared scan of each panelboard 11 months after date of Substantial Completion.
      c. Instruments and Equipment:
         1. Use an infrared scanning device designed to measure temperature or to detect significant deviations from normal values. Provide calibration record for device.

D. Panelboards will be considered defective if they do not pass tests and inspections.

E. Prepare test and inspection reports, including a certified report that identifies panelboards included and that describes scanning results. Include notation of deficiencies detected, remedial action taken, and observations after remedial action.

3.05 ADJUSTING

A. Adjust moving parts and operable component to function smoothly, and lubricate as recommended by manufacturer.

B. Set field-adjustable circuit-breaker trip ranges as specified in Division 26 Section "Overcurrent Protective Device Coordination Study."

3.06 PROTECTION

A. Temporary Heating: Apply temporary heat to maintain temperature according to manufacturer's written instructions.

END OF SECTION

26 24 16

26 27 26

WIRING DEVICES

PART 1 - GENERAL

1.01 RELATED DOCUMENTS

A. Drawings and general provisions of the Contract, including General and Supplementary Conditions and Division 01 Specification Sections, apply to this Section.

1.02 SUMMARY

A. Section Includes:

1. Standard-grade receptacles, 125 V, 20A.
2. USB receptacles.
3. GFCI receptacles, 125 V, 20 A.
4. Twist-locking receptacles.
5. Pendant cord-connector devices.
6. Cord and plug sets.
7. Toggle switches, 120/277 V, 20A.
8. Occupancy sensors.
9. Wall-box dimmers.
10. Wall plates.
11. Prefabricated multioutlet assemblies.

1.03 DEFINITIONS

A. AFCI: Arc-fault circuit interrupter.

B. BAS: Building automation system.

C. EMI: Electromagnetic interference.

D. GFCI: Ground-fault circuit interrupter.

E. Pigtail: Short lead used to connect a device to a branch-circuit conductor.

F. SPD: Surge protective device.

1.04 ACTION SUBMITTALS

A. Product Data: For each type of product.

B. Shop Drawings: List of legends and description of materials and process used for premarking wall plates.

C. Samples: One for each type of device and wall plate specified, in each color specified.

1.05 INFORMATIONAL SUBMITTALS

A. Field quality-control reports.

1.06 CLOSEOUT SUBMITTALS

A. Operation and Maintenance Data: For wiring devices to include in all manufacturers' packing-label warnings and instruction manuals that include labeling conditions.

1.07 MAINTENANCE MATERIAL SUBMITTALS

A. Furnish extra materials that match products installed and that are packaged with protective covering for storage and identified with labels describing contents.

1. SPD Receptacles: One for every 10of each type installed, but no fewer than five of each type.

PART 2 - PRODUCTS

2.01 GENERAL WIRING-DEVICE REQUIREMENTS

A. Wiring Devices, Components, and Accessories: Listed and labeled as defined in NFPA 70, by a qualified testing agency, and marked for intended location and use.

B. Comply with NFPA 70.

C. Comply with NEMA WD 1.

D. Devices for Owner-Furnished Equipment:

1. Receptacles: Match plug configurations.

2. Cord and Plug Sets: Match equipment requirements.

E. Device Color:

1. Wiring Devices Connected to Normal Power System: Ivory unless otherwise indicated or required by NFPA 70 or device listing.

2. Wiring Devices Connected to Essential Electrical System: Red.

3. SPD Devices: Blue.

4. Isolated-Ground Receptacles: As specified above, with orange triangle on face.

F. Source Limitations: Obtain each type of wiring device and associated wall plate from single source from single manufacturer.

2.02 STANDARD-GRADE RECEPTACLES, 125V, 20A

A. Duplex Receptacles, 125 V, 20 A:

1. Description: Two pole, three wire, and self-grounding.

2. Configuration: NEMA WD 6, Configuration 5-20R.

3. Standards: Comply with UL 498 and FS W-C-596.

B. Isolated-Ground Duplex Receptacles, 125V, 20 A.

1. Description: Straight blade; equipment grounding contacts shall be connected only to green grounding screw terminal of the device and with inherent electrical isolation from mounting strap. Isolation shall be integral to receptacle construction and not dependent on removable parts. Two pole, three wire, and self-grounding.

2. Configuration: NEMA WD 6, Configuration 5-20R.

3. Standards: Comply with UL 498 and FS W-C-596.

C. Tamper-Resistant Duplex Receptacles, 125 V, 20 A:

1. Description: Two pole, three wire, and self-grounding. Integral shutters that operate only when a plug is inserted in the receptacle.

2. Configuration: NEMA WD 6, Configuration 5-20R.

3. Standards: Comply with UL 498 and FS W-C-596.

4. Marking: Listed and labeled as complying with NFPA 70, "Tamper-Resistant Receptacles" Article.

D. Weather-Resistant Duplex Receptacle, 125 V, 20 A:

1. Description: Two pole, three wire, and self-grounding. Integral shutters that operate only when a plug is inserted in the receptacle. Square face.

2. Configuration: NEMA WD 6, Configuration 5-20R.

3. Standards: Comply with UL 498.

4. Marking: Listed and labeled as complying with NFPA 70, "Receptacles in Damp or Wet Locations" Article.

E. Tamper- and Weather-Resistant Duplex Receptacles, 125 V, 20 A:

1. Description: Two pole, three wire, and self-grounding. Integral shutters that operate only when a plug is inserted in the receptacle. Square face.

2. Configuration: NEMA WD 6, Configuration 5-20R.

3. Standards: Comply with UL 498.

4. Marking: Listed and labeled as complying with NFPA 70, "Tamper-Resistant Receptacles" and "Receptacles in Damp or Wet Locations" articles.

2.03 USB RECEPTACLES

A. USB Charging Receptacles:

1. Description: Single-piece, rivetless, nickel-plated, all-brass grounding system. Nickel-plated, brass mounting strap.

2. USB Receptacles: Dual, USB Type A, 5 V dc, and 2.1 A per receptacle (minimum).

3. Standards: Comply with UL 1310 and USB 3.0 devices.

B. Tamper-Resistant Duplex and USB Charging Receptacles:

1. Description: Single-piece, rivetless, nickel-plated, all-brass grounding system. Nickel-plated, brass mounting strap. Integral shutters that operate only when a plug is inserted in the line voltage receptacle.

2. Line Voltage Receptacles: Two pole, three wire, and self-grounding; NEMA WD 6, Configuration 5-20R.

3. USB Receptacles: Dual USB Type A, 5 V dc, and 2.1 A per receptacle (minimum).

4. Standards: Comply with UL 498, UL 1310, USB 3.0 devices, and FS W-C-596.

5. Marking: Listed and labeled as complying with NFPA 70, "Tamper-Resistant Receptacles" Article.

2.04 GFCI RECEPTACLES, 125 V, 20 A

A. Duplex GFCI Receptacles, 125 V, 20 A :

1. Description: Integral GFCI with "Test" and "Reset" buttons and LED indicator light. Two pole, three wire, and self-grounding.

2. Configuration: NEMA WD 6, Configuration 5-20R.

3. Type: Non-feed through.

4. Standards: Comply with UL 498, UL 943 Class A, and FS W-C-596.

B. Tamper-Resistant Duplex GFCI Receptacles, 125 V, 20 A .

1. Description: Integral GFCI with "Test" and "Reset" buttons and LED indicator light. Two pole, three wire, and self-grounding. Integral shutters that operate only when a plug is inserted in the receptacle.

2. Configuration: NEMA WD 6, Configuration 5-20R.

3. Type: Non-feed through.

4. Standards: Comply with UL 498, UL 943 Class A, and FS W-C-596.

5. Marking: Listed and labeled as complying with NFPA 70, "Tamper-Resistant Receptacles" Article.

C. Tamper- and Weather-Resistant, GFCI Duplex Receptacles, 125 V, 20 A

1. Description: Integral GFCI with "Test" and "Reset" buttons and LED indicator light. Two pole, three wire, and self-grounding. Integral shutters that operate only when a plug is inserted in the receptacle. Square face.

2. Configuration: NEMA WD 6, Configuration 5-15R.

3. Type: Non-feed through.

4. Standards: Comply with UL 498 and UL 943 Class A.

5. Marking: Listed and labeled as complying with NFPA 70, "Tamper-Resistant Receptacles" and "Receptacles in Damp or Wet Locations" articles.

2.05 SPD RECEPTACLES, 125 V, 20 A

A. Duplex SPD Receptacles, 125 V, 20 A:

1. Description: Two pole, three wire, and self-grounding. Integral SPD in line to ground, line to neutral, and neutral to ground. LED indicator light.

2. SPD Components: Multiple metal-oxide varistors; with a nominal clamp-level rating of 400 V and minimum single transient pulse energy dissipation of 240 J, according to IEEE C62.41.2 and IEEE C62.45.

3. Active SPD Indication: Visual and audible, with light visible in face of device to indicate device is "active" or "no longer in service."

4. Configuration: NEMA WD 6, Configuration 5-20R.

5. Standards: Comply with NEMA WD 1, UL 498, UL 1449, and FS W-C-596.

B. Isolated-Ground Duplex SPD Receptacles, 125 V, 20 A:

1. Description: Two pole, three wire, and self-grounding. Integral SPD in line to ground, line to neutral, and neutral to ground. LED indicator light.

2. SPD Components: Multiple metal-oxide varistors; with a nominal clamp-level rating of 400 V and minimum single transient pulse energy dissipation of 240 J, according to IEEE C62.41.2 and IEEE C62.45.

3. Active SPD Indication: Visual and audible, with light visible in face of device to indicate device is "active" or "no longer in service."

4. Grounding: Equipment grounding contacts shall be connected only to green grounding screw terminal of the device and with inherent electrical isolation from mounting strap. Isolation shall be integral to receptacle construction and not dependent on removable parts.

5. Configuration: NEMA WD 6, Configuration 5-20R.

6. Standards: Comply with UL 498, UL 1449, and FS W-C-596.

2.06 TWIST-LOCKING RECEPTACLES

A. Twist-Lock, Single Receptacles, 120 V, 20 A:

1. Configuration: NEMA WD 6, Configuration L5-20R.

2. Standards: Comply with UL 498.

B. Twist-Lock, Single Receptacles, 250 V, 20 A:

1. Configuration: NEMA WD 6, Configuration L6-20R.

2. Standards: Comply with UL 498.

C. Twist-Lock, Single Receptacles, 277 V, 20 A:

1. Configuration: NEMA WD 6, Configuration L7-20R.

2. Standards: Comply with UL 498.

D. Twist-Lock, Isolated-Ground, Single Receptacles, 125 V, 20 A:

1. Grounding: Equipment grounding contacts shall be connected only to green grounding screw terminal of the device and with inherent electrical isolation from mounting strap. Isolation shall be integral to receptacle construction and not dependent on removable parts.

2. Configuration: NEMA WD 6, Configuration L5-20R.

3. Standards: Comply with UL 498.

2.07 PENDANT CORD-CONNECTOR DEVICES

A. Description: Matching, locking-type plug and receptacle body connector, heavy-duty grade.

B. Configuration: NEMA WD 6, Configurations as noted.

C. Body: Nylon, with screw-open, cable-gripping jaws and provision for attaching external cable grip.

D. External Cable Grip: Woven wire-mesh type made of high-strength, galvanized-steel wire strand, matched to cable diameter, and with attachment provision designed for corresponding connector.

E. Standards: Comply with FS W-C-596.

2.08 CORD AND PLUG SETS

A. Match voltage and current ratings and number of conductors to requirements of equipment being connected.

B. Cord: Rubber-insulated, stranded-copper conductors, with Type SOW-A jacket; with green-insulated grounding conductor and ampacity of at least 130 percent of the equipment rating.

C. Plug: Nylon body and integral cable-clamping jaws. Match cord and receptacle type for connection.

2.09 TOGGLE SWITCHES, 120/277 V, 20 A

A. Single-Pole Switches, 120/277 V, 20 A:

1. Standards: Comply with UL 20 and FS W-S-896.

B. Two-Pole Switches, 120/277 V, 20 A:

1. Comply with UL 20 and FS W-S-896.

C. Three-Way Switches, 120/277 V, 20 A:

1. Comply with UL 20 and FS W-S-896.

D. Four-Way Switches, 120/277 V, 20 A:

1. Standards: Comply with UL 20 and FS W-S-896.

E. Pilot-Light, Single-Pole Switches: 120/277 V, 20 A:

1. Description: Illuminated when switch is [on] [off].

2. Standards: Comply with UL 20 and FS W-S-896.

F. Lighted Single-Pole Switches, 120/277 V, 20 A:

1. Description: Handle illuminated when switch is [on] [off].

2. Standards: Comply with NEMA WD 1, UL 20, and FS W-S-896.

G. Key-Operated, Single-Pole Switches, 120/277 V, 20 A:

1. Description: Factory-supplied key in lieu of switch handle.

2. Standards: Comply with UL 20 and FS W-S-896.

2.10 OCCUPANCY SENSORS

A. Wall Switch Sensor Light Switch, Dual Technology:

1. Unless otherwise specified on the drawings, provide a specified in the following.

2. Description: Switchbox-mounted, combination lighting-control sensor and conventional switch lighting-control unit using dual (ultrasonic and passive infrared) technology.

3. Standards: Comply with UL 20.

4. Rated 960 W at 120 V ac for tungsten lighting, 10 A at 120 V ac or 10 A at 277 V ac for fluorescent or LED lighting, and 1/4 hp at 120 V ac.

5. Adjustable time delay of 20 minutes.

6. Able to be locked to Automatic or Manual-On mode.

7. Automatic Light-Level Sensor: Adjustable from 2 to 200 fc.

B. Wall Sensor Light Switch, Passive Infrared:

1. Unless otherwise specified on the drawings, provide a specified in the following.

2. Description: Switchbox-mounted, combination, lighting-control sensor and conventional switch lighting-control unit using passive infrared technology.

3. Standards: Comply with UL 20.

4. Connections: Hard wired.

5. Rated 960 W at 120 V ac for tungsten lighting, 10 A at 120 V ac or 10 A at 277 V ac for fluorescent or LED lighting, and 1/4 hp at 120 V ac.

6. Integral relay for connection to BAS.

7. Adjustable time delay of 20 minutes.

8. Able to be locked to Automatic or Manual-On mode.

9. Automatic Light-Level Sensor: Adjustable from 2 to 200 fc.

C. Wall Sensor Light Switch, Ultrasonic:

1. Unless otherwise specified on the drawings, provide a specified in the following.

2. Description: Switchbox-mounted, combination, lighting-control sensor and conventional switch lighting-control unit using ultrasonic technology.

3. Standards: Comply with UL 20.

4. Rated 960 W at 120 V ac for tungsten lighting, 10 A at 120 V ac or 10 A at 277 V ac for fluorescent or LED lighting, and 1/4 hp at 120 V ac.

5. Integral relay for connection to BAS.

6. Adjustable time delay of 20 minutes.

7. Able to be locked to Automatic or Manual-On mode.

8. Automatic Light-Level Sensor: Adjustable from 2 to 200 fc.

2.11 TIMER LIGHT SWITCH

1. Unless otherwise specified on the drawings, provide a specified in the following.

B. Digital Timer Light Switch:

1. Description: Switchbox-mounted, combination digital timer and conventional switch lighting-control unit, with backlit digital display, with selectable time interval in 10-minute increments.

2. Standards: Comply with UL 20.

3. Rated 960 W at 120 V ac for tungsten lighting, 10 A at 120 V ac or 10 A at 277 V ac for fluorescent or LED lighting, and 1/4 hp at 120 V ac.

4. Integral relay for connection to BAS.

2.12 DIMMERS

A. Wall-Box Dimmers:

1. Description: Modular, full-wave, solid-state dimmer switch with integral, quiet on-off switches, with audible frequency and EMI/RFI suppression filters.

2. Control: Continuously adjustable slider; with single-pole or three-way switching.

3. Standards: Comply with UL 1472.

4. LED Lamp Dimmer Switches: Modular; compatible with LED lamps; trim potentiometer to adjust low-end dimming; capable of consistent dimming with low end not greater than 20 percent of full brightness.

2.13 WALL PLATES

A. Single Source: Obtain wall plates from same manufacturer of wiring devices.

B. Single and combination types shall match corresponding wiring devices.

1. Plate-Securing Screws: Metal with head color to match plate finish.

2. Material for Finished Spaces: 0.035-inch-thick, satin-finished, Type 302 stainless steel.

3. Material for Unfinished Spaces: Galvanized steel.

4. Material for Damp Locations: Cast aluminum with spring-loaded lift cover, and listed and labeled for use in wet and damp locations.

C. Wet-Location, Weatherproof Cover Plates: NEMA 250, complying with Type 3R, weather-resistant[, die-cast aluminum with lockable cover; in-use type.

2.14 PREFABRICATED MULTIOUTLET ASSEMBLIES

A. Description: Two-piece surface metal raceway, with factory-wired multioutlet harness.

B. Components shall be products from single manufacturer designed for use as a complete, matching assembly of raceways and receptacles.

C. Raceway Material: PVC.

D. Multioutlet Harness:

1. Receptacles: 15A, 125-V, NEMA WD 6 Configuration 5-15R receptacles complying with NEMA WD 1, UL 498, and FS W-C-596.

2. Receptacle Spacing: 12 inches.

3. Wiring: No. 12 AWG solid, Type THHN copper, two circuit, connecting alternating receptacles.

PART 3 - EXECUTION

3.01 INSTALLATION

A. Comply with NECA 1, including mounting heights listed in that standard, unless otherwise indicated.

B. Coordination with Other Trades:

1. Protect installed devices and their boxes. Do not place wall finish materials over device boxes, and do not cut holes for boxes with routers that are guided by riding against outside of boxes.

2. Keep outlet boxes free of plaster, drywall joint compound, mortar, cement, concrete, dust, paint, and other material that may contaminate the raceway system, conductors, and cables.

3. Install device boxes in brick or block walls so that the cover plate does not cross a joint unless the joint is troweled flush with the face of the wall.

4. Install wiring devices after all wall preparation, including painting, is complete.

C. Conductors:

1. Do not strip insulation from conductors until right before they are spliced or terminated on devices.

2. Strip insulation evenly around the conductor using tools designed for the purpose. Avoid scoring or nicking of solid wire or cutting strands from stranded wire.

3. The length of free conductors at outlets for devices shall comply with NFPA 70, Article 300, without pigtails.

4. Existing Conductors:
   a. Cut back and pigtail, or replace all damaged conductors.
   b. Straighten conductors that remain and remove corrosion and foreign matter.
   c. Pigtailing existing conductors is permitted, provided the outlet box is large enough.

D. Device Installation:

1. Replace devices that have been in temporary use during construction and that were installed before building finishing operations were complete.

2. Keep each wiring device in its package or otherwise protected until it is time to connect conductors.

3. Do not remove surface protection, such as plastic film and smudge covers, until the last possible moment.

4. Connect devices to branch circuits using pigtails that are not less than 6 inches in length.

5. When there is a choice, use side wiring with binding-head screw terminals. Wrap solid conductor tightly clockwise, two-thirds to three-fourths of the way around terminal screw.

6. Use a torque screwdriver when a torque is recommended or required by manufacturer.

7. When conductors larger than No. 12 AWG are installed on 15- or 20-A circuits, splice No. 12 AWG pigtails for device connections.

8. Tighten unused terminal screws on the device.

9. When mounting into metal boxes, remove the fiber or plastic washers used to hold device-mounting screws in yokes, allowing metal-to-metal contact.

E. Receptacle Orientation:

1. Install ground pin of vertically mounted receptacles up, and on horizontally mounted receptacles to the right.

2. Install hospital-grade receptacles in patient-care areas with the ground pin or neutral blade at the top.

F. Device Plates: Do not use oversized or extra-deep plates. Repair wall finishes and remount outlet boxes when standard device plates do not fit flush or do not cover rough wall opening.

G. Dimmers:

1. Install dimmers within terms of their listing.

2. Verify that dimmers used for fan-speed control are listed for that application.

3. Install unshared neutral conductors on line and load side of dimmers according to manufacturers' device, listing conditions in the written instructions.

H. Arrangement of Devices: Unless otherwise indicated, mount flush, with long dimension vertical and with grounding terminal of receptacles on top. Group adjacent switches under single, multigang wall plates.

I. Adjust locations of floor service outlets and service poles to suit arrangement of partitions and furnishings.

3.02 GFCI RECEPTACLES

A. Install non-feed-through GFCI receptacles where protection of downstream receptacles is not required.

3.03 IDENTIFICATION

A. Comply with Section 260553 "Identification for Electrical Systems."

B. Essential Electrical System: Mark receptacles supplied from the essential electrical system to allow easy identification using a self-adhesive label.

3.04 FIELD QUALITY CONTROL

A. Test Instruments: Use instruments that comply with UL 1436.

B. Test Instrument for Receptacles: Digital wiring analyzer with digital readout or illuminated digital-display indicators of measurement.

C. Perform the following tests and inspections:

1. Test Instruments: Use instruments that comply with UL 1436.

2. Test Instrument for Receptacles: Digital wiring analyzer with digital readout or illuminated digital-display indicators of measurement.

D. Tests for Receptacles:

1. Line Voltage: Acceptable range is 105 to 132 V.

2. Percent Voltage Drop under 15-A Load: A value of 6 percent or higher is unacceptable.

3. Ground Impedance: Values of up to 2 ohms are acceptable.

4. GFCI Trip: Test for tripping values specified in UL 1436 and UL 943.

5. Using the test plug, verify that the device and its outlet box are securely mounted.

6. Tests shall be diagnostic, indicating damaged conductors, high resistance at the circuit breaker, poor connections, inadequate fault-current path, defective devices, or similar problems. Correct circuit conditions, remove malfunctioning units and replace with new ones, and retest as specified above.

E. Wiring device will be considered defective if it does not pass tests and inspections.

F. Prepare test and inspection reports.

END OF SECTION

26 27 26

THIS PAGE IS BLANK

26 28 16

ENCLOSED SWITCHES AND CIRCUIT BREAKERS

PART 1 - GENERAL

1.01 RELATED DOCUMENTS

A. Drawings and general provisions of the Contract, including General and Supplementary Conditions and other Division 01 Specification Sections, apply to this Section.

1.02 SUMMARY

A. Section Includes:

1. Fusible switches.
2. Nonfusible switches.
3. Receptacle switches.
4. Shunt trip switches.
5. Molded-case circuit breakers (MCCBs).
6. Enclosures.

1.03 DEFINITIONS

A. NC: Normally closed.

B. NO: Normally open.

C. SPDT: Single pole, double throw.

1.04 ACTION SUBMITTALS

A. Product Data: For each type of enclosed switch, circuit breaker, accessory, and component indicated. Include nameplate ratings, dimensioned elevations, sections, weights, and manufacturers' technical data on features, performance, electrical characteristics, ratings, accessories, and finishes.

1. Enclosure types and details for types other than NEMA 250, Type 1.
2. Current and voltage ratings.
3. Short-circuit current ratings (interrupting and withstand, as appropriate).
4. Detail features, characteristics, ratings, and factory settings of individual overcurrent protective devices, accessories, and auxiliary components.

5. Include time-current coordination curves (average melt) for each type and rating of overcurrent protective device; include selectable ranges for each type of overcurrent protective device. Provide in PDF electronic format.

B. Shop Drawings: For enclosed switches and circuit breakers.

1. Include plans, elevations, sections, details, and attachments to other work.

2. Include wiring diagrams for power, signal, and control wiring.

1.05 INFORMATIONAL SUBMITTALS

A. Qualification Data: For qualified testing agency.

B. Field quality-control reports.

1.06 CLOSEOUT SUBMITTALS

A. Operation and Maintenance Data: For enclosed switches and circuit breakers to include in emergency, operation, and maintenance manuals.

1. In addition to items specified in Section 017823 "Operation and Maintenance Data," include the following:

a. Manufacturer's written instructions for testing and adjusting enclosed switches and circuit breakers.

b. Time-current coordination curves (average melt) for each type and rating of overcurrent protective device; include selectable ranges for each type of overcurrent protective device. Provide in PDF and calculation program format electronic format.

1.07 MAINTENANCE MATERIAL SUBMITTALS

A. Furnish extra materials that match products installed and that are packaged with protective covering for storage and identified with labels describing contents.

1. Fuses: Equal to 10 percent of quantity installed for each size and type, but no fewer than three of each size and type.

1.08 FIELD CONDITIONS

A. Environmental Limitations: Rate equipment for continuous operation under the following conditions unless otherwise indicated:

1. Altitude: Not exceeding 5500 feet.

1.09 WARRANTY

A. Manufacturer's Warranty: Manufacturer and Installer agree to repair or replace components that fail in materials or workmanship within specified warranty period.

1. Warranty Period: One year(s) from date of Substantial Completion.

PART 2 - PRODUCTS

2.01 GENERAL REQUIREMENTS

A. Source Limitations: Obtain enclosed switches and circuit breakers, overcurrent protective devices, components, and accessories, within same product category, from single manufacturer.

B. Electrical Components, Devices, and Accessories: Listed and labeled as defined in NFPA 70, by an NRTL, and marked for intended location and application.

C. Comply with NFPA 70.

2.02 FUSIBLE SWITCHES

A. Type HD, Heavy Duty:

1. Single throw.

2. Three pole.

3. 240V or 600-V ac as applied.

4. 1200 A and smaller.

5. UL 98 and NEMA KS 1, horsepower rated, with clips or bolt pads to accommodate indicated fuses.

6. Lockable handle with capability to accept three padlocks, and interlocked with cover in closed position.

B. Accessories:

1. Equipment Ground Kit: Internally mounted and labeled for copper and aluminum ground conductors.

2. Neutral Kit: Internally mounted; insulated, capable of being grounded and bonded; labeled for copper and aluminum neutral conductors.

3. Lugs: Mechanical type, suitable for number, size, and conductor material.

4. Service-Rated Switches: Labeled for use as service equipment.

2.03 NONFUSIBLE SWITCHES

A. Type HD, Heavy Duty, Three Pole, Single Throw, 240V or 600-V ac, 1200 A and Smaller: UL 98 and NEMA KS 1, horsepower rated, lockable handle with capability to accept three padlocks, and interlocked with cover in closed position.

B. Accessories:

1. Equipment Ground Kit: Internally mounted and labeled for copper and aluminum ground conductors.

2. Neutral Kit: Internally mounted; insulated, capable of being grounded and bonded; labeled for copper and aluminum neutral conductors.

3. Lugs: Mechanical type, suitable for number, size, and conductor material.

4. Service-Rated Switches: Labeled for use as service equipment.

2.04 MOLDED-CASE CIRCUIT BREAKERS

A. Circuit breakers shall be constructed using glass-reinforced insulating material. Current carrying components shall be completely isolated from the handle and the accessory mounting area.

B. Circuit breakers shall have a toggle operating mechanism with common tripping of all poles, which provides quick-make, quick-break contact action. The circuit-breaker handle shall be over center, be trip free, and reside in a tripped position between on and off to provide local trip indication. Circuit-breaker escutcheon shall be clearly marked on and off in addition to providing international I/O markings. Equip circuit breaker with a push-to-trip button, located on the face of the circuit breaker to mechanically operate the circuit-breaker tripping mechanism for maintenance and testing purposes.

C. The maximum ampere rating and UL, IEC, or other certification standards with applicable voltage systems and corresponding interrupting ratings shall be clearly marked on face of circuit breaker. Circuit breakers shall be 100 percent rated.

D. MCCBs shall be equipped with a device for locking in the isolated position.

E. Lugs shall be suitable for 140 deg F (60 deg C) rated wire on 125-A circuit breakers and below 167 deg F (75 deg C) rated wire, sized according to the 167 deg F (75 deg C) temperature rating in NFPA 70.

F. Standard: Comply with UL 489 with interrupting capacity to comply with available fault currents.

G. Thermal-Magnetic Circuit Breakers: Inverse time-current thermal element for low-level overloads and instantaneous magnetic trip element for short circuits. Adjustable magnetic trip setting for circuit-breaker frame sizes 250 A and larger.

H. Adjustable, Instantaneous-Trip Circuit Breakers: Magnetic trip element with front-mounted, field-adjustable trip setting.

I. Electronic Trip Circuit Breakers: Field-replaceable rating plug, rms sensing, with the following field-adjustable settings:

1. Instantaneous trip.

2. Long- and short-time pickup levels.

3. Long- and short-time time adjustments.

4. Ground-fault pickup level, time delay, and I-squared t response.

J. Current-Limiting Circuit Breakers: Frame sizes 400 A and smaller, and let-through ratings less than NEMA FU 1, RK-5.

K. Integrally Fused Circuit Breakers: Thermal-magnetic trip element with integral limiter-style fuse listed for use with circuit breaker and trip activation on fuse opening or on opening of fuse compartment door.

L. Features and Accessories:

1. Standard frame sizes, trip ratings, and number of poles.

2. Lugs: Mechanical type, suitable for number, size, trip ratings, and conductor material.

3. Application Listing: Appropriate for application; Type SWD for switching fluorescent lighting loads; Type HID for feeding fluorescent and high-intensity discharge lighting circuits.

4. Ground-Fault Protection: Comply with UL 1053; integrally mounted, self-powered type with mechanical ground-fault indicator; relay with adjustable pickup and time-delay settings, push-to-test feature, internal memory, and shunt trip unit; and three-phase, zero-sequence current transformer/sensor.

5. Shunt Trip: Trip coil energized from separate circuit, with coil-clearing contact.

6. Undervoltage Trip: Set to operate at 35 to 75 percent of rated voltage without intentional time delay.

7. Auxiliary Contacts: Two SPDT switches with "a" and "b" contacts; "a" contacts mimic circuit-breaker contacts, "b" contacts operate in reverse of circuit-breaker contacts.

8. Alarm Switch: One NO contact that operates only when circuit breaker has tripped.

9. Zone-Selective Interlocking: Integral with [electronic] [ground-fault] trip unit; for interlocking ground-fault protection function.

2.05 ENCLOSURES

A. Enclosed Switches and Circuit Breakers: UL 489, NEMA KS 1, NEMA 250, and UL 50, to comply with environmental conditions at installed location.

B. Enclosure Finish: The enclosure shall be finished with gray baked enamel paint, electrodeposited on cleaned, phosphatized galvannealed steel (NEMA 250 Types 3R, 12).

C. Conduit Entry: NEMA 250 Types 4, 4X, and 12 enclosures shall contain no knockouts. NEMA 250 Types 7 and 9 enclosures shall be provided with threaded conduit openings in both endwalls.

D. Operating Mechanism: The circuit-breaker operating handle shall be externally operable with the operating mechanism being an integral part of the box, not the cover. The cover interlock mechanism shall have an externally operated override. The override shall not permanently disable the interlock mechanism, which shall return to the locked position once the override is released. The tool used to override the cover interlock mechanism shall not be required to enter the enclosure in order to override the interlock.

E. Enclosures designated as NEMA 250 Type 4, 4X stainless steel, 12, or 12K shall have a dual cover interlock mechanism to prevent unintentional opening of the enclosure cover when the circuit breaker is ON and to prevent turning the circuit breaker ON when the enclosure cover is open.

F. NEMA 250 Type 7/9 enclosures shall be furnished with a breather and drain kit to allow their use in outdoor and wet location applications.

PART 3 - EXECUTION

3.01 EXAMINATION

A. Examine elements and surfaces to receive enclosed switches and circuit breakers for compliance with installation tolerances and other conditions affecting performance of the Work.

B. Proceed with installation only after unsatisfactory conditions have been corrected.

1. Commencement of work shall indicate Installer's acceptance of the areas and conditions as satisfactory.

3.02 PREPARATION

A. Interruption of Existing Electric Service: Do not interrupt electric service to facilities occupied by Owner or others unless permitted under the following conditions and then only after arranging to provide temporary electric service according to requirements indicated:

1. Notify Engineer, Construction Manager, and Owner no fewer than seven days in advance of proposed interruption of electric service.

2. Indicate method of providing temporary electric service.

3. Do not proceed with interruption of electric service without written permission.

4. Comply with NFPA 70E.

3.03 ENCLOSURE ENVIRONMENTAL RATING APPLICATIONS

A. Enclosed Switches and Circuit Breakers: Provide enclosures at installed locations with the following environmental ratings.

1. Indoor, Dry and Clean Locations: NEMA 250, Type 1.

2. Outdoor Locations: NEMA 250, Type 3R or type 4X.

3. Kitchen Areas: NEMA 250, Type 4X stainless steel.

4. Other Wet or Damp, Indoor Locations: NEMA 250, Type 4.

5. Indoor Locations Subject to Dust, Falling Dirt, and Dripping Noncorrosive Liquids: NEMA 250, Type 12.

3.04 INSTALLATION

A. Coordinate layout and installation of switches, circuit breakers, and components with equipment served and adjacent surfaces. Maintain required workspace clearances and required clearances for equipment access doors and panels.

B. Install individual wall-mounted switches and circuit breakers with tops at uniform height unless otherwise indicated.

C. Comply with mounting and anchoring requirements specified in Section 260548.16 "Seismic Controls for Electrical Systems."

D. Temporary Lifting Provisions: Remove temporary lifting of eyes, channels, and brackets and temporary blocking of moving parts from enclosures and components.

E. Install fuses in fusible devices.

F. Comply with NFPA 70 and NECA 1.

3.05 IDENTIFICATION

A. Comply with requirements in Section 260553 "Identification for Electrical Systems."

1. Identify field-installed conductors, interconnecting wiring, and components; provide warning signs.

2. Label each enclosure with engraved metal or laminated-plastic nameplate.

3.06 FIELD QUALITY CONTROL

A. Manufacturer's Field Service: Engage a factory-authorized service representative to test and inspect components, assemblies, and equipment installations, including connections.

B. Perform tests and inspections with the assistance of a factory-authorized service representative.

C. Tests and Inspections for Switches:

1. Visual and Mechanical Inspection:
   a. Inspect physical and mechanical condition.
   b. Inspect anchorage, alignment, grounding, and clearances.
   c. Verify that the unit is clean.

d. Verify blade alignment, blade penetration, travel stops, and mechanical operation.

e. Verify that fuse sizes and types match the Specifications and Drawings.

f. Verify that each fuse has adequate mechanical support and contact integrity.

g. Inspect bolted electrical connections for high resistance using one of the two following methods:

1. Verify tightness of accessible bolted electrical connections by calibrated torque-wrench method in accordance with manufacturer's published data or NETA ATS Table 100.12.

a. Bolt-torque levels shall be in accordance with manufacturer's published data. In the absence of manufacturer's published data, use NETA ATS Table 100.12.

h. Verify that operation and sequencing of interlocking systems is as described in the Specifications and shown on the Drawings.

i. Verify correct phase barrier installation.

j. Verify lubrication of moving current-carrying parts and moving and sliding surfaces.

2. Electrical Tests:

a. Perform ground fault test according to NETA ATS 7.14 "Ground Fault Protection Systems, Low-Voltage."

D. Tests and Inspections for Molded Case Circuit Breakers:

1. Visual and Mechanical Inspection:

a. Verify that equipment nameplate data are as described in the Specifications and shown on the Drawings.

b. Inspect physical and mechanical condition.

c. Inspect anchorage, alignment, grounding, and clearances.

d. Verify that the unit is clean.

e. Operate the circuit breaker to ensure smooth operation.

f. Inspect bolted electrical connections for high resistance using one of the two following methods:

1. Verify tightness of accessible bolted electrical connections by calibrated torque-wrench method in accordance with manufacturer's published data or NETA ATS Table 100.12.

a. Bolt-torque levels shall be in accordance with manufacturer's published data. In the absence of manufacturer's published data, use NETA ATS Table 100.12.

g. Inspect operating mechanism, contacts, and chutes in unsealed units.

h. Perform adjustments for final protective device settings in accordance with the coordination study.

2. Correct malfunctioning units on-site, where possible, and retest to demonstrate compliance; otherwise, replace with new units and retest.

3. Perform the following infrared scan tests and inspections and prepare reports:
   a. Initial Infrared Scanning: After Substantial Completion, but not more than 60 days after Final Acceptance, perform an infrared scan of each enclosed switch and circuit breaker. Remove front panels so joints and connections are accessible to portable scanner.
   b. Follow-up Infrared Scanning: Perform an additional follow-up infrared scan of each enclosed switch and circuit breaker 11 months after date of Substantial Completion.
   c. Instruments and Equipment: Use an infrared scanning device designed to measure temperature or to detect significant deviations from normal values. Provide calibration record for device.

4. Test and adjust controls, remote monitoring, and safeties. Replace damaged and malfunctioning controls and equipment.

E. Enclosed switches and circuit breakers will be considered defective if they do not pass tests and inspections.

F. Prepare test and inspection reports.

1. Test procedures used.

2. Include identification of each enclosed switch and circuit breaker tested and describe test results.

3. List deficiencies detected, remedial action taken, and observations after remedial action.

3.07 ADJUSTING

A. Adjust moving parts and operable components to function smoothly, and lubricate as recommended by manufacturer.

B. Set field-adjustable circuit-breaker trip ranges as specified in Section 260573 "Electrical System Studies."

END OF SECTION

26 28 16

THIS PAGE IS BLANK

26 51 19

LED INTERIOR LIGHTING

PART 1 - GENERAL

1.01 RELATED DOCUMENTS

A. Drawings and general provisions of the Contract, including General and Supplementary Conditions and Division 01 Specification Sections, apply to this Section.

1.02 DEFINITIONS

A. CCT: Correlated color temperature.

B. CRI: Color Rendering Index.

C. Emergency Lighting Unit: A fixture with integral emergency battery-powered supply and the means for controlling and charging the battery. It is also known as an emergency light set.

D. Fixture: A complete lighting unit, exit sign, or emergency lighting unit. Fixtures include all mounting devices, lamps, and parts required to distribute light, position and protect lamps, and connect lamps to power supply. Internal battery-powered exit signs and emergency lighting units also include a battery and the means for controlling and recharging the battery. Emergency lighting units include ones with and without integral lamp heads.

E. Fixture: See "Luminaire."

F. IP: International Protection or Ingress Protection Rating.

G. LED: Light-emitting diode.

H. Lumen: Measured output of lamp and luminaire, or both.

I. Luminaire: Complete lighting unit, including lamp, reflector, and housing.

J. Average Life: The time after which 50 percent fails and 50 percent survives under normal conditions.

1.03 ACTION SUBMITTALS

A. Product Data: For each type of product.
   1. Arrange in order of luminaire designation.
   2. Include data on features, accessories, and finishes.
   3. Include physical description and dimensions of luminaires.
   4. Include emergency lighting units, including batteries and chargers.
   5. Include life, output (lumens, CCT, and CRI), and energy-efficiency data.
   6. Photometric data and adjustment factors based on laboratory tests, complying with IES "Lighting Measurements Testing and Calculation Guides" for each

luminaire type. The adjustment factors shall be for lamps and accessories identical to those indicated for the luminaire as applied in this Project.

a. Manufacturers' Certified Data: Photometric data certified by manufacturer's laboratory with a current accreditation under the National Voluntary Laboratory Accreditation Program for Energy Efficient Lighting Products.

B. Shop Drawings: For nonstandard or custom luminaires.
1. Include plans, elevations, sections, and mounting and attachment details.
2. Include details of luminaire assemblies. Indicate dimensions, weights, loads, required clearances, method of field assembly, components, and location and size of each field connection.
3. Include diagrams for power, signal, and control wiring.

C. Product Schedule: For luminaires and lamps, use same designations indicated on Drawings.

D. Provide project specific point-to-point photometric room lighting calculations for all occupied rooms. This includes but is not limited to: typical of each type of break-out room; offices, toilet rooms; corridors\halls\concourses; stairs; outdoor areas illuminated with exterior wall\soffit lights and outdoor pole lights.

1.04 INFORMATIONAL SUBMITTALS

A. Product Certificates: For each type of luminaire.

B. Sample warranty.

1.05 CLOSEOUT SUBMITTALS

A. Operation and Maintenance Data: For luminaires and lighting systems to include in operation and maintenance manuals.
1. Provide a list of all lamp types\modules used on Project; use ANSI and manufacturers' codes.

1.06 MAINTENANCE MATERIAL SUBMITTALS

A. Furnish extra materials that match products installed and that are packaged with protective covering for storage and identified with labels describing contents.
1. Diffusers and Lenses: three for every 100 of each type and rating installed. Furnish at least one of each type.

1.07 QUALITY ASSURANCE

A. Luminaire Photometric Data Testing Laboratory Qualifications: Luminaire manufacturer's laboratory that is accredited under the NVLAP for Energy Efficient Lighting Products.

B. Provide luminaires from a single manufacturer for each luminaire type.

C. Each luminaire type shall be binned within a three-step MacAdam Ellipse to ensure color consistency among luminaires.

1.08 DELIVERY, STORAGE, AND HANDLING

A. Protect finishes of exposed surfaces by applying a strippable, temporary protective covering before shipping.

1.09 WARRANTY

A. Warranty: Manufacturer and Installer agree to repair or replace components of luminaires that fail in materials or workmanship within specified warranty period.

B. Warranty Period: Five year(s) from date of Substantial Completion.

PART 2 - PRODUCTS

2.01 INTERIOR LIGHTING FIXTURE SCHEDULE

A. The luminaire schedule located in the construction drawings describes each type of luminaire for the project. Manufacturer's catalog numbers are given for convenience. Where discrepancies occur between catalog numbers and the descriptive information, the descriptive information shall take precedence. Some required features, options, accessory equipment or special order requirements may not be included in the catalog number.

2.02 MANUFACTURERS

A. Products: Subject to compliance with requirements, provide one of the products specified in each Luminaire Schedule on drawings.

2.03 PERFORMANCE REQUIREMENTS

A. Altitude: Sea level to 5500 feet.

2.04 LUMINAIRE REQUIREMENTS

A. Electrical Components, Devices, and Accessories: Listed and labeled as defined in NFPA 70, by a qualified testing agency, and marked for intended location and application.

B. Recessed luminaires shall comply with NEMA LE 4.

C. NRTL Compliance: Luminaires for hazardous locations shall be listed and labeled for indicated class and division of hazard by an NRTL.

D. Reflecting Surfaces: Minimum reflectance as follows, except as otherwise indicated:
1. White Surfaces: 85 percent.
2. Specular Surfaces: 83 percent.
3. Diffusing Specular Surfaces: 75 percent.
4. Laminated Silver Metallized Film: 90 percent

E. General characteristics as follows, unless otherwise noted:

1. Nominal Operating Voltage: as noted.
2. Lumen output as noted
3. Minimum allowable efficacy of 80 lm/W
4. CRI of minimum 80.
5. CCT of 3500 K] unless noted otherwise
6. Rated lamp life of Minimum of 50,000 hours to L70.
7. Dimmable range: Minimum range 100 percent to 10 percent of maximum light output, unless noted otherwise.
8. Internal driver
9. Lens Thickness: At least 0.125-inch
10. Doors, Frames, and Other Internal Access: Smooth operating, free of light leakage under operating conditions, and designed to permit relamping without use of tools. Components are designed to prevent doors, frames, lenses, diffusers, and other components from falling accidentally during relamping and when secured in operating position.
11. With integral mounting provisions.
12. Standards:
    a. ENERGY STAR certified.
    b. RoHS compliant.
    c. UL Listing: Listed for damp location.

F. Drivers
1. Driver shall operate from 50/60 Hz input source of 120V through 277V with sustained variations of +/- 10% (voltage) with no damage to the Driver.
2. Driver shall have a Power Factor greater than 0.90 for primary application to 50% of full load rating.
3. Driver input current shall have Total Harmonic Distortion (THD) of less than 20% to 50% of full load rating.

2.05 GENERAL REQUIREMENTS FOR EMERGENCY LIGHTING

A. Comply with NFPA 70 and NFPA 101

B. Internal Type Emergency Power Unit: Self-contained, modular, battery-inverter unit, factory mounted within luminaire body and compatible with driver.

C. Emergency Connection: Operate lamp(s) continuously at an output of 1100 lumens each upon loss of normal power. Connect unswitched circuit to battery-inverter unit and switched circuit to luminaire ballast.

D. Operation: Relay automatically turns lamp on when power-supply circuit voltage drops to 80 percent of nominal voltage or below. Lamp automatically disconnects from battery when voltage approaches deep-discharge level. When normal voltage is restored, relay disconnects lamps from battery, and battery is automatically recharged and floated on charger

E. Battery: Sealed, maintenance-free, nickel-cadmium or lead-acid type.

F. Charger: Fully automatic, solid-state, constant-current type with sealed power transfer relay.

G. Remote Test: Switch in handheld remote device aimed in direction of tested unit initiates coded infrared signal. Signal reception by factory-installed infrared receiver in tested unit triggers simulation of loss of its normal power supply, providing visual confirmation of either proper or failed emergency response.

H. Integral Self-Test: Factory-installed electronic device automatically initiates code-required test of unit emergency operation at required intervals. Test failure is annunciated by an integral audible alarm and a flashing red LED.

2.06 OUTDOOR FIXTURES:

A. Housings:
1. Extruded-aluminum housing and heat sink.

B. Housing and Heat Sink Rating:
1. NEMA 4X.
2. IP 66.
3. Wet locations.

C. Standards:
1. ENERGY STAR certified.
2. RoHS compliant.

2.07 MATERIALS

A. Metal Parts:
1. Free of burrs and sharp corners and edges.
2. Sheet metal components shall be steel unless otherwise indicated.
3. Form and support to prevent warping and sagging.

B. Steel:
1. ASTM A 36/A 36M for carbon structural steel.
2. ASTM A 568/A 568M for sheet steel.

C. Stainless Steel:
1. Manufacturer's standard grade.
2. Manufacturer's standard type, ASTM A 240/240 M.

D. Galvanized Steel: ASTM A 653/A 653M.

E. Aluminum: ASTM B 209.

2.08 METAL FINISHES

A. Variations in finishes are unacceptable in the same piece. Variations in finishes of adjoining components are acceptable if they are within the range of approved Samples and if they can be and are assembled or installed to minimize contrast.

2.09 LUMINAIRE SUPPORT

A. Comply with requirements in Section 260529 "Hangers and Supports for Electrical Systems" for channel and angle iron supports and nonmetallic channel and angle supports.

B. Single-Stem Hangers: 1/2-inch steel tubing with swivel ball fittings and ceiling canopy. Finish same as luminaire.

C. Wires: ASTM A 641/A 641 M, Class 3, soft temper, zinc-coated steel, 12 gage.

D. Rod Hangers: 3/16-inch minimum diameter, cadmium-plated, threaded steel rod.

E. Hook Hangers: Integrated assembly matched to luminaire, line voltage, and equipment with threaded attachment, cord, and locking-type plug.

PART 3 - EXECUTION

3.01 EXAMINATION

A. Examine substrates, areas, and conditions, with Installer present, for compliance with requirements for installation tolerances and other conditions affecting performance of the Work.

B. Examine roughing-in for luminaire to verify actual locations of luminaire and electrical connections before luminaire installation.

C. Proceed with installation only after unsatisfactory conditions have been corrected.

3.02 TEMPORARY LIGHTING

A. If approved by the Architect, use selected permanent luminaires for temporary lighting. When construction is sufficiently complete, clean luminaires used for temporary lighting and install new lamps.

3.03 INSTALLATION

A. Comply with NECA 1.

B. Install luminaires level, plumb, and square with ceilings and walls unless otherwise indicated.

C. Install lamps in each luminaire.

D. Ground lighting units. Tighten electrical connectors and terminals, including grounding connections, according to manufacturer's published torque-tightening values. Where manufacturer's torque values are not indicated, use those specified in UL 486A and UL 486B.

E. Supports:
   1. Sized and rated for luminaire weight.

2. Able to maintain luminaire position after cleaning and relamping.
3. Provide support for luminaire without causing deflection of ceiling or wall.
4. Luminaire-mounting devices shall be capable of supporting a horizontal force of 100 percent of luminaire weight and a vertical force of 400 percent of luminaire weight.

F. Flush-Mounted Luminaires:
1. Secured to outlet box.
2. Attached to ceiling structural members at four points equally spaced around circumference of luminaire.
3. Trim ring flush with finished surface.

G. Wall-Mounted Luminaires:
1. Attached to structural members in walls.
2. Do not attach luminaires directly to gypsum board.

H. Suspended Luminaires:
1. Ceiling Mount:
a. Two 5/32-inch diameter aircraft cable supports adjustable to height indicated on plans.
2. Pendants and Rods: Where longer than 48 inches, brace to limit swinging.
3. Stem-Mounted, Single-Unit Luminaires: Suspend with twin-stem hangers. Support with approved outlet box and accessories that hold stem and provide damping of luminaire oscillations. Support outlet box vertically to building structure using approved devices.
4. Continuous Rows of Luminaires: Use tubing or stem for wiring at one point and stainless steel aircraft cable for suspension for each unit length of luminaire chassis, including one at each end.
5. Do not use ceiling grid as support for pendant luminaires. Connect support wires or rods to building structure.

I. Ceiling-Grid-Mounted Luminaires:
1. Secure to any required outlet box.
2. Secure luminaire to the luminaire opening using approved fasteners in a minimum of four locations, spaced near corners of luminaire.
3. Use approved devices and support components to connect luminaire to ceiling grid and building structure in a minimum of two diagonal locations, spaced near corners of luminaire.

J. Comply with requirements in Section 260519 "Low-Voltage Electrical Power Conductors and Cables" for wiring connections.

3.04 IDENTIFICATION

A. Identify system components, wiring, cabling, and terminals. Comply with requirements for identification specified in Section 260553 "Identification for Electrical Systems."

3.05 FIELD QUALITY CONTROL

A. Perform the following tests and inspections:

1. Operational Test: After installing luminaires, switches, and accessories, and after electrical circuitry has been energized, test units to confirm proper operation.
2. Test for Emergency Lighting: Interrupt power supply to demonstrate proper operation. Verify transfer from normal power to battery power and retransfer to normal.

B. Luminaire will be considered defective if it does not pass operation tests and inspections.

C. Prepare and submit written record of test and inspection reports.

3.06 ADJUSTING

A. Occupancy Adjustments: When requested within 11 months of date of Substantial Completion, provide on-site assistance in adjusting the direction of aim of luminaires to suit occupied conditions. Make up to two visits to Project during other-than-normal hours for this purpose. Some of this work may be required during hours of darkness.
1. During adjustment visits, inspect all luminaires. Replace lamps or luminaires that are defective.
2. Parts and supplies shall be manufacturer's authorized replacement parts and supplies.
3. Adjust the aim of luminaires in the presence of the Architect.

END OF SECTION

26 51 19

SECTION 27 00 10

GENERAL COMMUNICATIONS REQUIREMENTS

PART 1 - GENERAL

1.1 RELATED DOCUMENTS

A. Comply with all requirements in the General Conditions, Supplementary Conditions, and Division 1 – General Requirements.

B. Section 270500, Common Work Results for Communications.

C. Section 270553, Identification for Communications Systems.

D. Section 271116, Communications Cabinets, Racks, Frames and Enclosures.

E. Section 271513, Copper Horizontal Cabling.

1.2 WORK INCLUDED

A. This Section includes general requirements specifically applicable to the communications sections of Division 27.

B. Work Specifically Excluded from Project:

1. Wide Area Network Systems.

C. Contractor responsibilities:

1. Provide all additional materials, and the necessary labor and services required to ensure all components of the system are completely installed in accordance with the intent of the Contract Documents.
2. Furnish and install all incidental items not actually shown or specified, but which are required by good practice to provide complete functional systems.
3. Coordinate work covered under this Division with other trades.
4. Coordinate all activities with the overall construction schedule.
5. Develop bill of materials and perform efficient material management for all required materials, regardless of source.

D. Intent of Drawings:

1. Communications plan Drawings show only general locations of equipment, devices, raceways, cable trays, boxes, etc.; dimensioned locations and elevations are approximate. The Contractor is responsible for the field coordination of communications work with the other trades prior to beginning work.

2. The Contractor shall be responsible for the proper placement and routing of equipment, cable, raceways, cable tray, and related components, according to the Contract Documents.
3. Refer conflicts between Contract Documents to the A/E or Owner for resolution.

1.3 REFERENCES

A. Standards:

1. Current version of BICSI TDMM
2. ANSI/TIA/EIA-526-7, Measurement of Optical Power Loss of Installed Single-Mode Fiber Cable Plant
3. ANSI/TIA/EIA-526-14A, Measurement of Optical Power Loss of Installed Multimode Fiber Cable Plant
4. ANSI/TIA/EIA-568-B.1, Commercial Building Telecommunications Cabling Standard, Part 1: General Requirements
5. ANSI/TIA/EIA-568-B.1-1, Commercial Building Telecommunications Cabling Standard Part 1: General Requirements, Addendum 1 Minimum 4-Pair UTP and 4-Pair ScTP Patch Cable Bend Radius, 2001. This addendum applies to minimum 4-pair unshielded twisted-pair (UTP) and 4-pair screened twisted-pair (ScTP) patch cable bend radius.
6. ANSI/TIA/EIA-568-B.1-2, Commercial Building Telecommunications Cabling Standard Part 1: General Requirements, Addendum 2, Grounding and Bonding Specifications for Screened Balanced Twisted-Pair Horizontal Cabling, 2003. Addendum 2 specifies additional requirements for grounding (earthing) and bonding of installed screened balanced horizontal cables and connecting hardware used within a commercial building environment.
7. ANSI/TIA/EIA-568-B.1-3, Commercial Building Telecommunications Cabling Standard Part 1: General Requirements, Addendum 3, Supportable Distances and Channel Attenuation for Optical Fiber Applications by Fiber Type, 2003. Addendum 3 applies to the supportable distances and channel attenuation for optical fiber applications by fiber type.
8. ANSI/TIA/EIA-568-B.1-4, Commercial Building Telecommunications Cabling Standard Part 1: General Requirements, Addendum 4, Additional Media for Commercial Building Cabling, 2003. Addendum 4 recognizes balanced twisted-pair category 6 cabling and 850 nm laser optimized 50/125 µm multimode optical fiber cable by revising subclause 4.4, 4.5, 5.3, and 11.2.2 of ANSI/TIA/EIA-568-B.1.
9. ANSI/TIA/EIA-568-B.2, Commercial Building Telecommunications Cabling Standard Part 2: Balanced Twisted-Pair Cabling Components, 2001. This document specifies cabling components, transmission, systems models, and the measurement procedures needed for verification of balanced twisted-pair cabling.
10. ANSI/TIA/EIA-568-B.2-1, Commercial Building Telecommunications Cabling Standard Part 2: Balanced Twisted-Pair Cabling Components, Addendum 1, Transmission Performance Specifications for 4-Pair 100 Ohm Category 6 Cabling, 2002. This addendum specifies insertion loss, near-end crosstalk (NEXT) loss, equal level far-end crosstalk (ELFEXT), return loss, propagation, delay and delay skew for 100 ohm 4-pair category 6 cabling, cables and connecting hardware.
11. ANSI/TIA/EIA-568-B.2-2, Commercial Building Telecommunications Cabling Standard Part 2: Balanced Twisted-Pair Cabling Components, Addendum 2, 2001. This document provides corrections to the ANSI/TIA/EIA-568-B.2.

12. ANSI/TIA/EIA-568-B.2-3, Commercial Building Telecommunications Cabling Standard Part 2: Balanced Twisted-Pair Cabling Components, Addendum 3, Additional Considerations for Insertion Loss and Return Loss Pass/Fail Determination, 2002. The purpose of this addendum is to add clause I.2.5 to ANSI/TIA/EIA-568-B.2.
13. ANSI/TIA/EIA-568-B.2-4, Commercial Building Telecommunications Cabling Standard Part 2: Balanced Twisted-Pair Cabling Components, Addendum 4 Solderless Connection Reliability Requirements for Copper Connecting Hardware, 2002. Addendum 4 specifies solderless connection reliability requirements for copper connecting hardware used in commercial building telecommunications.
14. ANSI/TIA/EIA-568-B.2-5, Commercial Building Telecommunications Cabling Standard Part 2: Balanced Twisted-Pair Cabling Components, Addendum 5 (work in progress). Addendum 5 to ANSI/TIA/EIA-568-B.2 will address additional component requirements necessary for powering of data terminal equipment (DTE) over the unshielded twisted-pair (UTP) cabling.
15. ANSI/TIA/EIA-568-B.2-6, Commercial Building Telecommunications Cabling Standard Part 2: Balanced Twisted-Pair Cabling Components, Addendum 6 (work in progress). Addendum 6 to ANSI/TIA/EIA-568-B.2 will include a refinement of Annex H and Table E-3, both of which will change current connecting hardware measurement procedures.
16. ANSI/TIA/EIA-568-B.3, Optical Fiber Cabling Components Standard, April 2000. This document specifies the component and transmission requirements for an optical fiber cabling system (e.g., cable, connectors).
17. ANSI/TIA/EIA-568-B.3-1, Optical Fiber Cabling Components Standard, Addendum 1, Additional Transmission Performance Specifications for 50/125 µm Optical Fiber Cables, 2002. This addendum specifies additional component and transmission requirements for a 50/125 µm optical fiber cable capable of supporting 10 Gb/s serial transmission up to 300 m (984 ft) using 850 nominal wavelength lasers.
18. ANSI/TIA/EIA-569-B, Commercial Building Standard for Telecommunications Pathways and Spaces, Draft 1.7, March 17, 2003.
19. ANSI/TIA/EIA-598-B, Optical Fiber Cable Color Coding, 2001. This document defines the recommended identification scheme or system for individual fibers, fiber units, or a group of fiber units within a cable structure. May be used to identify appropriate fibers for the purpose of connecting and terminating within a communications system or topography of long haul, feeder routs, subscriber or distribution applications for on premises and outside plant use.
20. ANSI/TIA/EIA-854, A Full Duplex Ethernet Specification for 1000 Mb/s (1000BASE-TX) Operating over Category 6 Balanced Twisted-Pair Cabling, 2001. This document specifies a 1000BASE-TX PHY layer as defined in the ISO/IEC Open Systems Interconnection (OSI) reference model.
21. TIA/EIA TSB-125, Guidelines for Maintaining Optical Fiber Polarity Through Reverse-Pair Positioning, 2001. This document is intended to provide additional information for maintaining optical fiber polarity through reverse pair positioning.
22. TIA/EIA TSB-140, Additional Guidelines for Field-Testing Length, Loss and Polarity of Optical Fiber Cabling Systems, Draft 3.2, July 15, 2003
23. International Standard ANSI/IEEE 802.3, Ethernet CSMA/CD.
24. All standards related to or referenced by the standards listed herein.

1.4 DEFINITIONS

A. Active Equipment: electronic equipment used to develop various WAN and LAN services, e.g., digital multiplexers, RS-232 controllers, Ethernet hubs, routers, switches, token ring hubs, paging, etc.

B. Backbone: collective term sometimes used to describe the campus and vertical distribution subsystem facilities and media interconnecting service entrances, communications rooms, and communications cabinets.

C. Bonding: permanent joining of metallic parts to form an electrically conductive path which will assure electrical continuity and the capacity to conduct safely any current likely to be imposed on it.

D. Cabinet: freestanding, floor-mounted modular enclosure designed to house and protects rack-mounted electronic equipment. It is the same 4 legged structure as a frame, but usually includes doors (front/rear), sidewalls, and also includes a top (with or without fans). Multiple cabinets side by side ("bayed together" may share a set of side wall one on each end). Cabinets may be used to mount Network equipment, servers, or passive cabling products.

E. Cable Tray: vertical or horizontal open supports usually made of aluminum or steel that is fastened to a building ceiling or wall. Cables are laid in and fastened to the trays. A cable tray is not a raceway.

F. Channel: The end-to-end transmission path between two points at which application specific equipment is connected; may include one or more links, cross-connect jumper and/or patch cords, and work area station cords. Does not include connection to active equipment.

G. Consolidation Point: assembly of a Patch Panel, mounting brackets, wire management, and Jacks mounted under the a raised floor

H. Cross-Connect: equipment used to terminate and tie together communications circuits.

I. Cross-Connect Jumper: a cluster of twisted-pair conductors used to establish a circuit by linking two cross-connect termination points.

J. EMC or Electromagnetic Compatibility: The capability of electronic equipments or systems to be operated in the intended operational electromagnetic environment at designed levels of efficiency.

K. Electromagnetic Disturbance: An electromagnetic phenomenon that may be superimposed on a wanted signal.

L. EMI or Electromagnetic Interference: Impairment of a wanted electromagnetic signal by an electromagnetic disturbance.

M. EMI Control: The control of undesired electromagnetic energy into sensitive electronic equipment, such as information technology equipment (ITE), and is applicable to both conducted and radiated electromagnetic energy.

N. ESD Control: The control of electrostatic charge to levels where electrostatic charge effects, such as ESD events, can be controlled to levels below equipment sensitivities. Various methods are used to accomplish. Some examples would be controlling humidity to greater than 40%, static dissipative flooring, etc…

O. Fiber Optic Distribution Unit (FDU): enclosure or housing with terminating equipment used to develop fiber optic cross-connect facilities.

P. Frame: 4 legged OPEN support structures. No side walls, tops, front or rear doors. Primarily used for server mounting, but can hold Network and passive equipment also.

Q. Grounding: a conducting connection to earth, or to some conducting body that serves in place of earth.

R. Hinged Cover Enclosure: Wall-mounted box with a hinged cover that is used to house and protect electrical devices.

S. Horizontal: pathway facilities and media connecting communications rooms to Telecommunication Outlets (TO's).

T. Jack: receptacle used in conjunction with a plug to make electrical contact between communications circuits; e.g., eight-position/eight-contact modular jacks.

U. Link: A transmission path between two points, not including terminal equipment, work area cables, and equipment cables; one continuous section of conductors or fiber, including the connecting hardware at each end.

V. Local Area Network (LAN): Data transmission facility connecting a number of communicating devices; e.g., serial data, Ethernet, token ring, etc. Typically, the LAN is limited to a single site.

W. Media: Twisted-pair, coaxial, and fiber optic cable or cables used to provide signal transmission paths.

X. Mounting Frame: Rectangular steel framework that can be equipment rack or wall mounted to support cabling blocks, patch panels, and other communications equipment.

Y. Multipair Unshielded Twisted Pair Cable: A cable having more than four pairs.

Z. N+1: An additional component (usually installed in parallel with like components), which responds to the loss of the same type of component(s) in parallel with it.

AA. Passive Equipment: Non-electronic hardware and apparatus; e.g., equipment racks, cable trays, electrical protection, cabling blocks, FDUs, etc.

BB. Patch Cords: A length of wire or fiber cable with connectors on one or both ends used to join communications circuits at a cross-connect.

CC. Patch Panel: System of terminal blocks or connectors used with patch cords that facilitate administration of cross-connect fields.

DD. Pathway: Facility for the placement of communications cable. A pathway facility can be composed of several components including conduit, wireway, cable tray, surface raceway, underfloor systems, raised floor, ceiling support wires, etc.

EE. Private Branch Exchange (PBX): Private communications switching system located on the user's premises. A PBX switches voice and data calls within a building or premises and between the premises and facilities provided by public common carrier networks.

FF. Protectors: Electrical protection devices used to limit foreign voltages on metallic communications circuits.

GG. Raceway: An enclosed channel designed expressly for holding wires or cables; may be of metal or insulating material. The term includes conduit, tubing, wireway, underfloor raceway, and surface raceway; does not include cable tray.

HH. Rack: An open, freestanding, floor-mounted or wall mounted structure, typically made of aluminum or steel, used to mount equipment; usually referred to as an equipment rack. Floor mounted racks have only 2 legs and no sides or doors. Primarily used for passive cabling products, but also used for Network equipment in category 3 rooms, such as TR's, ER's and EF/MDF.

II. Telecommunication Outlet (TO): Connecting device mounted in a work area used to terminate horizontal cable and interconnect cabling with station equipment.

JJ. Wide Area Network (WAN): Active communications transmission facilities extending beyond the premises.

KK. Cabling Block: Punch down terminating equipment used to develop twisted-pair cross-connect facilities.

1.5 DESIGN CRITERIA

A. Compliance by the Contractor with the provisions of this Specification does not relieve him/her of the responsibilities of furnishing materials and equipment of proper design, mechanically and electrically suited to meet operating guarantees at the specified service conditions.

B. The following are incorporated into the design:

1. The communications room installations are designed to be as similar as possible.
2. Electrical protection is provided for all exposed interbuilding twisted-pair cabling.
3. The location of communications rooms is intended to restrict the maximum horizontal subsystem cabling length (defined as a channel between ER/TR cross-connect termination field and a served TO, to 295 feet (90 meters).

1.6 WARRANTY

A. Owner requires the cabling installation company to fully comply with the cabling system manufacturer's requirements in order to ensure that the manufacturers extended warranty will be issued at the completion of the job. In addition to the standard warranty requirements, the Contractor shall provide the following during the warranty period:

1. Within 24 hours after notification of a defect, the Contractor shall initiate corrective action in coordination with other trades and Owner. The Contractor shall follow this initial contact with continuous effort and complete any required corrective work within 15 days after notification.

B. Manufacturer of solution chosen shall provide a warranty on parts and installation labor for a minimum of 20 years.

1.7 QUALIFICATIONS

A. Communications Pathway Installation: the Contractor shall have 3 years of documented experience installing raceway and cable tray systems for each of the types and system material components specified in the Contract Documents, e.g., underground duct banks, VE 1 cable tray, etc. In the case of newer technologies that do not have a 3-year history, the Contractor shall have documented experience for at least half of the lifetime of the new technology.

B. Communications Cabling: The Contractor shall have 3 years of documented experience performing cable placement, splicing, termination, connecting, and testing for each of the media types and system material components specified in the Contract Documents, e.g., Category 6 UTP, singlemode fiber, multimode fiber, etc. In the case of newer technologies that do not have a 3-year history, the Contractor shall have documented experience for at least half of the lifetime of the new technology.

1. Project Manager, Supervisors, and Principal Skilled Technicians: minimum of 5 years' experience in like work.
2. Category 6 Unshielded Twisted Pair and Fiber Optic Cable Technicians: documented training, licensing, and/or certification for the types of media specified, as applicable as well as certification from the manufacturer of the solution chosen by the owner.

1.8 REGULATORY REQUIREMENTS

A. Conformance to the national, state, and local codes and other legal requirements are the responsibility of the Contractor.

B. Contractor shall obtain all permits and arrange all inspections required by codes applicable to this Division and shall submit written evidence that the required permits, inspections, and code requirements have been secured. Coordinate site permits and obtain approval before contacting local governmental agencies.

C. Twisted-pair communications cables shall conform to National Electrical Code Article 800, Communication Circuits. General cables are marked CM by the manufacturer. Cables installed within buildings shall be manufacturer-marked with the appropriate certification code, which is CMP for plenum and other air handling spaces.

D. Fiber optic communications cables shall conform to National Electrical Code Article 770, Optical Fiber Cables. Cables installed within buildings shall be marked by the manufacturer with the appropriate certification code, which are OFCP and OFNP for plenum and other air handling spaces.

1.9 SUBMITTALS

A. General:

1. Provide ongoing inspection and permit certificates and certificates of final inspection and acceptance from the authority having jurisdiction.

2. Manufacturer's standardized schematic diagrams and catalog cuts shall not be acceptable unless applicable portions of same are clearly indicated and non-applicable portions clearly deleted or crossed out.
3. When the specifications include product descriptions, model numbers, part numbers, etc., which have been superseded, changed, or discontinued, the Contractor shall submit a comparable substitution for review by the A/E and Owner.
4. For all deviations in product from these specifications, the Contractor shall submit a physical sample of the proposed product for review by the A/E. Arrange for an Owner and A/E offsite visit to a sample product location when a product (e.g., maintenance holes) is too large for submittal.

B. Provide all applicable portions of the following information for sections listed in paragraph 1.2 above, in addition to the standard requirements with the Bid:

1. Documentation establishing qualifications to perform installation functions as required in 1.8 above:

   a. List of similar projects, of comparable complexity, type, and scope as detailed in the Contract Documents, and successfully completed by the bidder within the last 3 years.
   b. Provide at least three references associated with these similar projects that the A/E or Contractor might contact and/or visit. For each, provide a description of the work performed, duration, customer contact name, title, and phone number.
   c. Summary of experience installing pathways or copper and fiber optic communications systems as appropriate.
   d. Resumes and backgrounds for all key personnel that will be involved in this specific project including those responsible for field supervision, quality assurance, and safety. Resumes shall include professional histories, references, training, licenses, and any certifications held. Owner shall approve subsequent personnel changes.

2. Statement demonstrating an understanding of project scope and schedule which includes the following information:

   a. Where (city, office) the project will be staffed.
   b. Project organizational chart with team names; e.g., project manager, A/Es, principal skilled technicians, and subcontractors.

3. Provide the following information for materials, components, and equipment to be furnished by the Contractor:

   a. Descriptive literature, manufacturer's specification data sheets, and manuals.
   b. Individual price and delivery schedules.
   c. Manufacturer's product test data.
   d. Final Performance testing criteria and data for communications distribution system cabling systems.

C. Provide all applicable portions of the following information for sections listed in paragraph 1.2 above, in addition to the standard requirements within 10 days after award of Contract:

1. Project schedule in hard copy and electronic format compatible with Microsoft Project:

a. Include, at a minimum, major tasks, milestones, dependencies, staffing, and duration for each task.
b. Contractor shall merge this schedule into the overall construction schedule.

2. Provide make, model, and firmware revision levels of twisted-pair and optical fiber cabling planned test equipment planned for use on project. NOTE: Test equipment and firmware revision levels must be compliant with cabling system manufacturer requirements and be able to be opened by UNMH networks.

D. Provide all applicable portions of the following completed test documentation for sections listed above, in addition to the standard requirements, within 10 days after completion of the tests for each cable channel or link:

1. Test reports shall be submitted as follows:

a. Printed directly from tester
b. Delivered to owner 2 weeks prior to occupancy (if schedule allows)

2. Twisted-pair field test results.
3. Fiber optic field-test results.
4. Voice circuit field test results.
5. In full compliance with cabling system manufacturers requirements.

1.10 DEFINITION OF ACCEPTANCE

A. System acceptance shall be defined as that point in time when the following requirements have been fulfilled:

1. All submittals and documentation have been submitted, reviewed, and approved.
2. The complete system has successfully completed all testing requirements.
3. All Contractor-provided training for Owner staff has been completed.
4. All punch list items have been corrected and accepted.
5. Cabling system manufacturers warranty application terms have been fully completed, (e.g., all forms, drawings, test results submitted and approved by manufacturer).

1.11 PROJECT RECORD DOCUMENTS

A. Provide detailed project record documentation for sections listed above, in addition to the standard requirements, within 30 days after completion of the work.

1. Maintain separate sets of red-lined record drawings for the communications work that show the exact placement and identification of as-built system components.
2. Provide communication pathway record drawings that indicate exact placement and routing for all components, e.g., maintenance holes, handholes, conduit, wireway, cable tray, pull boxes, enclosures, telecommunications outlet boxes, etc.
3. Provide communication room record drawings that indicate exact placement for all components; e.g., conduit, wireway, cable tray, backboards, equipment cabinets, equipment racks, TO locations, etc.

4. Provide communication cabling and cabling record drawings and schedules that indicate exact placement, routing, and connection details for all components, e.g., twisted-pair and fiber optic cables, splices, cable cross-connect termination locations, enclosures, telecommunications outlets, cross-connect jumpers, patch cords, etc.
5. Provide network schematics when appropriate.

PART 2 - PRODUCTS

Not Used.

PART 3 - EXECUTION

3.1 WORK LIMITATIONS

A. Protect benchmarks, existing structures, fences, utilities, sidewalks, paving, and curbs from equipment and vehicular traffic.

3.2 WORKMANSHIP

A. Manufactured products, materials, equipment, and components shall be provided, conditioned, applied, installed, connected, and tested in accordance with the manufacturer's specifications and printed instructions.

B. The installation of all system components shall be carried out under the direction of qualified personnel. Appearance shall be considered as important as mechanical and electrical efficiency. Workmanship shall meet or exceed industry standards.

3.3 SERVICE CONTINUITY

A. Maintain continuity of communications services to all functioning portions of the process or buildings during hours of normal use.

B. Arrange temporary outages for cutover work with other trades and Owner. Keep outages to a minimum number and a minimum length of time in order to provide minimum impact.

3.4 BASELINE BENCHMARKS

A. Basic indoor and outdoor horizontal and vertical baselines, control points, and benchmarks, as appropriate, will be established for the project. Use these references to determine offsets and locations for manhole, handhole, duct bank, raceway, cable tray, pull box, equipment, and cable layout work under this Contract.

B. For locations where additional surveying is required to determine the location of the communications utility corridor, Contractor shall provide construction staking.

C. Provide requests for line and grade marking or work alignment verification in advance of the need, to allow for coordination with the civil trades. Include the times and places where this service is required.

3.5 LAYOUT AND TOLERANCES

A. Follow as closely as practicable the schematic design shown on the Drawings. Make all necessary measurements in the field to verify exact locations and ensure precise location and fit of specified items in accordance with the Drawings. Make no substantial alterations without prior approval of the A/E.

B. Perform all work to the lines, grades, and elevations indicated on the Drawings. Provide experienced, competent personnel to locate and lay out the work and provide them with suitable tools, equipment, and other materials required to complete layout and measurement work. Use lasers or other approved methods to establish line and grade.

C. Tolerances: After indoor and/or outdoor placement, align conduit, wireway, cable tray, boxes, and equipment. Following this, check for conformance to line and grade. The deviation of any pathway run or item of equipment from line and grade shall not exceed 1/2 inch (13 mm), unless the specifications or Drawings indicate otherwise.

3.6 TRENCHING

A. Contractor will clear the underslab and underground utility corridors, locate existing utilities, and set marker flags establishing reference lines and benchmarks for determining the location of maintenance holes and the route of new underground duct banks as indicated on the Drawings.

B. Trenches shall be straight and true with a uniformly sloped bottom, unless otherwise indicated on the Drawings. Keep trenches free of rocks and debris.

C. Prior to manhole and/or trench backfill, arrange for the civil trades to verify the accurate placement of duct banks, maintenance holes, and manhole covers.

3.7 TESTING AND INSPECTION OF COMMUNICATIONS EQUIPMENT

A. Provide tests specified below, when applicable, and as indicated under individual items of material, equipment, and work specified in other Division 27 sections.

1. Furnish all test equipment and instruments required for the tests.
2. Testing shall be performed by responsible, qualified employees of the Contractor in the presence of Owner or an authorized representative if requested.

B. Twisted-Pair Cable Tests: The most common tools for UTP copper cable testing are the time domain reflectometer (TDR), the NEXT tester, and Category 6 testers. NEXT testing shall be performed using a Manufacturer- or Owner-approved tester.

1. Twisted-Pair Cabling Tests: Level III accuracy Field Testers are required for use for all category 3 or higher category cabling. The appropriate, TIA, factory default settings are required to be used without modification.

3.8 FINAL TEST AND ADJUST

A. The Contractor shall be responsible for post-installation performance testing of all cabling systems specified elsewhere in Division 27 Contract Documents:

1. Testing procedures shall permit recording the length of each link, theoretical loss budget, and tested parameters for each pair and fiber, including space for sign-off by Contractor and A/E.
2. Any cable links with pairs or fiber strands that fail to meet performance test criteria shall be reterminated, reconnectorized, respliced, or replaced by the Contractor free of charge.
3. Submit final field test documentation in list form, including Contractor's signature for A/E (consultant) approval.

B. Unshielded Twisted-Pair Cable System Testing:

1. Requirements and recommendations for connections, test configurations, measurement procedures and precautions that are specified in the manuals provided with the tester shall be followed. Test settings selected from the options provided in the field testers shall be compatible with the installed cabling under test. It is important to select the proper test settings based on the installed components and configuration of the cabling system to be tested. Tester settings that need to be reviewed for proper testing include the Permanent Link or Channel, type of cable, NVP of cable, and performance of the category or class of cabling to be qualified.
2. All multipair cabling shall be tested in accordance with the Level III Field Tester, category 3 Permanent Link, factory default settings. If testing from one connecting block to another, ensure that the appropriate test adapters are applied to the connecting blocks. The appropriate factory default settings are required to be used without modification.
3. All 4-pair cabling shall be tested in accordance with the Level III Field Tester, category 6 category using the Permanent Link, factory default settings. If testing from one connecting block to another, ensure that the appropriate test adapters are applied to the connecting blocks. The appropriate factory default settings are required to be used without modification.

C. Fiber Optic Cable System:

1. Optical fiber field-testing requirements must adhere to TIA/EIA TSB 140, Additional guidelines for field-testing length, loss, and polarity of optical fiber cabling systems. The Tier 2 testing shall apply to all singlemode and multimode optical fiber cabling regardless of whether it is backbone or horizontal cabling. This bulleting is intended to clarify and not replace ANSI/TIA/EIA-526-7, Measurement of Optical Power Loss of Installed Single-Mode Fiber Cable Plant, Method A.1, one jumper reference and ANSI/TIA/EIA-526-14A, Measurement of Optical Power Loss of Installed Multimode Fiber Cable Plant, 2 jumper reference.
2. Performance Testing:

    a. Calculate maximum allowable link loss budgets for each optical fiber link based on worst-case loss limits and using 0.75 dB per mated pair.

b. Test each installed single mode and multimode link for end-to-end attenuation through FDU and/or T.O. terminations using a power meter with a stabilized light source.
   1) Test jumpers: Refer to ANSI/TIA/EIA-526-7, Measurement of Optical Power Loss of Installed Single-Mode Fiber Cable Plant, Method A.1, one jumper reference and ANSI/TIA/EIA-526-14A, Measurement of Optical Power Loss of Installed Multimode Fiber Cable Plant, Method B, one jumper reference.

c. Test Reports: Include field test results for each fiber stand. The test summary shall include:
   1) Cable identification as it appears on the cable schedule.
   2) Cable identification as it is labeled according to Section 27 05 53 00.
   3) Pass or fail status for each fiber strand. (If a strand fails at one wavelength and passes at the other wavelength, the strand has failed).

d. A test summary data sheet as included in the appendices.

e. The individual test data shall include:
   1) Project identification.
   2) Cable segment identification:
      a) Cable run number.
      b) Source location and FDU identification.
      c) Destination location and FDU identification.
   3) Test equipment identification:
      a) Calibration date.
      b) Light source serial number.
      c) Receiver serial number.
   4) Fiber specifications.
   5) Calculated link attenuation:
      a) Cable length in ft.
      b) Calculated link loss at 850 nm wavelength for multimode fiber.
      c) Calculated link loss at 1,300 nm wavelength for multimode fiber.
      d) Calculated link loss at 1310 nm wavelength for single mode fiber.
      e) Calculated link loss at 1550 nm wavelength for single mode fiber.
   6) Fiber Strand number.
   7) Measured link attenuation.
   8) Test technician's name and date of testing.

3.9 CONSTRUCTION REVIEW

A. The A/E (consultant) and Owner will review and observe installation work to ensure compliance by the Contractor with requirements of the Contract Documents.

B. The Contractor shall inspect and test completed communications installations to demonstrate specified performance levels including the following:

   1. Furnish all instruments and personnel required for the inspections and tests.
   2. Perform tests in the presence of the A/E (consultant) and Owner.

3. Demonstrate that the system components operate in accordance with the Contract Documents.

C. Review, observation, assistance, and actions by the A/E (consultant) or Owner shall not be construed as undertaking supervisory control of the work or of methods and means employed by the Contractor. The A/E's review and observation activities shall not relieve the Contractor from the responsibilities of these Contract Documents.

D. The fact that the A/E (consultant) or Owner does not make early discovery of faulty or omitted work shall not bar the A/E (consultant) or Owner from subsequently rejecting this work and insisting that the Contractor make the necessary corrections.

E. Regardless of when discovery and rejection are made, and regardless of when the Contractor is ordered to correct such work, the Contractor shall have no claim against the A/E (consultant) or Owner for an increase in the Contract price, or for any payment on account of increased cost, damage, or loss.

END OF SECTION

27 00 10

SECTION 27 05 00

COMMON WORK RESULTS FOR COMMUNICATIONS

PART 1 - GENERAL

1.1 RELATED DOCUMENTS

A. Comply with all requirements in the General Conditions, Supplementary Conditions, and Division 1 – General Requirements.

B. Section 270010 - General Communications Requirements.

1.2 WORK INCLUDED

A. This Section specifies the requirements necessary to furnish and install:

1. Horizontal unshielded twisted-pair cable.
2. Unshielded twisted-pair connectors.
3. Communications cable management accessories.
4. Penetration sealing materials.
5. Wiring Block Mounting Frames
6. Wiring Blocks

PART 2 - PRODUCTS

2.1 GENERAL

A. Materials and Equipment: labeled and/or listed as acceptable to the authority having jurisdiction as suitable for the use intended.

B. Figure 1 provides a list of approved vendors for particular product groupings.

C. The product identification codes used in Part 2, Products, are summarized in Table 1.

TABLE 1
PRODUCT IDENTIFICATION

Product Designation	Product Type
UTP6	Category 6 unshielded twisted-pair cable, Plenum rated

D. Provide manufacturer's standard finish color, except where specific color is indicated.

2.2 HORIZONTAL UNSHIELDED TWISTED-PAIR CABLE

A. Acceptable Manufacturers:

1. Follow US-ICE Structured Cable Plant Standards and approved products.

B. Horizontal Cables: Category 6 unshielded 100-ohm inside twisted-pair cable for use in the horizontal distribution subsystem shall meet industry standards as referenced in MCS 27 00 10 00, Section 1.3.A. These cables consist of 23-AWG thermoplastic insulated conductors formed into four individually twisted pairs and enclosed by a thermoplastic jacket.

C. Type UTP6: Category 6, CMP-listed 4-pair horizontal UTP cable; plenum rated.

2.3 TWISTED-PAIR PREMISES CONNECTORS

A. Acceptable Manufacturers: Select from one of the following.

1. AMP,
2. Belden,
3. Ortronics/Berk-Tek,
4. Comscope,
5. Siemons

B. Subminiature “D” insulation displacement 9, 15, and 25 position connectors with backshell for 22- to 26-AWG wire.

2.4 COMMUNICATIONS CABLE MANAGEMENT ACCESSORIES

A. Open and Closed Cable Distribution Rings (J-Hooks, C-Rings, and D-Rings): metallic or plastic.

B. Cable wraps:

1. Velcro wraps only! No twist ties or zip style closures!

2.5 CONDUIT AND PENETRATION SEALING MATERIALS

A. Duct Plugs:

1. Above-Ground Conduit Openings: tapered plugs with tab for pulltape; e.g., Carlon 4-inch PVC plugs with pull tab, P258NT.
2. Underground or Underslab Conduit Openings: removable screwtight compression-type duct plugs with wing nut and corrosion-resistant hardware.
3. Innerduct: If not provided by others, install innerduct plugs, caps, and sealing materials.

B. Duct Water Seal: products suitable for closing underground and entrance duct openings where innerduct or cable is installed to prevent entry of gases, liquids, or rodents into the structure.

C. Firestopping: Provide fire barrier penetration sealing materials as specified in Section 078400.

PART 3 - EXECUTION

3.1 GENERAL COMMUNICATION CABLING METHODS

A. All copper and fiber optic cabling systems, including patch cables, must comply with applicable manufacturer's warranty's requirements and be from approved manufacturers as listed. All cabling systems must be installed by manufacturer certified installation contractors. Product submittals must be approved within 10 days of contract award date. Warranty certifications and test reports must be submitted within the timeline agreed upon by an Intel representative and contractor.

B. Install cable after interior of building has been physically protected from the weather and mechanical work likely to damage conductors has been completed.

C. Before installing cabling, ensure cable pathways are thoroughly cleaned:

1. Inspect conduit, wireway, cable trays, and innerduct installed by others.
2. Swab additional enclosed raceway and innerduct systems furnished.

D. Install communications cable in accordance with manufacturer's instructions so as not to exceed the manufacturer's specified pulling tension.

E. Provide pigtails of adequate length for neat, trained, and bundled connections.

F. Provide protection for exposed cables where subject to damage.

1. Provide abrasion protection for cable or wire bundles that pass through holes or across edges of sheet metal.
2. When installing cable, insure that lengths of cable dressed along the floor are protected from traffic.

G. Cable Management Mountings, Hangers, and Attachments: Hold communications cable firmly in place using independent support.

1. Design and install straps, mountings, hangers, J-hooks, support wires, distribution rings, cable tie mountings, and other similar fittings adequate to support loads with ample safety factors and so as not to damage, bind, or deflect cable. Do not use plumbers' perforated straps as a means of support.
2. Do not fasten communications cable supports to steam, water, or other piping, ductwork, mechanical equipment, electrical equipment, electrical raceways, or wires used to support ceiling grid. Do not allow communications cables to make contact with ceiling tiles, ceiling grid support wires, or lighting fixtures.

H. Communications Cable wraps: Cable wraps and other cable management clamps shall be no more than hand tightened and shall fit snugly, but not compress, crimp, or otherwise change the physical characteristics of the cable jacket or distort the placement of twisted-pair components. Replace cable-exhibiting stresses due to over tightening of cable management devices. Use the following types of cable wraps:

1. Use Velcro wraps only

I. Cabling: Utilize continuous unspliced lengths of copper conductors or fiber optic strands between splice enclosures and/or termination points.

1. Arrange wire and cable neatly, cut to proper length, and remove surplus wire or strand.
2. Provide suitable cable slack in vaults, handholes, boxes, outlets, and at turns to ensure that there is no kinking or binding of the sheath.
3. Where possible, route cables in overhead cable trays and inside wire management systems attached to the equipment cabinets and racks. Use Velcro cable wraps to restrain cabling installed outside of wire management systems on racks or in cabinets.
4. The number of twisted-pairs or fiber strands specified for each cable shall be terminated and working.

J. Review cable routing within EF/MDF, and ER's/TR's with Owner prior to installing cables.

3.2 UNSHIELDED TWISTED-PAIR INSTALLATION

A. Place unshielded twisted-pair (UTP) cable so as to maintain the minimum cable bend radius limits specified by the manufacturer or the following, whichever is larger:

1. Horizontal Four-Pair Unshielded Twisted-Pair Cables:

a. Termination Points: eight times the cable diameter.
b. Other Locations: four times the cable diameter.

B. To avoid stretching four-pair horizontal cable conductors during installation, do not exceed a 25-pound force pulling tension (tensile loading).

C. Place copper cables transitioning between the cable trays and cabinets or racks in a neat and orderly manner. Neatly comb and tie-wrap transitioning bundles.

D. Directly terminate twisted-pair cable on wiring blocks, patch panels, and TOs in standard WECO color code order.

E. Use wiring block and/or connector manufacturer's recommended tools with the proper-sized anvils for copper punchdown, wirewrap, and crimp terminations. Stuffer caps are not permitted.

F. Unshielded twisted-pair connecting hardware and material including wiring blocks, patch panels, connectors, TOs, cross-connect jumper wire or cables, patch cords, and other components used to connect unshielded 100-ohm twisted-pair cable shall meet the industry standards referenced in MCS 27 00 10 00 Section 1.3.A.

G. Cable Jackets: To reduce untwisting of pairs, maintain the twisted pair cable jacket as close as possible to the point of termination.

1. Horizontal Cable: Strip back only as much cable jacket as is required to terminate on connecting hardware.

H. Pair Twist: Reference industry standards in Div. 270010 Section 1.03.A for the recommended practice of preserving wire pair twists as closely as possible to the point of mechanical termination. The amount of untwisting in a pair as a result of termination to connecting hardware shall be no greater than 1 inch for multipair and Category 3 cables, and no greater than 1/2 inch for Category 6. This practice maintains the maximum number of twists in the wire, to minimize signal impairment and reduce potential problems with high-speed transmission.

3.3 PENETRATIONS

A. Seal penetrations in fire-rated walls and floors as specified in Section 078400. The following requirements shall apply to the communications subcontractor:

1. Inspect firestopping installation by others between building structure and/or innerduct and conduit, sleeves, wireway, and cable tray to verify integrity of installation.
2. Sleeves and Fire Barrier Sealing Systems:

   a. Before Cable Installation: Unless provided by others, install conduit sleeves with insulating throat bushings or fire barrier sealing systems in openings where open cable passes through fire-rated walls and floors. Provide
   b. re-enterable fire stop system Hilti 653-4 system.
   c. After Cable Installation: Install intumescent fire barrier penetration sealing materials between cables and sleeves or install fire barrier sealing systems. Provide re-enterable fire stop system Hilti 653-4 system.

3. Raceways: After cable installation, install intumescent fire barrier penetration sealing materials between cables and conduit, innerduct, or wireway at all exposed penetration locations.
4. Cable Trays:

   a. During Cable Installation: Protect firestopping materials throughout the construction period in a clean and properly protected condition to maintain each assembly without indication of damage.
   b. After Cable Installation: Restore fire barrier penetration sealing materials to provide required protection.

B. Provide each conduit passing from a non-hazardous or non-corrosive area to a hazardous area and each conduit entering an enclosure within a hazardous area with a sealing fitting which meets applicable NEC Article 500 requirements. The sealing fitting shall be UL listed and shall be filled with approved sealing compound of the same manufacture.

C. Protect adjacent surfaces from damage during seal or firestop installation. Repair damage.

END OF SECTION

27 05 00

THIS PAGE IS BLANK

SECTION 27 05 28

PATHWAYS FOR COMMUNICATIONS SYSTEMS

PART 1 - GENERAL

1.1 SUMMARY

A. Section Includes:

1. Metal conduits and fittings.
2. Nonmetallic conduits and fittings.
3. Optical-fiber-cable pathways and fittings.
4. Surface pathways.
5. Boxes, enclosures, and cabinets.
6. Handholes and boxes for exterior underground cabling.

B. Related Requirements:

1. Section 260533 "Raceways and Boxes for Electrical Systems" for conduits, wireways, surface raceways, boxes, enclosures, cabinets, handholes, and faceplate adapters serving electrical systems.

1.2 ACTION SUBMITTALS

A. Product Data: For surface pathways, wireways and fittings, floor boxes, hinged-cover enclosures, and cabinets.

B. Shop Drawings: For custom enclosures and cabinets.

1.3 INFORMATIONAL SUBMITTALS

A. Seismic Qualification Certificates: For pathway racks, enclosures, cabinets, equipment racks and their mounting provisions, including those for internal components, from manufacturer.

PART 2 - PRODUCTS

2.1 METAL CONDUITS AND FITTINGS

A. General Requirements for Metal Conduits and Fittings:

1. Listed and labeled as defined in NFPA 70, by a qualified testing agency, and marked for intended location and application.
2. Comply with TIA-569-B.

B. GRC: Comply with ANSI C80.1 and UL 6.

C. ARC: Comply with ANSI C80.5 and UL 6A.

D. EMT: Comply with ANSI C80.3 and UL 797.

E. Fittings for Metal Conduit: Comply with NEMA FB 1 and UL 514B.

1. Conduit Fittings for Hazardous (Classified) Locations: Comply with UL 886 and NFPA 70.
2. Fittings for EMT:

a. Material: Steel.
b. Type: Setscrew or compression.

3. Expansion Fittings: PVC or steel to match conduit type, complying with UL-467, rated for environmental conditions where installed, and including flexible external bonding jumper.

F. Joint Compound for GRC or ARC: Approved, as defined in NFPA 70, by authorities having jurisdiction for use in conduit assemblies, and compounded for use to lubricate and protect threaded conduit joints from corrosion and to enhance their conductivity.

2.2 NONMETALLIC CONDUITS AND FITTINGS

A. General Requirements for Nonmetallic Conduits and Fittings:

1. Listed and labeled as defined in NFPA 70, by a qualified testing agency, and marked for intended location and application.
2. Comply with TIA-569-B.

B. RNC: Type EPC-40-PVC, complying with NEMA TC 2 and UL 651 unless otherwise indicated.

C. Fittings for RNC: Comply with NEMA TC 3; match to conduit or tubing type and material.

D. Solvents and Adhesives: As recommended by conduit manufacturer.

2.3 OPTICAL-FIBER-CABLE PATHWAYS AND FITTINGS

A. Description: Comply with UL 2024; flexible-type pathway, approved for general-use installation unless otherwise indicated.

1. Listed and labeled as defined in NFPA 70, by a qualified testing agency, and marked for intended location and application.
2. Comply with TIA-569-B.

2.4 SURFACE PATHWAYS

A. General Requirements for Surface Pathways:

1. Listed and labeled as defined in NFPA 70, by a qualified testing agency, and marked for intended location and application.
2. Comply with TIA-569-B.

B. Surface Metal Pathways: Galvanized steel with snap-on covers complying with UL 5. Manufacturer's standard enamel finish.

C. Surface Nonmetallic Pathways: Two- or three-piece construction, complying with UL 5A, and manufactured of rigid PVC with texture and color selected by Architect from manufacturer's standard colors. Product shall comply with UL-94 V-0 requirements for self-extinguishing characteristics.

2.5 BOXES, ENCLOSURES, AND CABINETS

A. General Requirements for Boxes, Enclosures, and Cabinets:

1. Comply with TIA-569-B.
2. Boxes, enclosures and cabinets installed in wet locations shall be listed for use in wet locations.

B. Sheet-Metal Outlet and Device Boxes: Comply with NEMA OS 1 and UL 514A.

C. Cast-Metal Outlet and Device Boxes: Comply with NEMA FB 1, ferrous alloy, Type FD, with gasketed cover.

D. Box extensions used to accommodate new building finishes shall be of same material as recessed box.

E. Metal Floor Boxes:

1. Material: sheet metal.
2. Type: Semi-adjustable.
3. Listing and Labeling: Metal floor boxes shall be listed and labeled as defined in NFPA 70, by a qualified testing agency, and marked for intended location and application.

F. Nonmetallic Floor Boxes: Nonadjustable, rectangular.

1. Listing and Labeling: Nonmetallic floor boxes shall be listed and labeled as defined in NFPA 70, by a qualified testing agency, and marked for intended location and application.

G. Small Sheet Metal Pull and Junction Boxes: NEMA OS 1.

H. Nonmetallic Outlet and Device Boxes: Comply with NEMA OS 2 and UL 514C.

PART 3 - EXECUTION

3.1 PATHWAY APPLICATION

A. Outdoors: Apply pathway products as specified below unless otherwise indicated:

1. Exposed Conduit: GRC
2. Concealed Conduit, Aboveground: EMT.
3. Underground Conduit:, Type EPC-40-PVC,
4. Boxes and Enclosures, Aboveground: NEMA 250, Type 3R.

B. Indoors: Apply pathway products as specified below unless otherwise indicated:

1. Exposed, Not Subject to Physical Damage: EMT.
2. Exposed, Not Subject to Severe Physical Damage: EMT.
3. Exposed and Subject to Severe Physical Damage: GRC.
4. Concealed in Ceilings and Interior Walls and Partitions: EMT
5. Damp or Wet Locations: GRC.
6. Pathways for Optical-Fiber or Communications Cable in Spaces Used for Environmental Air: EMT.
7. Pathways for Optical-Fiber or Communications-Cable Risers in Vertical Shafts: EMT
8. Pathways for Concealed General-Purpose Distribution of Optical-Fiber or Communications Cable: EMT.
9. Boxes and Enclosures: NEMA 250 Type 1, except use NEMA 250 Type 4 nonmetallic in institutional and commercial kitchens and damp or wet locations.

C. Minimum Pathway Size: 3/4-inch (21-mm) trade size. Minimum size for optical-fiber cables is 1 inch (27 mm).

D. Pathway Fittings: Compatible with pathways and suitable for use and location.

1. Rigid Steel Conduit: Use threaded rigid steel conduit fittings unless otherwise indicated. Comply with NEMA FB 2.10.
2. EMT: Use setscrew or compression, fittings. Comply with NEMA FB 2.10.

E. Do not install aluminum conduits, boxes, or fittings in contact with concrete or earth.

F. Install surface pathways only where indicated on Drawings.

G. Do not install nonmetallic conduit where ambient temperature exceeds 120 deg F (49 deg C).

3.2 INSTALLATION

A. Comply with NECA 1, NECA 101, and TIA-569-B for installation requirements except where requirements on Drawings or in this article are stricter. Comply with NECA 102 for aluminum pathways. Comply with NFPA 70 limitations for types of pathways allowed in specific occupancies and number of floors.

B. Keep pathways at least 6 inches (150 mm) away from parallel runs of flues and steam or hot-water pipes. Install horizontal pathway runs above water and steam piping.

C. Comply with requirements in Section 260529 "Hangers and Supports for Electrical Systems" for hangers and supports.

D. Arrange stub-ups so curved portions of bends are not visible above finished slab.

E. Install no more than the equivalent of two 90-degree bends in any pathway run. Support within 12 inches (300 mm) of changes in direction. Utilize long radius ells for all optical-fiber cables.

F. Conceal conduit and EMT within finished walls, ceilings, and floors unless otherwise indicated. Install conduits parallel or perpendicular to building lines.

G. Pathways Embedded in Slabs:

1. Run conduit larger than 1-inch (27-mm) trade size, parallel or at right angles to main reinforcement. Where at right angles to reinforcement, place conduit close to slab support. Secure pathways to reinforcement at maximum 10-foot (3-m) intervals.
2. Arrange pathways to cross building expansion joints at right angles with expansion fittings.
3. Arrange pathways to keep a minimum of 2 inches (50 mm) of concrete cover in all directions.
4. Do not embed threadless fittings in concrete unless specifically approved by Architect for each specific location.

H. Stub-ups to Above Recessed Ceilings:

1. Use a conduit bushing or insulated fitting to terminate stub-ups not terminated in hubs or in an enclosure.

I. Coat field-cut threads on PVC-coated pathway with a corrosion-preventing conductive compound prior to assembly.

J. Terminate threaded conduits into threaded hubs or with locknuts on inside and outside of boxes or cabinets. Install insulated bushings on conduits terminated with locknuts.

K. Install pathways square to the enclosure and terminate at enclosures with locknuts. Install locknuts hand tight plus 1/4 turn more.

L. Do not rely on locknuts to penetrate nonconductive coatings on enclosures. Remove coatings in the locknut area prior to assembling conduit to enclosure to assure a continuous ground path.

M. Spare Pathways: Install pull wires in empty pathways. Cap underground pathways designated as spare above grade alongside pathways in use.

N. Surface Pathways:

1. Install surface pathway for surface telecommunications outlet boxes only where indicated on Drawings.

O. Pathways for Optical-Fiber and Communications Cable: Install pathways as follows:

1. 1-Inch (27-mm) Trade Size and Larger: Install pathways in maximum lengths of 75 feet (23 m).

2. Install with a maximum of two 90-degree bends or equivalent for each length of pathway unless Drawings show stricter requirements.

P. Install pathway sealing fittings at accessible locations according to NFPA 70 and fill them with listed sealing compound.

Q. Locate seals so no fittings or boxes are between the seal and the following changes of environments. Seal the interior of all pathways at the following points:

1. Where conduits pass from warm to cold locations, such as boundaries of refrigerated spaces.
2. Where an underground service pathway enters a building or structure.
3. Where otherwise required by NFPA 70.

R. Mount boxes at heights indicated on Drawings in accordance with ADA requirements. Install boxes with height measured to center of box unless otherwise indicated.

S. Horizontally separate boxes mounted on opposite sides of walls so they are not in the same vertical channel.

3.3 INSTALLATION OF UNDERGROUND CONDUIT

A. Direct-Buried Conduit:

1. Excavate trench bottom to provide firm and uniform support for conduit. Prepare trench bottom as specified in Section 312000 "Earth Moving" for pipe less than 6 inches (150 mm) in nominal diameter.
2. Install backfill as specified in Section 312000 "Earth Moving."
3. After installing conduit, backfill and compact. After placing controlled backfill to within 12 inches (300 mm) of finished grade, make final conduit connection at end of run and complete backfilling with normal compaction as specified in Section 312000 "Earth Moving."
4. Install manufactured rigid steel conduit elbows for stub-ups at poles and equipment and at building entrances through floor.

   a. Couple steel conduits to ducts with adapters designed for this purpose, and encase coupling with 3 inches (75 mm) of concrete for a minimum of 12 inches (300 mm) on each side of the coupling.
   b. For stub-ups at equipment mounted on outdoor concrete bases and where conduits penetrate building foundations, extend steel conduit horizontally a minimum of 60 inches (1500 mm) from edge of foundation or equipment base. Install insulated grounding bushings on terminations at equipment.

5. Underground Warning Tape: Comply with requirements in Section 260553 "Identification for Electrical Systems."

3.4 INSTALLATION OF UNDERGROUND HANDHOLES AND BOXES

A. Install handholes and boxes level and plumb and with orientation and depth coordinated with connecting conduits to minimize bends and deflections required for proper entrances.

B. Elevation: In paved areas, set so cover surface will be flush with finished grade. Set covers of other enclosures 1 inch (25 mm) above finished grade.

C. Install handholes with bottom below frost line, below grade.

D. Field cut openings for conduits according to enclosure manufacturer's written instructions.

3.5 SLEEVE AND SLEEVE-SEAL INSTALLATION FOR COMMUNICATIONS PENETRATIONS

A. Install sleeves and sleeve seals at penetrations of exterior floor and wall assemblies. Comply with requirements in Section 270544 "Sleeves and Sleeve Seals for Communications Pathways and Cabling."

3.6 FIRESTOPPING

A. Install firestopping at penetrations of fire-rated floor and wall assemblies. Comply with requirements in Section 078413 "Penetration Firestopping."

3.7 PROTECTION

A. Protect coatings, finishes, and cabinets from damage or deterioration.

END OF SECTION

27 05 28

THIS PAGE IS BLANK

SECTION 27 05 53

IDENTIFICATION FOR COMMUNICATIONS SYSTEMS

PART 1 - GENERAL

1.1 RELATED DOCUMENTS

A. Comply with all requirements in the General Conditions, Supplementary Conditions, and Division 1 – General Requirements.

B. Division 27, Section 270553, Identification for Communication Systems.

C. Division 27, Section 271116, Communications Cabinets, Racks, Frames, and Enclosures.

D. Division 27, Section 271119, Communications Termination Blocks and Patch Panels.

E. Division 27, Section 271513, Communications Copper Horizontal Cabling.

F. Division 27, Section 271543, Communications Faceplates and Connectors.

1.2 SCOPE OF WORK

A. Work covered by this Section shall consist of furnishing labor, equipment, supplies, materials, and testing unless otherwise specified, and in performing the following operations recognized as necessary for the labeling of the telecommunications infrastructure as described on the Drawings and/or required by these specifications.

B. It is the intent is to create a Class 3 system of administration as per ANSI/TIA/EIA 606-A Standards. As such, all elements must be labeled with unique identifiers as described in the following sections.

C. This section includes minimum requirements for the following:

1. Labeling Communications Cabling
2. Labeling Closet Hardware
3. Labeling Work Stations

PART 2 - PRODUCTS

2.1 LABELS

A. The size, color and contrast of all labels should be selected to ensure that the identifiers are easily read.

B. All labels are to be mechanically printed, no hand printed labels allowed for any component.

C. Labels should be visible during the installation of and normal maintenance of the infrastructure. Labels should be resistant to the environmental conditions at the point of installation (such as moisture, heat or ultraviolet light) and should have a design life equal to or greater than that of the labeled component.

D. Provide vinyl substrate with a white printing area and black print. If cable jacket is white, provide cable label with printing area that is any other color than white, preferably orange or yellow – so that the labels are easily distinguishable.

E. Labels shall be flexible vinyl or other substrates to apply easy and flex as cables are bent.

F. Labels shall use aggressive adhesives that stay attached even to the most difficult to adhere to jacketing.

PART 3 - EXECUTION

3.1 LABELING INSTALLATION

A. Horizontal Copper Cable Labeling:

1. All horizontal cables shall be labeled with self-laminating marking tape, Brady ID-Pro labeler, Panduit LS7 labeler, or equivalent labeling system.
2. At the TR end, the cables shall be labeled with the location of where the other end of the cable is terminated including room number, TO number, and jack position. Place label on a visible part of cable within 12” of termination point for ease of identification after termination.

    a. Example: A cable going to room 114, first TO, first jack position would be labeled as: 114-1A1. A cable in the second TO, third jack position would be 114-2A3.

3. At the TO end, the cables shall be labeled 4” from termination with the following: TR – Rack.Patch Panel.Port. This shall be visible by removing outlet cover plate.

    a. Example: TR Room 114, rack 1, patch panel 1, port 03 would be:
        i. 114 – 1.1.03

B. Telecommunications Outlet (TO) Labeling Scheme:

1. TO’s are labeled alphanumerically in a clockwise rotation around the room. Typically, the first TO located to the left of the main entrance of the room is labeled 1A, followed by 2A, 3A, etc. Where two entrances are present, designate one as the main entrance and label accordingly.

    a. The intent is to have unique identification for each TO. The starting point and nomenclature of the TO’s are irrelevant to the location inside the room.
2. Floor box TO’s are to be prefaced with “FB” to read FB1A, FB2A, etc.
3. Wireless Access Point TO’s in ceilings are to be prefaced with “W” to read W1A, W2A, etc.

4. On subsequent TO installations, the TO will be labeled alphanumerically depending on where the new TO is. If the new TO is between 1A and 2A, the new TO would be labeled as 1B. If another one is later added between 1B and 2A, it would be labeled 1C. If it is after the last TO in the room, 3A, it would be labeled 4A.
5. Seek clarification from OWNERS Telecommunications for any labeling issues that arise.

C. Faceplate Labels:

1. Faceplates will be labeled using the plastic insert to cover a printed identification tag. Each of the 2 labels in a faceplate are meant to have 2 lines for a total of 4 individual lines per faceplate.

   a. Line 1 contains the preface "D" for Data, the specific TR, rack, patch panel, and the range of ports used for termination. In case of separate voice and data closets, only the data information is conveyed here.
      i. Example: For cables going to TR Room 114, rack 1, patch panel 1, ports 3-5, line 1 would read: D.114.1.1.03/05.
   b. Line 2 also contains information regarding where cables are terminated in the closet, but is used for subsequent cable installations to that specific TO.
      i. Example: Another 3 cables were added to the same TO at a later date. For cables that go to TR Room 114, rack 3, patch panel 3, ports 22,23, and 30, line 2 would read: D.114.3.3.22/23.30.
   c. Line 3 is only used if separate voice and data closets are being used. Line 3 contains the preface "V" for Voice, the TR, and the TO number and jack position.
      i. Example: For 2 cables going to voice closet 117 in the 3rd and 4th position of TO 2A, the label would be: V.117.2A3/4.
   d. Line 4 is the unique identifier for the TO. It contains the OWNERS Building number, the room the TO is located in, and the alphanumeric designation of the TO as per section 4.01.B.
      i. Example: A TO in room building 255, room 114, designated as 2A would be: 255-114-2A.

D. Horizontal 110 Block Labeling for voice:

1. For 110 blocks, if the cables are for room terminations, label the appropriate corresponding space for the port with the room number, TO, and jack position.

   a. Example: A cable going to room 114, first TO, first jack position would be labeled as: 114-1A1. A cable in the second TO, third jack position would be 114-2A3.

2. If the 110 block is for the tie cable between the voice patch panel in the rack and the wallboard, label the space corresponding to the port with the rack, patch panel and port information as per section 4.01.E.2. For tie cables between the rack and wallboard a 110 block should always be used.

   a. Example: Rack 1, patch panel 1, port 03 would be: 1.1.03

E. Patch Panel Labeling:

1. For station cabling going to a TO, label each port on the patch panel with the room number, TO, and jack position.

a. Example: A cable in room 114, first TO, first jack position would be labeled as: 114-1A1. A cable in the second TO, third jack position would be 114-2A3.
b. Example: A cable going to a floor box TO labeled FB1A in room 114 in the second jack position would be labeled as: 114-FB1A2

2. For voice patch panels connected to a 110 block within the TR, label each port on the voice patch panel with the corresponding 110 block source information as per section 4.01.D.3.

a. Example: A 110 block in the first column, third row down, port 4 would be: 1.3.04

END OF SECTION

27 05 53

SECTION 27 11 16

COMMUNICATIONS CABINETS, RACKS, FRAMES, AND ENCLOSURES

PART 1 - GENERAL

1.1 RELATED DOCUMENTS

A. Comply with all requirements in the General Conditions, Supplementary Conditions, and Division 1 – General Requirements.

B. Division 27, Section 270553, Identification for Communication Systems.

C. Division 27, Section 271119, Communications Termination Blocks and Patch Panels.

1.2 SCOPE OF WORK

A. Work covered by this Section shall consist of furnishing labor, equipment, supplies, materials, and testing unless otherwise specified, and in performing the following operations recognized as necessary for the installation, termination, testing and labeling of all telecommunications infrastructure as described on the Drawings and/or required by these specifications.

PART 2 - PRODUCTS

2.1 ACCEPTED EQUIPMENT PROVIDERS

A. The Basis of Design provider for rack equipment is Chatsworth as mentioned however rack products and associated vertical wire management system of equivalent quality and standards will be entertained through the submittal process. If another rack provider is chosen for project completion the grounding specifications will still apply.

2.2 FLOOR MOUNTED EQUIPMENT FRAMES FOR DATA, & VOICE SYSTEMS

A. 2-Post equipment racks Basis of Design is Chatsworth Universal 2-Post Frame part number 48353-X02 (78”H x 19”W x 41U) for data equipment black unless otherwise specified or equivalent.

B. 4-Post equipment racks Basis of Design is Chatsworth QuadraRack™ 4-Post Frame part number 15216-703 for data equipment black unless otherwise specified or equivalent.

C. Racks are to be joined vertically using the Chatsworth Global Vertical cabling solution part number 12831-703 or equivalent.

D. Junction plate at top of equipment frame shall be Homaco #JP0912 or equivalent.

E. The specifications for frames and ancillary equipment are subject to change depending on build out design guidelines.

F. Provide wide baseplate and anchor to floor.

2.3 WALL MOUNTED CABINET

A. Wall-mount enclosure with lockable front door and swing-out rear access to equipment
   1. Steel sheet cabinet body, rear panel and door
   2. Tempered glass door
   3. Keyed lock
   4. Knockouts at top and bottom
   5. High airflow vent pattern and
   6. Removable top/bottom panel on rear panel
   7. 19"W, EIA-310-D compliant
   8. Threaded #12-24 equipment mounting holes
B. Dimensions (unless noted otherwise): 36" high (19U) x 19" EIA width x 24" deep
C. Basis of Design is Chatsworth CUBE-iT series
D. Include options:
   1. Low-decibel, dual-fan kit and filter
   2. Include two rack-mount shelves

2.4 VERTICAL WIRE MANAGEMENT (FOR FLOOR MOUNTED RACK)

A. Vertical wire management for Data, Voice and/or Security systems (for Chatsworth QuadraRack part 50120-X03. 4-Post Frame) Basis of Design is Chatsworth part number 30166-703.

PART 3 - EXECUTION

3.1 EQUIPMENT FRAME INSTALLATION

A. Provide equipment racks as needed to mount patch panels, equipment, etc. as Specified herein.
B. Provide a junction plate at top of equipment rack and required cable runway to Attach rack to cable runway around the perimeter of the TR.
C. Installation of 4 and 2 post equipment racks (Frames)

   1. Confirm equipment frame location with OWNER prior to installation.
   2. Confirm all location of equipment before installing in racks or on walls.
   3. Provide equipment racks as needed to mount patch panels, equipment, etc. as specified herein.
   4. Install racks with 36 inches clearance at front and rear of each row and 36 inches at the end of each row.
   5. Place the equipment frame in the TR to ensure that it is aligned with equipment frames, or such that the “front” mounting holes on the channels of the equipment frame are installed with the long axis 4 feet from the parallel wall, and space allowing, 3 feet from any adjacent wall. This is to ensure at least 36 inches of clearance completely around the equipment frame once termination and electronics are installed in the equipment frame.

6. Assemble frames according to manufacturer's instructions. Verify that equipment mounting rails are sized properly for rack-mount equipment before attaching the frame to the floor.
7. All frames must be attached to the floor in four places using appropriate floor mounting anchors. The completed equipment frame will be affixed to the floor using drop-in anchors and 5/8-inch zinc-plated hex bolts. The anchors will be sheathed with an isolation sleeve and isolation pads under each rack. The rack will be anchored with split and flat washers 5/8 inch nylon slip stop nuts.
8. When placed over a raised floor, threaded rods should pass through the raised floor tile and be secured in the structural floor below. (Use CPI Part Number 40604-003 for concrete slab floors or 40607-001 wood floors. Raised floor support kits are also available.)
9. The frame should have additional bracing as required by building codes and the recommendations of a licensed structural engineer, i.e. for seismic requirements.
10. Where indicated, ladder rack shall be attached to the top of the frame to deliver cables to the frame. Provide a junction plate at top of equipment rack and required cable runway to attach rack to cable runway around the perimeter of the TR. Install the junction plates above all equipment racks and attach to cable runway. The frame should not be drilled to attach ladder rack. Use appropriate hardware from the ladder rack manufacturer. Junction plate must be fastened to frame without using "J" hooks so that no equipment space is lost.
11. All equipment racks shall be grounded. Frames shall be grounded to the TGB using appropriate hardware provided by the contractor. The ground will meet local code requirements and will be approved by the Authority Having Jurisdiction (AHJ).
12. Grounding of equipment racks shall include scraping of paint off grounding points on rack, installer must use sheathed six gauge grounding wire with home runs from each rack grounding point to the bus bar located in the ER or TR.
13. The equipment load should be evenly distributed and uniform on the frame. Place large and heavy equipment towards the bottom of the frame. Secure all equipment to the frame with equipment mounting screws.

D. Installation of Vertical Cable Managers

1. Attach vertical cable managers to the side of the rack/frame using the manufacturer's installation instructions and included hardware.
2. When a single vertical cable manager is used in between two racks/frames, attach the vertical cable manager to both racks/frames.
3. When more than one cable manager is used on a rack/frame or group of racks/frames, use the same make, style and size of vertical cable manager on the rack/frame or in between racks/frames.
4. The color of the rack(s)/frame(s) and cable manager(s) must match.
5. Doors should be attached to the cable manager and in the closed position after cabling is complete.

E. Equipment Cabinets and Wall Mount Equipment Cabinets are to be installed according to manufacture instructions.

3.2 Wall Mount Equipment Racks\Cabinets

A. Coordinate and provide backing to support weight of rack and all equipment.
B. Install according to manufacturer instructions.

END OF SECTION

27 11 16

SECTION 27 11 19

TERMINATION BLOCKS AND PATCH PANELS

PART 1 - GENERAL

1.1 RELATED DOCUMENTS

A. Comply with all requirements in the General Conditions, Supplementary Conditions, and Division 1 – General Requirements.

B. Division 27, Section 270553, Identification for Communication Systems.

C. Division 27, Section 271116, Communications Cabinets, Racks, Racks, and Enclosures.

D. Division 27, Section 271513, Communications Copper Horizontal Cabling.

1.2 SCOPE OF WORK

A. Work covered by this Section shall consist of furnishing labor, equipment, supplies, materials, and testing unless otherwise specified, and in performing the following operations recognized as necessary for the installation, termination, and labeling of termination blocks and patch panels as described on the Drawings and/or required by these specifications.

PART 2 - PRODUCTS

2.1 GENERAL

A. The materials and products specified herein reflect the minimum acceptable standards of fabrication and manufacture. All materials and products supplied by the Contractor and specified herein are to be new, unused, of first quality and in original packaging or shipping containers or as shown on drawings and described in Item 3.01.

1. This project shall utilize Cat 6 cabling and associated solutions. Follow US-ICE ITS Guidelines and approved products

2.2 110 TERMINATION BLOCKS FOR COPPER CABLES

A. 110 termination blocks for copper cables shall only be used for vertical/riser/intrabuilding copper applications.

B. Field termination kit includes wiring block, (5) 4-pair connector blocks and (1) 5-pair connector block for each 25 pair wiring strip, and labels.

2.3 PATCH PANELS

A. Where Category 6 cabling is required:

1. 48 port. Match patch panels to appropriate approved solution
2. Voice grade patch panels to be 6 position modular, high density, 48 port, with pins 3,4,5,6 activated and install 25 pair connectorized cable assembly.

B. Wire Management

1. Equipment Rack Horizontal Wire Managers shall be black with hinged covers, 2 RU in size.

   a. See Section 271116, Cabinets, Racks Frames and enclosures

2. Equipment Rack Vertical Wire Management

   a. See Section 271116, Cabinets, Racks Frames and enclosures

3. Wallboard Wire Managers

   a. Use standard 4” D rings for cable routing between wall fields as required.

PART 3 - EXECUTION

3.1 PATCH PANEL INSTALLATION

A. Each TR shall contain patch panels as required to terminate all pairs on its respective floor or floors served.

B. Install data patch panels in 19” equipment racks as specified on the Drawings or as specified herein.

C. Wire management to be mounted at the top and bottom of station cabling equipment racks and between every patch panel.

D. Include Chatsworth vertical cable manager in between and on both sides of equipment rack.

E. Provide 25% spare patch panel capacity for growth.

END OF SECTION

27 11 19

SECTION 27 15 13

COPPER HORIZONTAL CABLING

PART 1 - GENERAL

1.1 RELATED DOCUMENTS

A. Comply with all requirements in the General Conditions, Supplementary Conditions, and Division 1 – General Requirements.

B. Division 27, Section 270553, Identification for Communication Systems.

C. Division 27, Section 271116, Communications Cabinets, Racks, Frames, and Enclosures.

D. Division 27, Section 271119, Communications Termination Blocks and Patch Panels.

E. Division 27, Section 271543, Communications Faceplates and Connectors.

1.2 SCOPE OF WORK

A. Work covered by this section shall consist of furnishing labor, equipment, supplies, materials, and testing unless otherwise specified, and in performing the following operations recognized as necessary for the installation, termination, and labeling of grounding and bonging infrastructure as described on the drawings and/or required by these specifications.

PART 2 - PRODUCTS

2.1 GENERAL

A. The materials and products specified herein reflect the minimum acceptable standards of fabrication and manufacture. All materials and products supplied by the Contractor and specified herein are to be new, unused, of first quality and in original packaging or shipping containers or as shown on drawings and described in Item 3.01.

B. Cabling for this project shall be Cat 6.

2.2 DATA

A. Buildings requiring Category 6 cabling:

1. 4-pair, category 6, unshielded twisted pairs, 23 gauge, bare copper, polyethylene insulated conductors, with overall blue jacket, CMP (Plenum) rated.

B. Acceptable Manufacturers: Select from one of the following.

1. AMP,
2. Belden,
3. Ortronics/Berk-Tek,
4. Comscope,
5. Siemons

2.3 VOICE

A. All voice cabling will follow data cabling guidelines with CAT 6. Category 3 or 5 cabling is not to be installed for any application.

PART 3 - EXECUTION

3.1 GENERAL

A. This section describes the installation locations for the products and materials, as well as methods and owner's standards associated with the telecommunications installation portions of the project. These specifications, along with the drawings and other owner-supplied specifications shall be followed during the course of the installation.

B. The contractor is required to be currently listed as a registered Certified Installer for the solution chosen and provide personnel for telecommunications installations who are certified.

C. The contractor is instructed to coordinate their efforts with the other tradesmen who may be working within the same vicinity to avoid conflict and lost time.

D. The contractor is required to supply all necessary tools, equipment, accessories, safety equipment, protective clothing, etc., as customary for the craft and necessary for the installation.

E. The contractor shall verify space requirements and locations with owner before starting cable installations and terminations.

F. The contractor shall verify the cable type and jacket rating required with the owner's representative before starting cable installation.

G. The contractor shall verify existing cable fill in pathways before installation of additional cables so as not to exceed 40% cable fill. The contractor will be responsible for installation of additional pathways where additional cables to be added will exceed the 40% cable fill ratio.

3.2 HORIZONTAL COPPER CABLING INSTALLATION - DATA AND VOICE

A. The copper horizontal cabling will be terminated at the TR on patch panels as per specifications in Division 27, Section 271119 Communications Termination Blocks and Patch Panels, and at the work area Telecommunications Outlets (TO) as per Division 27, Section 271543 Communications Faceplates and Connectors.

B. Where patch panels are mounted in equipment racks, equally distribute cables on each side, down the vertical wire management, and into the horizontal wire management so as not to exceed wire management fill capacity.

C. Cables are to be neatly dressed with Velcro tie wraps, and secured to the strain relief bars at the back of the patch panels.

D. All cables at the back of the patch panel are to be labeled as per Division 27, Section 270553 Identification for Communication Systems and owner's specified system.

E. Horizontal cabling shall be terminated such that wire pair twists are maintained as closely as possible to the point of mechanical termination. No greater than 0.5" for category 6.

F. All terminations are to use TIA 568B wiring standards.

G. Maximum strip length shall be .5" or less. Maintain cable sheath to leading edge of connector block.

H. Dust caps are to be placed over the terminated cabling at the back of the patch panel.

I. Contractor is responsible to obtain and follow installation instructions for approved solutions products for correct termination and wire management of cables on respective products.

J. Owner to provide patch cords and make all connections to network and phone system.

K. Cable service loops within TOs shall be adequate to permit installation and removal of device for inspection without damage to cable or connections.

L. Cable bends shall not be greater than that recommended by the manufacturer of the cable.

M. Care shall be taken so as not to damage cable during the installation process and that manufacturer's pull tension specification is not exceeded.

N. Horizontal cable lengths must not exceed 295 feet (90 meters). Owner's representative if this is not possible.

O. Provide a minimum 6' of service loop at the TR's to be contained in the cable tray.

P. In TR's, cables shall be snugly wrapped using Velcro reusable cable wraps, a minimum of every 3' for cable organization, and installed in a neat and workmanlike manner. Cable wraps shall be tightened so as not to deform cable jackets and thus affect cable performance.

Q. Cable fill in pathways shall not exceed 40% cable fill on initial use, or 60% on subsequent installations.

R. New TR's must be free from dust, dirt, and other foreign materials before the installation of any termination hardware or the termination of copper or fiber optic cables. The door to the telecommunication rooms must be closed during termination.

S. Manufactured waterfalls from cable tray into racks must be provided by cable installer before installation of cabling as needed.

3.3 CABLE TESTING

A. Contractor shall notify the owner's representative before the start of testing in order to accompany the contractor during testing for verification purposes.

B. 100% testing of all cables is required.

C. The horizontal cabling consisting of single 4-pair cable runs, including those designated for voice shall be tested for the relevant CAT 6 Permanent Link Test compliance.

D. Contractor shall provide a copy of the test reports in 1 hardcopy and 1 LinkWare (Fluke) in open format.

E. Owner may perform random verification testing as part of acceptance of all copper cable testing.

3.4 EQUIPMENT INSTALLATION AND CABLE TERMINATIONS

A. All equipment shall be installed in a neat and workmanlike manner, arranged for convenient operation, testing and future maintenance.

B. The contractor shall employ certified system installation technicians and have at least 2 years experience in the installation of approved cabling solution system.

C. The contractor shall supply verification of experience and/or certifications for this type of work to the Architect and owner for approval before performing any work.

3.5 AS-BUILT INFORMATION

A. Contractor shall provide as-built information to owner to accompany all test result information.

B. As-built information shall be in red-lined format on a copy of construction drawings. Indicate location of all TO's, pathways, distribution cable trays, junction boxes, and all additions and deletions pertaining to telecommunications. Include correct TO labeling next to all telecom symbols.

C. If construction drawings are not utilized, contractor shall provide all telecommunications location information on an accurate and scaled floor plan.

3.6 SYSTEM WARRANTY REQUIREMENTS

A. Contractor shall perform all labeling requirements and provide testing documentation for verification as described herein.

B. Contractor shall submit cable records to reflect all moves, adds, and changes.

C. Contractor shall provide floor plans showing locations of all telecommunication outlets and spaces.

D. Contractor shall perform these requirements for category 6 permanent link configurations and submit to the hardware manufacturer with test results as necessary to obtain the 20-year minimum system performance guarantee to owner as defined by the cable and hardware manufacturers. The 20-year minimum system warranty shall be provided to US-ICE prior to final payment for work.

END OF SECTION

27 15 13

THIS PAGE IS BLANK

SECTION 27 15 43

FACEPLATES AND CONNECTORS

PART 1 - GENERAL

1.1 RELATED DOCUMENTS

A. Comply with all requirements in the General Conditions, Supplementary Conditions, and Division 1 – General Requirements.

B. Division 27, Section 270553, Identification for Communication Systems.

C. Division 27, Section 271116, Communications Cabinets, Racks, Frames, and Enclosures.

D. Division 27, Section 271119, Communications Termination Blocks and Patch Panels.

1.2 SCOPE OF WORK

A. Work covered by this Section shall consist of furnishing labor, equipment, supplies, materials, and testing unless otherwise specified, and in performing the following operations recognized as necessary for the installation, termination, and labeling of faceplates and connectors as described on the Drawings and/or required by these specifications.

PART 2 - PRODUCTS

2.1 GENERAL

A. The materials and products specified herein reflect the minimum acceptable standards of fabrication and manufacture. All materials and products supplied by the Contractor and specified herein are to be new, unused, of first quality and in original packaging or shipping containers or as shown on drawings.

B. This project will be cabled with Cat 6. Below is the standard (default) number of cables per drop unless specified differently on the drawings. See special systems floor plans for number of cables at each location.

C. The standard office Telecommunications Outlets consists of 2, category 6 cables.

D. Dedicated voice outlets for wall phones consist of 1, category 6 cable.

E. Wireless TO’s mounted in ceilings have 2- category 6 23 AWG cables.

F. Floorbox TO’s in conference rooms will generally have 2, category 6 cables.

2.2 STANDARD WORK AREA TELECOMMUNICATIONS OUTLETS (TO)

A. Standard work area telecommunications outlets shall utilize blue modules/inserts with 45 degree angled jacks, stainless steel hospital grade faceplates, and blanks.

B. Patient monitoring modules/inserts are to be red,

C. For category 6 compliant installations, 6 position faceplates shall be used with owners Approved Horizontal solution products.

D. Single Voice Outlet:

1. Dedicated wall phone outlets shall use a single gang, one port stainless steel faceplate such as Allen-Tel #AT630A-4, stainless steel phone plate or equivalent.

E. Wireless Device Outlets:

1. Shall follow section 2.02 for standard outlets, using only two jacks

PART 3 - EXECUTION

3.1 GENERAL

A. This Section describes the installation locations for the products and materials, as well as methods and Owner's Standards associated with the Telecommunications Installation portions of the Project. These specifications, along with the drawings and other Owner supplied specifications shall be followed during the course of the installation.

B. The contractor is required to be currently listed as a registered Certified Installer of the Horizontal solution bid and provide personnel for telecommunications installations who are certified for those products. See Warranty information 3.10.

C. The Contractor is instructed to coordinate his efforts with the other tradesmen who may be working within the same vicinity to avoid conflict and lost time.

D. The Contractor is required to supply all necessary tools, equipment, accessories, safety equipment, protective clothing, etc., as customary for the craft and necessary for the installation.

E. The Contractor shall verify space requirements and locations with Owner's telecommunication representative before starting cable installations and terminations.

F. All terminations are to use TIA 568B wiring standards.

3.2 TERMINATION

A. Work area TO terminations.

1. Contractor to follow approved Manufacturer procedures for termination instructions for the specific products being installed.

3.3 EQUIPMENT INSTALLATION AND CABLE TERMINATIONS

A. All equipment shall be installed in a neat and workmanlike manner, arranged for convenient operation, testing and future maintenance.

B. All telecommunications cables, faceplates, and connectors shall be installed and terminated by technicians experienced in the installation and termination of telecommunications items listed herein.

C. The Contractor shall employ certified system installation technicians and have at least 2 years experience in the installation of similar and equivalent systems.

D. The Contractor shall supply verification of experience, for this type of work, to the Architect for approval before performing any work.

3.4 AS-BUILT INFORMATION

A. Contractor shall provide as-built information to Owner to accompany all test result information.

B. As-built information shall be in red-lined format on a copy of construction drawings. Indicate location of all TO and riser conduit routes, distribution cable trays, junction boxes, and all additions and deletions pertaining to telecommunications. Include correct TO labeling next to all telecom symbols.

C. If construction drawings are not utilized, Contractor shall provide all telecommunications location information on an accurate scaled floor plan.

3.5 SYSTEM WARRANTY REQUIREMENTS

A. Contractor shall perform all labeling requirements and provide testing documentation for verification as described herein.

B. Contractor shall submit cable records to reflect all moves, adds, and changes.

C. Contractor shall provide floor plans showing locations of all telecommunication outlets and spaces.

D. Contractor shall perform these requirements for category 6 permanent link configurations and submit to the hardware manufacturer such paperwork and test results as necessary to obtain the 20-year minimum system performance guarantee to owner’s telecommunication representative as defined by the cable and hardware manufacturers. The 20-year minimum system warranty

shall be provided to owner's telecommunications representative prior to final payment for this work.

END OF SECTION

27 15 43

SECTION 28 31 11

DIGITAL, ADDRESSABLE FIRE-ALARM SYSTEM

PART 1 - GENERAL

1.1 RELATED DOCUMENTS

A. Drawings and general provisions of the Contract, including General and Supplementary Conditions and Division 1 Specification Sections, apply to this Section.

1.2 SUMMARY

A. This Section includes fire alarm systems, including manual stations, detectors, signal equipment, controls, and devices. Note that this is a performance based specification. Equipment/device quantities and locations indicated are diagrammatic. Design of the fire alarm system, including device placements, selection and quantities, shall be by a NICET level III designer in accordance with the requirements of the New Mexico State Fire Marshall's Office. The design shall be approved by the New Mexico State Fire Marshall's Office. Refer to additional submission requirements below.

B. Related Sections: The following Sections contain requirements that relate to this Section:

1. Division 21 Section "Standpipe and Sprinkler Systems" for coordinating flow, pressure, and valve tamper switch requirements.

1.3 DEFINITION

A. FACP: Fire Alarm Control Panel.

1.4 SYSTEM DESCRIPTION

A. General: Zoned, noncoded, addressable, microprocessor-based fire-detection and alarm system with manual and automatic alarm initiation, analog addressable smoke detectors, and automatic alarm verification for alarms initiated by certain smoke detector zones as indicated, horn notification.

B. Signal Transmission: Multiplex signal transmission dedicated to fire alarm service only.

C. Audible Alarm Indication: By sounding of horns.

D. Visual Alarm Indication: By ADA compliant xenon-strobe-type units.

E. System connections for alarm-initiating and alarm-indicating circuits. Class B wiring.

1.5 SUBMITTALS

A. General: Submit each item in this Article according to the Conditions of the Contract and Division 1 Specification Sections.

B. Product Data for each type of system component specified including dimensioned plans and elevations showing minimum clearances and installed features and devices. Include list of materials and Nationally Recognized Testing Laboratory (NRTL)-listing data.

C. Shop Drawings showing details of graphic annunciator (if included in project).

D. Wiring Diagrams from manufacturer differentiating clearly between factory- and field-installed wiring. Include diagrams for equipment and for system with all terminals and interconnections identified. Make all diagrams specific to this Project and distinguish between field and factory wiring.

E. Floor Plans: Indicate final outlet locations and routings of raceway connections. Plans to include but not be limited to the following:

1. Detection devices
2. Notification devices
3. Panels\equipment cabinets
4. Remote indicating lights
5. Remote test stations

F. Matrix of sequence of operation.

G. Device Address List: Coordinate with final system programming.

H. System operation description covering this specific Project, including method of operation and supervision of each type of circuit and sequence of operations for all manually and automatically initiated system inputs and outputs. Manufacturer's standard descriptions for generic systems are unacceptable. Complete riser/1-line diagram indicating all devices and interconnections.

I. Operating instructions for mounting at the FACP.

J. Product certificates signed by manufacturers of fire alarm system components certifying that their products comply with specified requirements.

K. Maintenance data for fire alarm systems to include in the operation and maintenance manual specified in Division 1. Include data for each type of product, including all features and operating sequences, both automatic and manual. Include recommendations for spare parts to be stocked at the site. Provide the names, addresses, and telephone numbers of service organizations that carry stock of repair parts for the system to be furnished.

L. Submission to Authorities Having Jurisdiction: In addition to routine submission of the above material, make an identical submission to the authorities having jurisdiction. Shop drawing submission to the Texas State Fire Marshall shall meet all requirements stated in the Texas State Fire Marshall's Office Plans Review Submittal Requirements and Information publication. Include Professional Engineer's seal, and design by a NICET Level III technician as part of the

preparation and submission of the shop drawings. Upon receipt of comments from the authorities having jurisdiction, submit them for review. Resubmit if required to make clarifications or revisions to obtain approval. Do not proceed with any work prior to approval from the Texas State Fire Marshall's Office.

M. Record of field tests of system.

N. Battery and voltage drop calculations.

O. Sound pressure level calculations and intelligibility calculations for all spaces in the building.

1.6 QUALITY ASSURANCE

A. Installer Qualifications: Engage an experienced factory-authorized Installer to perform work of this Section.

B. Single-Source Responsibility: Obtain fire alarm components from a single source who assumes responsibility for compatibility of system components.

C. Compliance with Local Requirements: Comply with the applicable building code, local ordinances, and regulations, and the requirements of the authorities having jurisdiction.

D. Comply with NFPA 70.

E. Comply with NFPA 72.

F. Listing and Labeling: Provide fire alarm systems and components specified in this Section that are listed and labeled by Factory Mutual.

1.7 EXTRA MATERIALS

A. Furnish extra materials described below, before installation begins, that match products installed, are packaged with protective covering for storage, and are identified with labels clearly describing contents.

1. Glass Rods for Manual Stations: Quantity equal to 15 percent of the number of manual stations installed; minimum of 6 rods.
2. Lamps for Remote Indicating Lamp Units: Quantity equal to 10 percent of the number of units installed, but not less than 1.
3. Lamps for Strobe Units: Quantity equal to 10 percent of the number of units installed, but not less than 1.
4. Smoke Detectors, and Fire Detectors: Quantity equal to 10 percent of the number of units of each type installed, but not less than 1 of each type.
5. Audible, audible\strobe and strobe units: Quantity equal to 10 percent of the number of units of each type installed, but not less than 5 of each type.
6. Detector Bases: Quantity equal to 2 percent of the number of units of each type installed, but not less than 1 of each type.

1.8 ADDITIONAL WORK

A. In addition to quantities indicated on floor plans, include in the work provide and installing **(2)** two additional of each of the following: smoke detectors, pull stations, control relay modules, audible/strobe units, strobe only, audible/strobe and audible only units. These units are to be installed at direction of the Architect in field during construction. Allow for complete installation including conduit, wire and system capacity.

PART 2 - PRODUCTS

2.1 MANUFACTURERS

A. Manufacturers: Subject to compliance with requirements, provide products by one of the following:

1. Cerberus Pyrotronics; Cerberus Technologies, Inc. Div.
2. Edwards Systems Technology; General Signal Unit
3. Federal Signal Corp.
4. Fire Control Instruments, Inc.
5. Fire Lite Alarms, Inc.
6. Notifier; Pitway Corp. Div.
7. Simplex Time Recorder Co.

2.2 FUNCTIONAL DESCRIPTION OF SYSTEM

A. Include the following system functions and operating features plus those additional functions and features required by the authorities having jurisdiction:

1. Priority of Signals: Accomplish automatic response functions by the first zone initiated. Alarm functions resulting from initiation by the first zone are not altered by subsequent alarms. The highest priority is an alarm signal. Supervisory and trouble signals have second- and third-level priority. Higher-priority signals take precedence over signals of lower priority, even though the lower-priority condition occurred first. Annunciate all alarm signals regardless of priority or order received.
2. Noninterfering: Zone, power, wire, and supervise the system so a signal on one zone does not prevent the receipt of signals from any other zone. All zones are manually resettable from the FACP after the initiating device or devices are restored to normal. Systems that require batteries or battery back-up for the programming function are unacceptable.
3. Fire Alarm Control Panel (FACP) Response: The manual or automatic operation of an alarm-initiating or supervisory-operating device causes the FACP to transmit an appropriate signal including the following:

   a. General alarm.
   b. Fire-suppression system operation alarm.
   c. Smoke or heat detector alarm.
   d. Valve tamper supervisory.

e. System trouble.
f. Fan shutdown.

4. Transmission to Remote Central Station: Automatically route alarm, supervisory, and trouble signals to a remote central station service.
5. Silencing at the FACP: Switches provide capability for acknowledgment of alarm, supervisory, trouble, and other specified signals at the FACP; and capability to silence the local audible signal and light a light-emitting diode (LED). Subsequent zone alarms cause the audible signal to sound again until silenced by switch operation. Restoring alarm, supervisory and trouble conditions to normal extinguishes the associated LED and causes the audible signal to sound again until restoration is acknowledged by switch operation.
6. Loss of primary power at the FACP sounds a trouble signal at the FACP and the annunciator. An emergency power light is illuminated at both locations when the system is operating on an alternate power supply.
7. Annunciation: Manual and automatic operation of alarm- and supervisory-initiating devices is annunciated both on the FACP and on the annunciator, indicating location and type of device.
8. FACP Alphanumeric Display: Displays plain-English-language descriptions and addresses of initiating devices, alarms, trouble signals, supervisory signals, monitoring actions, system and component status, and system commands.
9. General Alarm: A system general alarm includes the following:

    a. Indicating the general alarm condition at the FACP and the annunciator.
    b. Identifying the device that is the source of the alarm (or its zone) at the FACP and the annunciator.
    c. Initiating audible alarms and visible alarm signals throughout the building.
    d. Stopping supply and return fans serving zone where alarm is initiated.
    e. Closing smoke dampers on system serving zone where alarm is initiated.
    f. Unlocking designated doors.
    g. Recording the event on the system.
    h. Initiating transmission of alarm signal to remote central station.

10. Manual station alarm operation initiates a general alarm.
11. Water-flow alarm switch operation:

    a. Initiates a general alarm.
    b. Causes flashing of the device location-indicating lamp for the device that has operated.

12. Smoke detection initiates a general alarm.
13. Sprinkler valve tamper switch operation causes or initiates the following:

    a. A supervisory, audible, and visible "valve tamper" signal indication at the FACP and the annunciator.
    b. The location-indicating light to flash for the device that has operated.
    c. A printed record of the event on the system printer.
    d. Transmission of supervisory signal to remote central station.

14. Remote Detector Sensitivity Adjustment: Manipulation of controls at the FACP causes the selection of specific addressable smoke detectors for adjustment, display of their

current status and sensitivity settings, and control of changes in those settings. The same controls can be used to program repetitive, scheduled, automated changes in sensitivity of specific detectors. Sensitivity adjustments and sensitivity adjustment schedule changes are recorded by the system printer.

B. Recording of Events: Print a record for all alarm, supervisory, and trouble events on the system printer. Printouts are by zone, device, and function. When the FACP receives a signal, the alarm, supervisory, and trouble conditions are printed. The printout includes the type of signal (alarm, supervisory, or trouble) the zone identification, date, and the time of the occurrence. The printout differentiates alarm signals from all other printed indications. When the system is reset, this event is also printed, including the same information for device, location, date, and time. A command initiates the printout of a list of existing alarm, supervisory, and trouble conditions in the system.

1. Permissible Signal Time Elapse: The maximum permissible elapsed time between the actuation of any fire alarm or fire-detection system alarm-initiating device and its indication at the FACP is two (2) seconds.
2. Independent System Monitoring: Supervise each independent smoke- or heat-detection system and duct detector system for both normal operation and trouble.
3. Circuit Supervision: Indicate circuit faults by both a zone and a trouble signal at the FACP. Provide a distinctive indicating audible tone and LED-indicating light. The maximum permissible elapsed time between the occurrence of the trouble condition and its indication at the FACP is 200 seconds**.**

2.3 ADDRESSABLE DEVICES

A. Alarm-Initiating Devices: Classified as addressable devices according to NFPA 72.

1. Communication Transmitter and Receiver: Integral to device. Provides each device with a unique identification and capability for status reporting to the FACP.

2.4 MANUAL PULL STATIONS

A. Description: Double-action type, fabricated of metal or plastic, and finished in red with molded, raised-letter operating instructions of contrasting color.

1. Break-Glass Feature: Stations requiring the breaking of a glass panel are unacceptable. Stations requiring the breaking of a concealed glass rod are acceptable.
2. Station Reset: Key or wrench operated, double pole, double throw, switch rated for the voltage and current at which it operates. Stations have screw terminals for connections.

2.5 SMOKE DETECTORS

A. General: Comply with UL 268. Include the following features:

1. Factory Nameplate: Serial number and type identification.
2. Operating Voltage: 24-V dc, nominal.
3. Self-Restoring: Detectors do not require resetting or readjustment after actuation to

restore them to normal operation.

4. Plug-in Arrangement: Detector and associated encapsulated electronic components are mounted in a module that connects to a fixed base with a twist-locking plug connection. The plug connection requires no springs for secure mounting and contact maintenance. Terminals in the fixed base accept building wiring.
5. Integral Visual Indicating Light: Connect to indicate detector has operated.
6. Remote Controllability: Individually monitor detectors at the FACP for calibration, sensitivity, and alarm condition, and individually adjust for sensitivity from the FACP.

B. Photoelectric Smoke Detectors: Include the following features:

1. Detector Sensitivity: Between 2.5- and 3.5-percent-per-foot (0.008- and 0.011-percent-per-mm) smoke obscuration when tested according to UL 268.
2. Sensor: An infrared detector light source with matching silicon-cell receiver.

C. Duct Smoke Detector: Photoelectric type complying with UL 268A.

1. Detector address shall be accessible from fire-alarm control unit and shall be able to identify the detector's location within the system and its sensitivity setting.
2. Sampling Tube: Design and dimensions as recommended by the manufacturer for the specific duct size and installation conditions where applied.
3. Relay Fan Shutdown: Rated to interrupt fan motor-control circuit.
4. Provide station with status indicator and key operated test switch.

2.6 OTHER DETECTORS

A. Thermal Detector: Combination fixed-temperature and rate-of-rise unit with mounting plate arranged for outlet box mounting; 135 deg F (57 deg C) fixed-temperature setting, except as indicated.

2.7 ALARM-INDICATING DEVICES

A. General: Equip alarm-indicating devices for mounting as indicated. Provide terminal blocks for system connections.

B. Visual Alarm Devices: Xenon strobe lights with clear or nominal white polycarbonate lens. Mount lenses on an aluminum faceplate. The word "FIRE" is engraved in minimum 1-inch (25-mm) high letters on the lens. UL Listed to Standard 1971.

1. Devices have a minimum light output of 115 candela.
2. Strobe Leads: Factory connected to screw terminals.
3. Combination devices consist of factory-combined, audible and visual alarm units in a single mounting assembly.

C. Remote Alarm Indicator: LED type, mounted flush in a single gang wall plate.

1. Connected to indicate the alarm operation of a single detector or other device.
2. Legend: "Alarm."

D. Horns:

1. Electric-vibrating-polarized type, 24-V dc; with provision for housing the operating mechanism behind a grille.
2. Comply with UL 464. Horns shall produce a sound-pressure level of 90 dBA, measured 10 feet (3 m) from the horn, using the coded signal prescribed in UL 464 test protocol.
3. Mounting: Flush, semirecessed, surface, or surface-mounted bidirectional as indicated.

2.8 REMOTE DEVICE LOCATION-INDICATING LIGHTS AND IDENTIFICATION PLATES

A. Description: An LED-indicating light in the vicinity of each device listed below, to denote the associated device is in an abnormal or trouble mode. Lamp is flush mounted in a single gang wall plate. A red, laminated, phenolic-resin identification plate at the indicating light identifies, in engraved white letters, the room where the valve is located or the protected spaces downstream from the water-flow switch.

B. Provide as follows:
1. At each sprinkler water-flow switch and valve tamper switch.
2. At each duct smoke detector (combination indicator + test station).
3. At each detector that is not readily observable from standing at floor level in a finished space.

2.9 MAGNETIC DOOR HOLDERS

A. Description: Units are equipped for wall or floor mounting as indicated and are complete with matching door plate. Electromagnet operates from a 24-V ac source and requires no more than 3 W to develop 25-lbf (111-N) holding force.

B. Material and Finish: Match door hardware.

2.10 CENTRAL FIRE ALARM CONTROL PANEL (FACP)

A. General: Comply with UL 864.

B. Cabinet: Lockable steel enclosure. Arrange panel so all operations required for testing or for normal care and maintenance of the system are performed from the front of the enclosure. If more than a single unit is required to form a complete control panel, provide exactly matching modular unit enclosures. Accommodate all components and allow ample gutter space for interconnection of panels and field wiring. Identify each enclosure by an engraved, red, laminated, phenolic-resin nameplate. Lettering on the enclosure's nameplate shall not be less than 1 inch (25 mm) high. Identify individual components and modules within the cabinets with permanent labels.

C. Systems: Alarm and supervisory systems are separate and independent in the FACP. The alarm-initiating zone boards in the FACP consist of plug-in cards. Construction requiring removal of field wiring for module replacement is unacceptable.

D. Control Modules: Types and capacities required to perform all functions of the fire alarm systems. Local, visible, and audible signals announce alarm, supervisory, and trouble conditions. Each type of audible alarm has a different sound.

E. Zones: Provide for all alarm and supervisory zones indicated.

F. Resetting: Provide the necessary controls to prevent the resetting of any alarm, supervisory, or trouble signal while the alarm or trouble condition still exists.

G. Alphanumeric Display and System Controls: Arrange to provide the basic interface between human operator at the FACP and addressable system components, including annunciation, supervision, and control. A display with a minimum of 32 characters shows alarm, supervisory and component status messages and indicates control commands to be entered into the system for control of smoke detector sensitivity and other parameters. Arrange keypad for use in entering and executing control commands.

H. Instructions: Printed or typewritten instruction card mounted behind a lexan plastic or glass cover in a stainless steel or aluminum frame. Install the frame in a location observable from the FACP. Include interpretation and appropriate response for displays and signals, and briefly describe the functional operation of the system under normal, alarm, and trouble conditions.

2.11 SYSTEM PRINTER

A. General: Printer is dot-matrix type, listed and labeled as an integral part of the fire alarm system.

2.12 EMERGENCY POWER SUPPLY

A. General: Components include nickel-cadmium-type battery, charger, and an automatic transfer switch. Battery nominal life expectancy is 20 years, minimum.

B. Battery capacity is adequate to operate the complete alarm system in normal or supervisory (nonalarm) mode for a period of 24 hours. At the end of this period, the battery has sufficient capacity to operate the system, including alarm-indicating devices in either alarm or supervisory mode, for a period of 15 minutes.

1. Magnetic door holders are not served by emergency power. Magnetic door holders are released when normal power fails.

C. Battery Charger: Solid-state, fully automatic, variable-charging-rate type. Provide capacity for 150 percent of the connected system load while maintaining the batteries at full charge. In the event batteries are fully discharged, the charger recharges them completely within 4 hours. Charger output is supervised as part of system power supply supervision.

D. Integral Automatic Transfer Switch: Transfers the load to the battery without loss of signals or status indications when normal power fails.

2.13 WIRE

A. Wire: Solid-copper conductors with 600-V rated, 75 deg C, color-coded insulation.

1. Low-Voltage Circuits: No. 16 AWG, minimum.

2. Line-Voltage Circuits: No. 12 AWG, minimum.

2.14 UNIVERSAL DIGITAL ALARM COMMUNICATOR TRANSMITTER (UDACT)

A. Provide a UDACT at the FACP. Program, connect and configure to communicate with monitoring agency as instructed by Architect. UDACT shall be Notifier #UDACT or equal.

PART 3 - EXECUTION

3.1 INSTALLATION, GENERAL

A. Install system according to NFPA standards referenced in Parts 1 and 2 of this Section.

B. Fire Alarm Power Supply Disconnect: Paint red and label "FIRE ALARM." Provide with lockable handle or cover.

3.2 EQUIPMENT INSTALLATION

A. Manual Pull Stations: Mount semiflush in recessed back boxes with operating handles 48 inches (1220 mm) above the finished floor or lower as indicated.

B. Water-Flow Detectors and Valve Supervisory Switches: Connect for each sprinkler valve station required to be supervised.

C. Smoke Detectors: Install ceiling-mounted detectors not less than 4 inches (100 mm) from a side wall to the near edge. Install detectors located on the wall at least 4 inches (100 mm), but not more than 12 inches (300 mm), below the ceiling. For exposed solid-joist construction, mount detectors on the bottom of the joists. On smooth ceilings, install detectors not over 30 feet (9 m) apart in any direction. Install detectors no closer than 60 inches (1520 mm) from air registers.

D. Audible Alarm-Indicating Devices: Install not less than 90 inches (2280 mm) above the finished floor nor less than 6 inches (150 mm) below the ceiling. Install bells and horns on flush-mounted back boxes with the device-operating mechanism concealed behind a grille or as indicated. Combine audible and visual alarms at the same location into a single unit.

E. Visual Alarm-Indicating Devices: Install adjacent to each alarm bell or alarm horn and not more than 80 inches (2030 mm) above the finished floor and at least 6 inches (150 mm) below the ceiling.

F. Device Location-Indicating Lights: Locate in public space near the device they monitor.

G. Remote status\test station: Locate in public space near the device they monitor.

H. FACP: Surface mount with tops of cabinets not more than 72 inches (1830 mm) above the finished floor.

3.3 WIRING INSTALLATION

A. Wiring Method: Install wiring in metal raceway according to Division 26 Section "Raceways, Boxes, and Cabinets." Conceal raceway except in unfinished spaces and as indicated.

1. All wiring installed in a metal raceway. Fire Alarm rated red MC cable acceptable in concealed locations.

B. Wiring within Enclosures: Install conductors parallel with or at right angles to the sides and back of the enclosure. Bundle, lace, and train the conductors to terminal points with no excess. Connect conductors that are terminated, spliced, or interrupted in any enclosure associated with the fire alarm system to terminal blocks. Mark each terminal according to the system's wiring diagrams. Make all connections with approved crimp-on terminal spade lugs, pressure-type terminal blocks, or plug connectors.

C. Cable Taps: Use numbered terminal strips in junction, pull or outlet boxes, cabinets, or equipment enclosures where circuit connections are made.

D. Color Coding: Color-code fire alarm conductors differently from the normal building power wiring. Use one color code for alarm circuit wiring and a different color code for supervisory circuits. Color-code audible alarm-indicating circuits differently from alarm-initiating circuits. Use different colors for visual alarm-indicating devices. Paint fire alarm system junction boxes and covers red.

E. Wiring to Central-Station Transmitter: 1-inch (27) GRC between the FACP and the central-station transmitter connection as indicated. Install number of conductors and electrical supervision for connecting wiring as needed to suit central-station monitoring function. Final connections to terminals in central-station transmitter are made under another contract.

3.4 IDENTIFICATION

A. Identify system components, wiring, cabling, and terminals according to Division 26 Section "Electrical Identification."

3.5 GROUNDING

A. Ground cable shields and equipment according to system manufacturer's instructions to eliminate shock hazard and to minimize, to the greatest extent possible, ground loops, common mode returns, noise pickup, cross talk, and other impairments.

B. Signal Ground Terminal: Locate at main equipment rack or cabinet. Isolate from power system and equipment grounding.

C. Install grounding electrodes of type, size, location, and quantity as indicated. Comply with installation requirements of Division 26 Section "Grounding."

D. Ground equipment and conductor and cable shields. For audio circuits, minimize, to the greatest extent possible, ground loops, common mode returns, noise pickup, cross talk, and other impairments. Provide 5-ohm ground at main equipment location. Measure, record, and

report ground resistance.

3.6 FIELD QUALITY CONTROL

A. Manufacturer's Field Service: Provide services of a factory-authorized service representative to supervise the field assembly and connection of components and the pretesting, testing, and adjustment of the system.

B. Pretesting: After installation, align, adjust, and balance the system and perform complete pretesting. Determine, through pretesting, the conformance of the system to the requirements of the Drawings and Specifications. Correct deficiencies observed in pretesting. Replace malfunctioning or damaged items with new ones and retest until satisfactory performance and conditions are achieved. Prepare forms for systematic recording of acceptance test results.

C. Report of Pretesting: After pretesting is complete, provide a letter certifying the installation is complete and fully operable, including the names and titles of the witnesses to the preliminary tests.

D. Final Test Notice: Provide a 10-day minimum notice in writing when the system is ready for final acceptance testing.

E. Minimum System Tests: Test the system according to the procedures outlined in NFPA 72. Minimum required tests are as follows:

1. Verify the absence of unwanted voltages between circuit conductors and ground.
2. Test all conductors for short circuits using an insulation-testing device.
3. With each circuit pair, short circuit at the far end of the circuit and measure the circuit resistance with an ohmmeter. Record the circuit resistance of each circuit on the record drawings.
4. Verify that the control unit is in the normal condition as detailed in the manufacturer's operation and maintenance manual.
5. Test initiating and indicating circuits for proper signal transmission under open circuit conditions. One connection each should be opened at not less than 10 percent of the initiating and indicating devices. Observe proper signal transmission according to class of wiring used.
6. Test each initiating and indicating device for alarm operation and proper response at the control unit. Test smoke detectors with actual products of combustion.
   Test the system for all specified functions according to the approved operation and maintenance manual. Systematically initiate specified functional performance items at each station, including making all possible alarm and monitoring initiations and using all communications options. For each item, observe related performance at all devices required to be affected by the item under all system sequences. Observe indicating lights, displays, signal tones, and annunciator indications.
7. Test Both Primary and Secondary Power: Verify by test that the secondary power system is capable of operating the system for the period and in the manner specified.

F. Retesting: Correct deficiencies indicated by tests and completely retest work affected by such deficiencies. Verify by the system test that the total system meets the Specifications and complies with applicable standards.

G. Report of Tests and Inspections: Provide a written record of inspections, tests, and detailed test results in the form of a test log. Submit log upon the satisfactory completion of tests.

H. Tag all equipment, stations, and other components at which tests have been satisfactorily completed.

3.7 CLEANING AND ADJUSTING

A. Cleaning: Remove paint splatters and other spots, dirt, and debris. Touch up scratches and marred finish to match original finish. Clean unit internally using methods and materials recommended by manufacturer.

3.8 DEMONSTRATION

A. Startup Services: Engage a factory-authorized service representative to provide startup service and to demonstrate and train Owner's maintenance personnel as specified below.

1. Train Owner's maintenance personnel on procedures and schedules related to startup and shutdown, troubleshooting, servicing, adjusting, and preventive maintenance. Provide a minimum of eight (8) hours' training.
2. Training Aid: Use the approved final version of the operation and maintenance manual as a training aid.
3. Schedule training with Owner with at least seven (7) days advance notice.

3.9 ON-SITE ASSISTANCE

A. Occupancy Adjustments: When requested within one year of date of Substantial Completion, provide on-site assistance in adjusting sound levels, controls, and sensitivities to suit actual occupied conditions. Provide up to 3 requested adjustment visits to the site for this purpose.

END OF SECTION

28 31 11

THIS PAGE IS BLANK

SECTION 31 1000

SITE CLEARING

PART 1 GENERAL

1.01 SECTION INCLUDES

A. Clearing and protection of vegetation.

B. Removal of existing debris.

1.02 RELATED REQUIREMENTS

A. Perform all work in accordance with the American Public Works Association New Mexico Chapter, New Mexico Standard Specifications for Public Works Construction (Latest Edition).

B. Section 01 1000 - Summary: Limitations on Contractor's use of site and premises.

C. Section 01 1000 - Summary: Sequencing and staging requirements.

D. Section 01 5000 - Temporary Facilities and Controls: Site fences, security, protective barriers, and waste removal.

E. Section 01 7000 - Execution and Closeout Requirements: Project conditions; protection of bench marks, survey control points, and existing construction to remain; reinstallation of removed products.

F. Section 31 2200 - Grading: Topsoil removal.

G. Section 31 2200 - Grading: Fill material for filling holes, pits, and excavations generated as a result of removal operations.

H. Section 31 2323 - Fill: Fill material for filling holes, pits, and excavations generated as a result of removal operations.

I. Section 31 2323 - Fill: Filling holes, pits, and excavations generated as a result of removal operations.

1.03 QUALITY ASSURANCE

A. Perform all work in accordance with the American Public Works Association New Mexico Chapter, New Mexico Standard Specifications for Public Works Construction (Latest Edition).

PART 2 PRODUCTS

2.01 MATERIALS

A. Fill Material: As specified in Section 31 2200 - Grading

PART 3 EXECUTION

3.01 SITE CLEARING

A. Comply with other requirements specified in Section 01 7000.

B. Minimize production of dust due to clearing operations; do not use water if that will result in ice, flooding, sedimentation of public waterways or storm sewers, or other pollution.

3.02 EXISTING UTILITIES AND BUILT ELEMENTS

A. Coordinate work with utility companies; notify before starting work and comply with their requirements; obtain required permits.

B. Protect existing utilities to remain from damage.

C. Do not disrupt public utilities without permit from authority having jurisdiction.

D. Protect existing structures and other elements that are not to be removed.

3.03 VEGETATION

A. Scope: Remove trees, shrubs, brush, and stumps in areas to be covered by building structure, paving, playing fields, lawns, and planting beds.

B. Do not begin clearing until vegetation to be relocated has been removed.

C. Do not remove or damage vegetation beyond the following limits:
   1. 40 feet outside the building perimeter.
   2. 10 feet each side of surface walkways, patios, surface parking, and utility lines less than 12 inches in diameter.

3. 15 feet each side of roadway curbs and main utility trenches.
4. 25 feet outside perimeter of pervious paving areas that must not be compacted by construction traffic.
5. Exception: Specific trees and vegetation indicated on drawings to be removed.
6. Exception: Selective thinning of undergrowth specified elsewhere.

D. Install substantial, highly visible fences at least 3 feet high to prevent inadvertent damage to vegetation to remain:
1. At vegetation removal limits.
2. Around trees to remain within vegetation removal limits; locate no closer to tree than at the drip line.
3. Around other vegetation to remain within vegetation removal limits.

E. In areas where vegetation must be removed but no construction will occur other than pervious paving, remove vegetation with minimum disturbance of the subsoil.

F. Vegetation Removed: Do not burn, bury, landfill, or leave on site, except as indicated.
1. Chip, grind, crush, or shred vegetation for mulching, composting, or other purposes; preference should be given to on-site uses.
2. Trees: Sell if marketable; if not, treat as specified for other vegetation removed; remove stumps and roots to depth of 18 inches.
3. Sod: Re-use on site if possible; otherwise sell if marketable, and if not, treat as specified for other vegetation removed.
4. Fill holes left by removal of stumps and roots, using suitable fill material, with top surface neat in appearance and smooth enough not to constitute a hazard to pedestrians.

G. Dead Wood: Remove all dead trees (standing or down), limbs, and dry brush on entire site; treat as specified for vegetation removed.

H. Restoration: If vegetation outside removal limits or within specified protective fences is damaged or destroyed due to subsequent construction operations, replace at no cost to Owner.

3.04 DEBRIS

A. Remove debris, junk, and trash from site.

B. Leave site in clean condition, ready for subsequent work.

C. Clean up spillage and wind-blown debris from public and private lands.

END OF SECTION

SECTION 31 2200

GRADING

PART 1 GENERAL

1.01 SECTION INCLUDES

A. Removal of topsoil.

B. Rough grading and clearing the site for structures, building pads, and roadway improvements.

C. Finish grading.

1.02 RELATED REQUIREMENTS

A. Perform all work in accordance with the American Public Works Association New Mexico Chapter, New Mexico Standard Specifications for Public Works Construction (Latest Edition).

B. Section 31 1000 - Site Clearing.

C. Section 31 2316 - Excavation.

D. Section 31 2323 - Fill: Filling and compaction.

1.03 SUBMITTALS

A. Project Record Documents: Accurately record actual locations of utilities remaining by horizontal dimensions, elevations or inverts, and slope gradients.

1.04 QUALITY ASSURANCE

A. Perform all work in accordance with the American Public Works Association New Mexico Chapter, New Mexico Standard Specifications for Public Works Construction (Latest Edition).

1.05 PROJECT CONDITIONS

A. Protect above- and below-grade utilities that remain.

B. Protect bench marks, survey control points, existing structures, fences, sidewalks,

paving, and curbs from grading equipment and vehicular traffic.

PART 2 PRODUCTS

2.01 MATERIALS

A. Topsoil: See Section 31 2323.

B. Other Fill Materials: See Section 31 2323.

PART 3 EXECUTION

3.01 EXAMINATION

A. Verify that survey bench mark and intended elevations for the Work are as indicated.

3.02 PREPARATION

A. Identify required lines, levels, contours, and datum.

B. Stake and flag locations of known utilities.

C. Locate, identify, and protect from damage above- and below-grade utilities to remain.

D. Notify utility company to remove and relocate utilities.

3.03 ROUGH GRADING

A. Remove topsoil from areas to be further excavated, re-landscaped, or re-graded, without mixing with foreign materials.

B. Do not remove topsoil when wet.

C. Remove subsoil from areas to be further excavated, re-landscaped, or re-graded.

D. Do not remove wet subsoil, unless it is subsequently processed to obtain optimum moisture content.

E. When excavating through roots, perform work by hand and cut roots with sharp axe.

F. See Section 31 2323 for filling procedures.

G. Benching Slopes: Horizontally bench existing slopes greater than 1:4 to key fill material to slope for firm bearing.

H. Stability: Replace damaged or displaced subsoil to same requirements as for specified fill.

3.04 SOIL REMOVAL

A. Remove excavated topsoil from site.

B. Stockpile excavated subsoil on site.

C. Stockpiles: Use areas designated on site; pile depth not to exceed 8 feet; protect from erosion.

3.05 FINISH GRADING

A. Before Finish Grading:
   1. Verify building and trench backfilling have been inspected.
   2. Verify subgrade has been contoured and compacted.

B. Remove debris, roots, branches, stones, in excess of 1/2 inch in size. Remove soil contaminated with petroleum products.

C. Where topsoil is to be placed, scarify surface to depth of 3 inches.

D. In areas where vehicles or equipment have compacted soil, scarify surface to depth of 3 inches.

E. Place topsoil in areas where seeding are indicated.

F. Place topsoil where required to level finish grade.

G. Place topsoil to thickness as scheduled.

H. Place topsoil during dry weather.

I. Remove roots, weeds, rocks, and foreign material while spreading.

J. Near plants spread topsoil manually to prevent damage.

K. Fine grade topsoil to eliminate uneven areas and low spots. Maintain profiles and contour of subgrade.

L. Lightly compact placed topsoil.

3.06 TOLERANCES

A. Top Surface of Subgrade: Plus or minus 0.10 foot (1-3/16 inches) from required elevation.

B. Top Surface of Finish Grade: Plus or minus 0.04 foot (1/2 inch).

C. Top Surface of Subgrade: Plus or minus 1/10 foot from required elevation.

D. Top Surface of Finish Grade: Plus or minus 1/2 inch.

3.07 FIELD QUALITY CONTROL

A. See Section 31 2323 for compaction density testing.

3.08 CLEANING

A. Remove unused stockpiled topsoil and subsoil. Grade stockpile area to prevent standing water.

B. Leave site clean and raked, ready to receive landscaping.

END OF SECTION

SECTION 31 2316

EXCAVATION

PART 1 GENERAL

1.01 SECTION INCLUDES

A. Excavating for building volume below grade, footings, pile caps, slabs-on-grade, paving, site structures, and utilities within the building.

B. Trenching for utilities outside the building to utility main connections.

1.02 RELATED REQUIREMENTS

A. Perform all work in accordance with the American Public Works Association New Mexico Chapter, New Mexico Standard Specifications for Public Works Construction (Latest Edition).

B. Section 31 2200 - Grading: Soil removal from surface of site.

C. Section 31 2200 - Grading: Grading.

D. Section 31 2323 - Fill: Fill materials, filling, and compacting.

1.03 PROJECT CONDITIONS

A. Verify that survey bench mark and intended elevations for the Work are as indicated.

B. Protect plants, lawns, rock outcroppings, and other features to remain.

C. Protect bench marks, survey control points, existing structures, fences, sidewalks, paving, and curbs from excavating equipment and vehicular traffic.

PART 3 EXECUTION

3.01 PREPARATION

A. Identify required lines, levels, contours, and datum locations.

B. See Section 31 2200 for additional requirements.

3.02 EXCAVATING

A. Underpin adjacent structures that could be damaged by excavating work.

B. Excavate to accommodate new structures and construction operations.

C. Notify Architect of unexpected subsurface conditions and discontinue affected Work in area until notified to resume work.

D. Preparation for Piling Work: Excavate to working elevations. Coordinate special requirements for piling.

E. Slope banks of excavations deeper than 4 feet to angle of repose or less until shored.

F. Do not interfere with 45 degree bearing splay of foundations.

G. Cut utility trenches wide enough to allow inspection of installed utilities.

H. Hand trim excavations. Remove loose matter.

I. Correct areas that are over-excavated and load-bearing surfaces that are disturbed; see Section 31 2323.

J. Grade top perimeter of excavation to prevent surface water from draining into excavation.

K. Remove excavated material that is unsuitable for re-use from site.

L. Stockpile excavated material to be re-used in area designated on site in accordance with Section 31 2200.

M. Remove excess excavated material from site.

3.03 FIELD QUALITY CONTROL

A. See Section 01 4000 - Quality Requirements, for general requirements for field inspection and testing.

B. Provide for visual inspection of load-bearing excavated surfaces before placement of foundations.

3.04 PROTECTION

A. Prevent displacement of banks and keep loose soil from falling into excavation; maintain soil stability.

B. Protect bottom of excavations and soil adjacent to and beneath foundation from freezing.

END OF SECTION

SECTION 31 2316.13

TRENCHING

PART 1 GENERAL

1.01 SECTION INCLUDES

A. Backfilling and compacting for utilities outside the building to utility main connections.

1.02 RELATED REQUIREMENTS

A. Perform all work in accordance with the American Public Works Association New Mexico Chapter, New Mexico Standard Specifications for Public Works Construction (Latest Edition).

B. Section 31 2200 - Grading: Site grading.

C. Section 31 2316 - Excavation: Building and foundation excavating.

D. Section 31 2323 - Fill: Backfilling at building and foundations.

1.03 REFERENCES

A. Perform all work in accordance with the American Public Works Association New Mexico Chapter, New Mexico Standard Specifications for Public Works Construction (Latest Edition).

B. AASHTO T 180 - Standard Specification for Moisture-Density Relations of Soils Using a 4.54 kg (10-lb) Rammer and a 457 mm (18 in.) Drop; American Association of State Highway and Transportation Officials; 2010.

C. ASTM C136 - Standard Test Method for Sieve Analysis of Fine and Coarse Aggregates; 2006.

D. ASTM D698 - Standard Test Methods for Laboratory Compaction Characteristics of Soil Using Standard Effort (12,400 ft-lbf/ft3 (600 kN-m/m3)); 2012.

E. ASTM D1556 - Standard Test Method for Density and Unit Weight of Soil in Place by the Sand-Cone Method; 2007.

F. ASTM D1557 - Standard Test Methods for Laboratory Compaction Characteristics of Soil Using Modified Effort (56,000 ft-lbf/ft3 (2,700 kN m/m3)); 2012.

G. ASTM D2167 - Standard Test Method for Density and Unit Weight of Soil in Place by the Rubber Balloon Method; 2008.

H. ASTM D2487 - Standard Practice for Classification of Soils for Engineering Purposes (Unified Soil Classification System); 2011.

I. ASTM D 2922 - Standard Test Methods for Density of Soil and Soil-Aggregate in Place by Nuclear Methods (Shallow Depth); 2005.

J. ASTM D3017 - Standard Test Method for Water Content of Soil and Rock in Place by Nuclear Methods (Shallow Depth); 2005.

K. ASTM D4318 - Standard Test Methods for Liquid Limit, Plastic Limit, and Plasticity Index of Soils; 2010.

L. ASTM D6938 - Standard Test Method for In-Place Density and Water Content of Soil and Soil-Aggregate by Nuclear Methods (Shallow Depth); 2010

1.04 SUBMITTALS

A. See Section 01 3000 - Administrative Requirements, for submittal procedures.

B. Compaction Density Test Reports.

1.05 DELIVERY, STORAGE, AND HANDLING

A. When necessary, store materials on site in advance of need.

B. When fill materials need to be stored on site, locate stockpiles where indicated by architect and/or construction manager.

1. Separate differing materials with dividers or stockpile separately to prevent intermixing.
2. Prevent contamination.
3. Protect stockpiles from erosion and deterioration of materials.

PART 2 PRODUCTS

2.01 FILL MATERIALS

A. Perform all work in accordance with the American Public Works Association New Mexico Chapter, New Mexico Standard Specifications for Public Works Construction (Latest Edition).

PART 3 EXECUTION

3.01 EXAMINATION

3.02 TRENCHING

A. Notify Architect of unexpected subsurface conditions and discontinue affected Work in area until notified to resume work.

B. Slope banks of excavations deeper than 4 feet to angle of repose or less until shored.

C. Do not interfere with 45 degree bearing splay of foundations.

D. Cut trenches wide enough to allow inspection of installed utilities.

E. Hand trim excavations. Remove loose matter.

F. Remove excavated material that is unsuitable for re-use from site.

G. Remove excess excavated material from site.

3.03 PREPARATION FOR UTILITY PLACEMENT

A. Cut out soft areas of subgrade not capable of compaction in place. Backfill with general fill.

B. Compact subgrade to density equal to or greater than requirements for subsequent fill material.

C. Until ready to backfill, maintain excavations and prevent loose soil from falling into excavation.

3.04 BACKFILLING

A. Backfill to contours and elevations indicated using unfrozen materials.

B. Employ a placement method that does not disturb or damage other work.

C. Systematically fill to allow maximum time for natural settlement. Do not fill over porous, wet, frozen or spongy subgrade surfaces.

D. Maintain optimum moisture content of fill materials to attain required compaction density.

E. Slope grade away from building minimum 2 inches in 10 ft, unless noted otherwise. Make gradual grade changes. Blend slope into level areas.

F. Correct areas that are over-excavated.

1. Other areas: Use general fill, flush to required elevation, compacted to minimum 97 percent of maximum dry density.

G. Compaction Density Unless Otherwise Specified or Indicated:

H. Reshape and re-compact fills subjected to vehicular traffic.

3.05 BEDDING AND FILL AT SPECIFIC LOCATIONS

A. Perform all work in accordance with the American Public Works Association New Mexico Chapter, New Mexico Standard Specifications for Public Works Construction (Latest Edition).

3.06 FIELD QUALITY CONTROL

A. Perform compaction testing in accordance with the results contained in the geotechnical tests prepared by GEO-TEST INC., GEOTECHNICAL ENGINEERING SERVICES REPORT NO. 1-90208, Dated April 11, 2019.

B. See Section 01 4000 - Quality Requirements, for general requirements for field inspection and testing.

C. Perform compaction density testing on compacted fill in accordance with ASTM D1556, ASTM D2167, ASTM D2922, or ASTM D3017.

D. Evaluate results in relation to compaction curve determined by testing uncompacted material in accordance with ASTM D698 ("standard Proctor"), ASTM D1557 ("modified Proctor"), or AASHTO T 180.

E. If tests indicate work does not meet specified requirements, remove work, replace and retest.

END OF SECTION

SECTION 31 2323

FILL

PART 1 GENERAL

1.01 SECTION INCLUDES

A. Filling, backfilling, and compacting for building volume below grade.

B. Backfilling and compacting for utilities outside the building to utility main connections.

C. Filling holes, pits, and excavations generated as a result of removal (demolition) operations.

1.02 RELATED REQUIREMENTS

A. Perform all work in accordance with the American Public Works Association New Mexico Chapter, New Mexico Standard Specifications for Public Works Construction (Latest Edition).

B. Section 31 2200 - Grading: Removal and handling of soil to be re-used.

C. Section 31 2200 - Grading: Site grading.

D. Section 31 2316 - Excavation: Removal and handling of soil to be re-used.

E. Section 31 3700 - Riprap.

1.03 REFERENCE STANDARDS

A. Perform all work in accordance with the American Public Works Association New Mexico Chapter, New Mexico Standard Specifications for Public Works Construction (Latest Edition).

B. AASHTO T 180 - Standard Specification for Moisture-Density Relations of Soils Using a 4.54 kg (10-lb) Rammer and a 457 mm (18 in.) Drop; American Association of State Highway and Transportation Officials; 2010.

C. ASTM C136 - Standard Test Method for Sieve Analysis of Fine and Coarse Aggregates; 2006.

D. ASTM D698 - Standard Test Methods for Laboratory Compaction Characteristics of Soil Using Standard Effort (12,400 ft-lbf/ft3 (600 kN-m/m3)); 2012.

E. ASTM D1556 - Standard Test Method for Density and Unit Weight of Soil in Place by the Sand-Cone Method; 2007.

F. ASTM D1557 - Standard Test Methods for Laboratory Compaction Characteristics of Soil Using Modified Effort (56,000 ft-lbf/ft3 (2,700 kN m/m3)); 2012.

G. ASTM D2167 - Standard Test Method for Density and Unit Weight of Soil in Place by the Rubber Balloon Method; 2008.

H. ASTM D2487 - Standard Practice for Classification of Soils for Engineering Purposes (Unified Soil Classification System); 2011.

I. ASTM D 2922 - Standard Test Methods for Density of Soil and Soil-Aggregate in Place by Nuclear Methods (Shallow Depth); 2005.

J. ASTM D3017 - Standard Test Method for Water Content of Soil and Rock in Place by Nuclear Methods (Shallow Depth); 2005.

K. ASTM D4318 - Standard Test Methods for Liquid Limit, Plastic Limit, and Plasticity Index of Soils; 2010.

L. ASTM D6938 - Standard Test Method for In-Place Density and Water Content of Soil and Soil-Aggregate by Nuclear Methods (Shallow Depth); 2010.

1.04 DEFINITIONS

A. Finish Grade Elevations: Indicated on drawings.

B. Subgrade Elevations: Indicated on drawings.

1.05 DELIVERY, STORAGE, AND HANDLING

A. When necessary, store materials on site in advance of need.

B. When fill materials need to be stored on site, locate stockpiles where indicated.

1. Separate differing materials with dividers or stockpile separately to prevent intermixing.

2. Prevent contamination.
3. Protect stockpiles from erosion and deterioration of materials.

C. Verify that survey bench marks and intended elevations for the Work are as indicated.

PART 2 PRODUCTS

2.01 FILL MATERIALS

A. Perform all work in accordance with the American Public Works Association New Mexico Chapter, New Mexico Standard Specifications for Public Works Construction (Latest Edition).

B. Concrete for Fill: Lean concrete.

C. Topsoil: See Section 31 2200.

PART 3 EXECUTION

3.01 EXAMINATION

A. Identify required lines, levels, contours, and datum locations.

B. See Section 31 2200 for additional requirements.

C. Verify subdrainage, dampproofing, or waterproofing installation has been inspected.

D. Verify structural ability of unsupported walls to support imposed loads by the fill.

E. Verify underground tanks are anchored to their own foundations to avoid flotation after backfilling.

3.02 PREPARATION

A. Scarify subgrade surface to a depth of 6 inches to identify soft spots.

B. Cut out soft areas of subgrade not capable of compaction in place. Backfill with general fill.

C. Compact subgrade to density equal to or greater than requirements for subsequent fill material.

D. Until ready to fill, maintain excavations and prevent loose soil from falling into excavation.

3.03 FILLING

A. Fill to contours and elevations indicated using unfrozen materials.

B. Fill up to subgrade elevations unless otherwise indicated.

C. Employ a placement method that does not disturb or damage other work.

D. Systematically fill to allow maximum time for natural settlement. Do not fill over porous, wet, frozen or spongy subgrade surfaces.

E. Maintain optimum moisture content of fill materials to attain required compaction density.

F. Slope grade away from building minimum 2 inches in 10 ft, unless noted otherwise. Make gradual grade changes. Blend slope into level areas.

G. Correct areas that are over-excavated.
   1. Load-bearing foundation surfaces: Fill with concrete.
   2. Other areas: Use general fill, flush to required elevation, compacted to minimum 97 percent of maximum dry density.

H. Compaction Density Unless Otherwise Specified or Indicated:

I. Reshape and re-compact fills subjected to vehicular traffic.

3.04 FILL AT SPECIFIC LOCATIONS

A. Use general fill unless otherwise specified or indicated. See section 31-2300 Excavation, Backfill & Compaction for Structures.

3.05 FIELD QUALITY CONTROL

A. Perform compaction testing in accordance with the results contained in the geotechnical tests prepared by GEO-TEST INC., GEOTECHNICAL ENGINEERING SERVICES REPORT NO. 1-90208, Dated April 11, 2019.

B. See Section 01 4000 - Quality Requirements, for general requirements for field

inspection and testing.

C. Perform compaction density testing on compacted fill in accordance with ASTM D1556, ASTM D2167, ASTM D2922, or ASTM D3017.

D. Evaluate results in relation to compaction curve determined by testing uncompacted material in accordance with ASTM D698 ("standard Proctor"), ASTM D1557 ("modified Proctor"), or AASHTO T 180.

E. If tests indicate work does not meet specified requirements, remove work, replace and retest.

3.06 CLEANING

A. Leave unused materials in a neat, compact stockpile.

B. Remove unused stockpiled materials, leave area in a clean and neat condition. Grade stockpile area to prevent standing surface water.

C. Leave borrow areas in a clean and neat condition. Grade to prevent standing surface water.

END OF SECTION

SECTION 31 3700

RIPRAP

PART 1 GENERAL

1.01 SECTION INCLUDES

A. Riprap.

1.02 RELATED REQUIREMENTS

A. Perform all work in accordance with the American Public Works Association New Mexico Chapter, New Mexico Standard Specifications for Public Works Construction (Latest Edition).

B. Section 31 2323 - Fill: Aggregate requirements.

1.03 QUALITY ASSURANCE

A. Perform all work in accordance with the American Public Works Association New Mexico Chapter, New Mexico Standard Specifications for Public Works Construction (Latest Edition).

B. Maintain one copy of each document on site.

PART 2 PRODUCTS

2.01 MATERIALS

A. Riprap: Perform all work in accordance with the American Public Works Association New Mexico Chapter, New Mexico Standard Specifications for Public Works Construction (Latest Edition).

B. Aggregate: Granular fill as specified in Section 31 2323.

PART 3 EXECUTION

3.01 EXAMINATION

A. Do not place riprap bags over frozen or spongy subgrade surfaces.

3.02 PLACEMENT

A. Place geotextile fabric over substrate, lap edges and ends.

B. Place riprap at culvert pipe ends, embankment slopes, and at locations specified in plans.

C. Place into position. Knead, ram, or pack filled bags to conform to contour of adjacent material and other bags previously placed.

D. Reference sheet C-101 for shape and dimensions. Reference sheet C-502 for required thickness.

E. Place rock evenly and carefully over bagged riprap to minimize voids, do not tear bag fabric, place bags and rock in one consistent operation to preclude disturbance or displacement of substrate.

F. After placement, spray with water to moisten the bagged mix. Maintain moist for 24 hours.

3.03 SCHEDULES

A. Culvert Pipe Ends: Bagged, placed one layer thick, 6 inch average thickness, concealed with topsoil fill.

B. Sloped Grade At Retaining Wall: Individual riprap units, 6 inch thickness; placed prior to finish topsoil.

END OF SECTION

SECTION 32 1123

AGGREGATE BASE COURSES

PART 1 GENERAL

1.01 SECTION INCLUDES

A. Aggregate base course.

B. Paving aggregates.

1.02 RELATED REQUIREMENTS

A. Perform all work in accordance with the American Public Works Association New Mexico Chapter, New Mexico Standard Specifications for Public Works Construction (Latest Edition).

B. Section 31 2200 - Grading: Preparation of site for base course.

C. Section 31 2323 - Fill: Compacted fill under base course.

D. Section 32 1216 - Asphalt Paving: Binder and finish asphalt courses.

1.03 REFERENCE STANDARDS

A. Perform all work in accordance with the American Public Works Association New Mexico Chapter, New Mexico Standard Specifications for Public Works Construction (Latest Edition).

B. AASHTO M 147 - Standard Specification for Materials for Aggregate and Soil-Aggregate Subbase, Base and Surface Courses; American Association of State Highway and Transportation Officials; 1965 (2004).

C. AASHTO T 180 - Standard Specification for Moisture-Density Relations of Soils Using a 4.54 kg (10-lb) Rammer and a 457 mm (18 in.) Drop; American Association of State Highway and Transportation Officials; 2010.

D. ASTM C136 - Standard Test Method for Sieve Analysis of Fine and Coarse Aggregates; 2006.

E. ASTM D698 - Standard Test Methods for Laboratory Compaction Characteristics of Soil Using Standard Effort (12,400 ft-lbf/ft3 (600 kN-m/m3)); 2012.

F. ASTM D1556 - Standard Test Method for Density and Unit Weight of Soil in Place by the Sand-Cone Method; 2007.

G. ASTM D1557 - Standard Test Methods for Laboratory Compaction Characteristics of Soil Using Modified Effort (56,000 ft-lbf/ft3 (2,700 kN m/m3)); 2012.

H. ASTM D2167 - Standard Test Method for Density and Unit Weight of Soil in Place by the Rubber Balloon Method; 2008.

I. ASTM D2487 - Standard Practice for Classification of Soils for Engineering Purposes (Unified Soil Classification System); 2011.

J. ASTM D 2922 - Standard Test Methods for Density of Soil and Soil-Aggregate in Place by Nuclear Methods (Shallow Depth); 2005.

K. ASTM D3017 - Standard Test Method for Water Content of Soil and Rock in Place by Nuclear Methods (Shallow Depth); 2005.

L. ASTM D4318 - Standard Test Methods for Liquid Limit, Plastic Limit, and Plasticity Index of Soils; 2010.

1.04 DELIVERY, STORAGE, AND HANDLING

A. When necessary, store materials on site in advance of need.

B. When aggregate materials need to be stored on site, locate stockpiles where indicated.
   1. Separate differing materials with dividers or stockpile separately to prevent intermixing.
   2. Prevent contamination.
   3. Protect stockpiles from erosion and deterioration of materials.

C. Verify that survey bench marks and intended elevations for the Work are as indicated.

PART 2 PRODUCTS

2.01 MATERIALS

A. Provide material in accordance with the American Public Works Association New Mexico Chapter, New Mexico Standard Specifications for Public Works Construction (Latest Edition).

2.02 SOURCE QUALITY CONTROL

A. See Section 01 4000 - Quality Requirements, for general requirements for testing and analysis of aggregate materials.

B. Where aggregate materials are specified using ASTM D2487 classification, test and analyze samples for compliance before delivery to site.

C. If tests indicate materials do not meet specified requirements, change material and retest.

D. Provide materials of each type from same source throughout the Work.

PART 3 EXECUTION

3.01 EXAMINATION

A. Verify substrate has been inspected, gradients and elevations are correct, and is dry.

3.02 PREPARATION

A. Correct irregularities in substrate gradient and elevation by scarifying, reshaping, and re-compacting.

B. Do not place aggregate on soft, muddy, or frozen surfaces.

3.03 INSTALLATION

A. Place aggregate in maximum 4 inch layers and roller compact to specified density.

B. Level and contour surfaces to elevations and gradients indicated.

C. Add small quantities of fine aggregate to coarse aggregate as appropriate to assist compaction.

D. Add water to assist compaction. If excess water is apparent, remove aggregate and aerate to reduce moisture content.

E. Use mechanical tamping equipment in areas inaccessible to compaction equipment.

3.04 CLEANING

A. Remove unused stockpiled materials, leave area in a clean and neat condition. Grade stockpile area to prevent standing surface water.

B. Leave borrow areas in a clean and neat condition. Grade to prevent standing surface water.

END OF SECTION

SECTION 32 1216

ASPHALT PAVING

PART 1 GENERAL

1.01 SECTION INCLUDES

A. Aggregate base course.

B. Single course bituminous concrete paving.

C. Double course bituminous concrete paving.

D. Surface sealer.

1.02 RELATED REQUIREMENTS

A. Perform all work in accordance with the American Public Works Association New Mexico Chapter, New Mexico Standard Specifications for Public Works Construction (Latest Edition).

B. Section 31 2200 - Grading: Preparation of site for paving and base.

C. Section 31 2323 - Fill: Compacted subgrade for paving.

1.03 REFERENCE STANDARDS

A. Perform all work in accordance with the American Public Works Association New Mexico Chapter, New Mexico Standard Specifications for Public Works Construction (Latest Edition).

B. AI MS-2 - Mix Design Methods for Asphalt Concrete and Other Hot-Mix Types; The Asphalt Institute; 1997.

C. AI MS-19 - A Basic Asphalt Emulsion Manual; The Asphalt Institute; Fourth Edition.

D. ASTM D946 - Standard Specification for Penetration-Graded Asphalt Cement for Use in Pavement Construction; 2009a.

1.04 QUALITY ASSURANCE

A. Perform all work in accordance with the American Public Works Association New Mexico Chapter, New Mexico Standard Specifications for Public Works Construction (Latest Edition).

B. Mixing Plant: Provide material in accordance with the American Public Works Association New Mexico Chapter, New Mexico Standard Specifications for Public Works Construction (Latest Edition).

C. Obtain materials from same source throughout.

1.05 REGULATORY REQUIREMENTS

A. Perform all work in accordance with the American Public Works Association New Mexico Chapter, New Mexico Standard Specifications for Public Works Construction (Latest Edition).

B. Conform to applicable code for paving work on public property.

PART 2 PRODUCTS

2.01 MATERIALS

A. Aggregate for Base Course: Provide material in accordance with the American Public Works Association New Mexico Chapter, New Mexico Standard Specifications for Public Works Construction (Latest Edition)..

B. Obtain materials from quarries located within a 500 mile radius of project site.

2.02 ASPHALT PAVING MIXES AND MIX DESIGN

A. Provide material in accordance with the American Public Works Association New Mexico Chapter, New Mexico Standard Specifications for Public Works Construction (Latest Edition).

2.03 SUBMITTALS

A. Mix design

PART 3 EXECUTION

3.01 EXAMINATION

A. Verify that compacted subgrade is dry and ready to support paving and imposed loads.

B. Verify gradients and elevations of base are correct.

3.02 BASE COURSE

A. Place and compact base course.

3.03 PLACING ASPHALT PAVEMENT - SINGLE COURSE

A. Perform all work in accordance with the American Public Works Association New Mexico Chapter, New Mexico Standard Specifications for Public Works Construction (Latest Edition).

B. Place asphalt within 24 hours of applying primer or tack coat.

C. Install gutter drainage grilles and frames in correct position and elevation.

D. Compact pavement by rolling to specified density. Do not displace or extrude pavement from position. Hand compact in areas inaccessible to rolling equipment.

E. Perform rolling with consecutive passes to achieve even and smooth finish without roller marks.

3.04 PLACING ASPHALT PAVEMENT - DOUBLE COURSE

A. Place asphalt binder course within 24 hours of applying primer or tack coat.

B. Place wearing course within two hours of placing and compacting binder course.

C. Compact pavement by rolling to specified density. Do not displace or extrude pavement from position. Hand compact in areas inaccessible to rolling equipment.

D. Perform rolling with consecutive passes to achieve even and smooth finish, without roller marks.

3.05 SEAL COAT

A. Apply seal coat to surface course and asphalt curbs in accordance with AI MS-19.

3.06 TOLERANCES

A. Flatness: Maximum variation of 1/4 inch measured with 10 foot straight edge.

B. Compacted Thickness: Within 1/4 inch of specified or indicated thickness.

C. Variation from True Elevation: Within 1/2 inch.

3.07 FIELD QUALITY CONTROL

A. See Section 01 4000 - Quality Requirements, for general requirements for quality control.

B. Provide field inspection and testing. Take samples and perform tests in accordance with AI MS-2.

END OF SECTION

SECTION 32 1313

CONCRETE PAVING

PART 1 GENERAL

1.01 SECTION INCLUDES

A. Concrete sidewalks, stair steps, integral curbs, gutters, median barriers, parking areas, and roads.

1.02 RELATED REQUIREMENTS

A. Perform all work in accordance with the American Public Works Association New Mexico Chapter, New Mexico Standard Specifications for Public Works Construction (Latest Edition).

B. Section 31 2200 - Grading: Preparation of site for paving and base and preparation of subsoil at pavement perimeter for planting.

C. Section 31 2323 - Fill: Compacted subbase for paving.

D. Section 32 1123 - Aggregate Base Courses: Aggregate base course.

E. Section 32 1216 - Asphalt Paving: Asphalt wearing course.

F. Section 03 3000 – Cast in Place Concrete

1.03 REFERENCE STANDARDS

A. Perform all work in accordance with the American Public Works Association New Mexico Chapter, New Mexico Standard Specifications for Public Works Construction (Latest Edition).

B. ACI 211.1 - Standard Practice for Selecting Proportions for Normal, Heavyweight, and Mass Concrete; American Concrete Institute International; 1991 (Reapproved 2002).

C. ACI 301 - Specifications for Structural Concrete for Buildings; American Concrete Institute International; 2010.

D. ACI 304R - Guide for Measuring, Mixing, Transporting, and Placing Concrete;

American Concrete Institute International; 2000.

E. ACI 305R - Hot Weather Concreting; American Concrete Institute International; 2010.

F. ACI 306R - Cold Weather Concreting; American Concrete Institute International; 2010.

G. ASTM A185/A185M - Standard Specification for Steel Welded Wire Reinforcement, Plain, for Concrete; 2007.

H. ASTM A497/A497M - Standard Specification for Steel Welded Wire Reinforcement, Deformed, for Concrete; 2007.

I. ASTM A615/A615M - Standard Specification for Deformed and Plain Billet-Steel Bars for Concrete Reinforcement; 2012.

J. ASTM C33/C33M - Standard Specification for Concrete Aggregates; 2011a.

K. ASTM C39/C39M - Standard Test Method for Compressive Strength of Cylindrical Concrete Specimens; 2012a.

L. ASTM C94/C94M - Standard Specification for Ready-Mixed Concrete; 2012.

M. ASTM C150/C150M - Standard Specification for Portland Cement; 2012.

N. ASTM C173/C173M - Standard Test Method for Air Content of Freshly Mixed Concrete by the Volumetric Method; 2010b.

O. ASTM C260 - Standard Specification for Air-Entraining Admixtures for Concrete; 2010a.

P. ASTM C309 - Standard Specification for Liquid Membrane-Forming Compounds for Curing Concrete; 2011.

Q. ASTM C494/C494M - Standard Specification for Chemical Admixtures for Concrete; 2012.

R. ASTM C618 - Standard Specification for Coal Fly Ash and Raw or Calcined Natural Pozzolan for Use in Concrete; 2012.

S. ASTM C685/C685M - Standard Specification for Concrete Made by Volumetric Batching and Continuous Mixing; 2011.

T. ASTM D1751 - Standard Specification for Preformed Expansion Joint Filler for Concrete Paving and Structural Construction (nonextruding and Resilient Bituminous Types); 2004 (Reapproved 2008).

U. ASTM D1752 - Standard Specification for Preformed Sponge Rubber Cork and Recycled PVC Expansion Joint Fillers for Concrete Paving and Structural Construction; 2004a (Reapproved 2008).

1.04 SUBMITTALS

A. See Section 01 3000 - Administrative Requirements, for submittal procedures.

B. Design Data: Indicate pavement thickness, designed concrete strength, reinforcement, and typical details.

PART 2 PRODUCTS

2.01 PAVING ASSEMBLIES

A. Comply with applicable requirements of ACI 301.

B. Design paving for parking and residential streets.

C. Concrete Sidewalks and Median Barrier: 3,000 psi, 28 day concrete. See plans for sections.

D. Parking Area Pavement: 4,000 psi, 28 day concrete. See plans for sections.

E. Parking Pavement: See section 32 1443 Cast Institu Paving System.

2.02 FORM MATERIALS

A. Form Materials: Conform to ACI 301.

B. Joint Filler: Preformed; non-extruding bituminous type (ASTM D1751) or sponge rubber or cork (ASTM D1752).

1. Thickness: 1/2 inch.

2.03 REINFORCEMENT

A. Reinforcing Steel and Welded Wire Reinforcement: Types specified in Section 03 3000.

2.04 CONCRETE MATERIALS

A. Obtain materials from quarries located within a 500 mile radius of project site.

B. Provide for 20% fly ash replacement of cement.

2.05 ACCESSORIES

A. Acid Etch Solution: Muriatic type mixed to a five percent solution.

2.06 CONCRETE MIX DESIGN

A. Perform all work in accordance with the American Public Works Association New Mexico Chapter, New Mexico Standard Specifications for Public Works Construction (Latest Edition).

2.07 MIXING

A. On Project Site: Mix in drum type batch mixer, complying with ASTM C685/C94M. Mix each batch not less than 1-1/2 minutes and not more than 5 minutes.

B. Transit Mixers: Comply with ASTM C94/C94M.

PART 3 EXECUTION

3.01 EXAMINATION

A. Verify compacted subgrade is acceptable and ready to support paving and imposed loads.

B. Verify gradients and elevations of base are correct.

3.02 SUBBASE

A. See Section 32 1123 for construction of base course for work of this Section.

3.03 PREPARATION

A. Moisten base to minimize absorption of water from fresh concrete.

B. Coat surfaces of manhole frames with oil to prevent bond with concrete pavement.

C. Notify Architect minimum 24 hours prior to commencement of concreting operations.

3.04 FORMING

A. Place and secure forms to correct location, dimension, profile, and gradient.

B. Assemble formwork to permit easy stripping and dismantling without damaging concrete.

C. Place joint filler vertical in position, in straight lines. Secure to formwork during concrete placement.

3.05 REINFORCEMENT

A. Place reinforcement at top of slabs-on-grade.

B. Interrupt reinforcement at contraction joints.

C. Place dowels to achieve pavement and curb alignment as detailed.

3.06 COLD AND HOT WEATHER CONCRETING

A. Follow recommendations of ACI 305R when concreting during hot weather.

B. Follow recommendations of ACI 306R when concreting during cold weather.

C. Do not place concrete when base surface temperature is less than 40 degrees F, or surface is wet or frozen.

3.07 PLACING CONCRETE

A. Coordinate installation of snow melting components.

B. Place concrete in accordance with ACI 304R.

C. Do not place concrete when base surface is wet.

D. Place concrete using the slip form technique.

E. Ensure reinforcement, inserts, embedded parts, formed joints and expansion joints are not disturbed during concrete placement.

3.08 JOINTS

A. Align curb, gutter, and sidewalk joints.

B. Place 3/8 inch wide expansion joints at 20 foot intervals and to separate paving from vertical surfaces and other components and in pattern indicated.
   1. Form joints with joint filler extending from bottom of pavement to within 1/2 inch of finished surface.
   2. Secure to resist movement by wet concrete.

C. Provide scored joints:
   1. At 3 feet intervals.
   2. Between sidewalks and curbs.
   3. Between curbs and pavement.

D. Provide keyed joints as indicated.

E. Saw cut contraction joints 3/16 inch wide at an optimum time after finishing. Cut 1/3 into depth of slab.

3.09 EXPOSED AGGREGATE

A. Wash scheduled concrete surfaces with acid etch solution exposing aggregate to match sample panel.

3.10 FINISHING

A. Area Paving: Light broom, texture perpendicular to pavement direction.

B. Sidewalk Paving: Light broom, texture perpendicular to direction of travel with troweled and radiused edge 1/4 inch radius.

C. Median Barrier: Light broom, texture perpendicular to direction of travel with troweled and radiused edge 1/4 inch radius.

D. Curbs and Gutters: Light broom, texture parallel to pavement direction.

E. Inclined Vehicular Ramps: Broomed perpendicular to slope.

F. Place curing compound on exposed concrete surfaces immediately after finishing. Apply in accordance with manufacturer's instructions.

3.11 TOLERANCES

A. Maximum Variation of Surface Flatness: 1/4 inch in 10 ft.

B. Maximum Variation From True Position: 1/4 inch.

3.12 PROTECTION

A. Immediately after placement, protect pavement from premature drying, excessive hot or cold temperatures, and mechanical injury.

B. Do not permit pedestrian traffic over pavement for 7 days minimum after finishing.

END OF SECTION

SECTION 32 1723.13

PAINTED PAVEMENT MARKINGS

PART 1 GENERAL

1.01 SECTION INCLUDES

A. Parking lot markings, including parking bays, crosswalks, arrows, handicapped symbols, and curb markings.

B. Roadway lane markings and crosswalk markings.

C. "No Parking" curb painting. Fire lane curb painting.

1.02 RELATED REQUIREMENTS

A. Section 32 1216 - Asphalt Paving.

B. Section 32 1313 - Concrete Paving.

1.03 REFERENCE STANDARDS

A. Perform all work in accordance with the American Public Works Association New Mexico Chapter, New Mexico Standard Specifications for Public Works Construction (Latest Edition).

B. FS TT-B-1325 - Beads (Glass Spheres); Retro-Reflective; Rev. D, 2007.

C. FS TT-P-1952 - Paint, Traffic Black, and Airfield Marking, Waterborne; Rev. E, 2007.

D. MPI (APL) - Master Painters Institute Approved Products List; Master Painters and Decorators Association; current edition, www.paintinfo.com.

E. MPI (APSM) - Master Painters Institute Architectural Painting Specification Manual; 2004.

F. FHWA MUTCD - Manual on Uniform Traffic Control Devices for Streets and Highways; U.S. Department of Transportation, Federal Highway Administration; http://mutcd.fhwa.dot.gov; current edition.

1.04 DELIVERY, STORAGE, AND HANDLING

A. Deliver paint in containers of at least 5 gallons accompanied by batch certificate.

B. Store products in manufacturer's unopened packaging until ready for installation.

C. Store and dispose of solvent-based materials, and materials used with solvent-based materials, in accordance with requirements of local authorities having jurisdiction.

PART 2 PRODUCTS

2.01 MATERIALS

A. Line and Zone Marking Paint: MPI No. 97 Latex Traffic Marking Paint; color(s) as indicated.

1. Roadway Markings: As required by authorities having jurisdiction.
2. Parking Lots: Yellow.
3. Handicapped Symbols: Blue.
4. Fire lane curb as required by Rio Rancho Fire Mashall.

B. Temporary Marking Tape: Preformed, reflective, pressure sensitive adhesive tape in color(s) required; Contractor is responsible for selection of material of sufficient durability as to perform satisfactorily during period for which its use is required.

PART 3 EXECUTION

3.01 EXAMINATION

A. Do not begin installation until substrates have been properly prepared.

B. If substrate preparation is the responsibility of another installer, notify Architect of unsatisfactory preparation before proceeding.

3.02 PREPARATION

A. Allow new pavement surfaces to cure for a period of not less than 14 days before application of marking materials.

B. Prepare surfaces using the methods recommended by the manufacturer for achieving the best result for the substrate under the project conditions.

C. Clean surfaces thoroughly prior to installation.
   1. Remove dust, dirt, and other granular surface deposits by sweeping, blowing with compressed air, rinsing with water, or a combination of these methods.

D. Where oil or grease are present, scrub affected areas with several applications of trisodium phosphate solution or other approved detergent or degreaser, and rinse thoroughly after each application; after cleaning, seal oil-soaked areas with cut shellac to prevent bleeding through the new paint.

E. Establish survey control points to determine locations and dimensions of markings; provide templates to control paint application by type and color at necessary intervals.

F. Temporary Pavement Markings: When required or directed by Architect, apply temporary markings of the color(s), width(s) and length(s) as indicated or directed.
   1. After temporary marking has served its purpose, remove temporary marking by carefully controlled sandblasting, approved grinding equipment, or other approved method so that surface to which the marking was applied will not be damaged.
   2. At Contractor's option, temporary marking tape may used in lieu of temporary painted marking; remove unsatisfactory tape and replace with painted markings at no additional cost to Owner.

3.03 INSTALLATION

A. Begin pavement marking as soon as practicable after surface has been cleaned and dried.

B. Do not apply paint if temperature of surface to be painted or the atmosphere is less than 50 degrees F or more than 95 degrees F.

C. Apply in accordance with manufacturer's instructions using an experienced technician that is thoroughly familiar with equipment, materials, and marking layouts.

D. Comply with FHWA MUTCD manual (http://mutcd.fhwa.dot.gov) for details not shown.

E. Apply markings in locations determined by measurement from survey control points; preserve control points until after markings have been accepted.

F. Apply uniformly painted markings of color(s), lengths, and widths as indicated on the drawings true, sharp edges and ends.
   1. Apply paint in one coat only.
   2. Wet Film Thickness: 0.015 inch, minimum.
   3. Width Tolerance: Plus or minus 1/8 inch.

G. Roadway Traffic Lanes: Use suitable mobile mechanical equipment that provides constant agitation of paint and travels at controlled speeds.
   1. Conduct operations in such a manner that necessary traffic can move without hindrance.
   2. Place warning signs at the beginning of the wet line, and at points well in advance of the marking equipment for alerting approaching traffic from both directions. Place small flags or other similarly effective small objects near freshly applied markings at frequent intervals to reduce crossing by traffic.
   3. If paint does not dry within expected time, discontinue paint operations until cause of slow drying is determined and corrected.
   4. Skip Markings: Synchronize one or more paint "guns" to automatically begin and cut off paint flow; make length of intervals as indicated.
   5. Use hand application by pneumatic spray for application of paint in areas where a mobile paint applicator cannot be used.

H. Parking Lots: Apply parking space lines, entrance and exit arrows, painted curbs, and other markings indicated on drawings.
   1. Mark the International Handicapped Symbol at indicated parking spaces.
   2. Hand application by pneumatic spray is acceptable.

I. Symbols: Use a suitable template that will provide a pavement marking with true, sharp edges and ends, of the design and size indicated.

END OF SECTION

SECTION 33 1116

SITE WATER UTILITY DISTRIBUTION PIPING

PART 1 GENERAL

1.01 SECTION INCLUDES

A. Pipe and fittings for site water lines including domestic water lines and fire water lines.

B. Valves, Fire hydrants, and Domestic water hydrants.

1.02 RELATED REQUIREMENTS

A. Perform all work in accordance with the American Public Works Association New Mexico Chapter, New Mexico Standard Specifications for Public Works Construction (Latest Edition).

B. Section 03 3000 - Cast-in-Place Concrete: Concrete for thrust restraints.

C. Section 31 2316 - Excavation: Excavating of trenches.

D. Section 31 2323 - Fill: Bedding and backfilling.

E. Section 31 2316.13 - Trenching: Excavating, bedding, and backfilling.

F. Section 33 0513 - Manholes and Structures.

G. Section 03 3000 - Cast-in-Place Concrete: Concrete for thrust restraints.

H. Section 09 9000 - Painting and Coating.

1.03 REFERENCES

A. Perform all work in accordance with the American Public Works Association New Mexico Chapter, New Mexico Standard Specifications for Public Works Construction (Latest Edition).

B. ASME B16.18 - Cast Copper Alloy Solder Joint Pressure Fittings; The American Society of Mechanical Engineers; 2012 (ANSI B16.18).

C. ASME B16.22 - Wrought Copper and Copper Alloy Solder-Joint Pressure Fittings; The American Society of Mechanical Engineers; 2001 (R2010).

D. ASTM B88 - Standard Specification for Seamless Copper Water Tube; 2009.

E. ASTM D1785 - Standard Specification for Poly(Vinyl Chloride) (PVC) Plastic Pipe, Schedules 40, 80, and 120; 2012.

F. ASTM D2241 - Standard Specification for Poly (Vinyl Chloride) (PVC) Pressure-Rated Pipe (SDR Series); 2009.

G. ASTM D2466 - Standard Specification for Poly(Vinyl Chloride) (PVC) Plastic Pipe Fittings, Schedule 40; 2006.

H. ASTM D2855 - Standard Practice for Making Solvent-Cemented Joints with Poly(Vinyl Chloride) (PVC) Pipe and Fittings; 1996 (Reapproved 2010).

I. ASTM D3035 - Standard Specification for Polyethylene (PE) Plastic Pipe (DR-PR) Based on Controlled Outside Diameter; 2012.

J. ASTM D3139 - Standard Specification for Joints for Plastic Pressure Pipes using Flexible Elastomeric Seals; 1998 (Reapproved 2011).

K. AWS A5.8/A5.8M - Specification for Filler Metals for Brazing and Braze Welding; American Welding Society; 2011 and errata.

L. AWWA C104/A21.4 - Cement-Mortar Lining for Ductile-Iron Pipe and Fittings for Water; American Water Works Association; 2008 (ANSI/AWWA C104/A21.4).

M. AWWA C105/A21.5 - Polyethylene Encasement for Ductile-Iron Pipe Systems; American Water Works Association; 2010 (ANSI/AWWA C105/A21.5).

N. AWWA C111/A21.11 - Rubber-Gasket Joints for Ductile-Iron Pressure Pipe and Fittings; American Water Works Association; 2007 (ANSI/AWWA C111/A21.11).

O. AWWA C151/A21.51 - Ductile-Iron Pipe, Centrifugally Cast, for Water; American Water Works Association; 2009 (ANSI/AWWA C151/A21.51).

P. AWWA C500 - Metal-Seated Gate Valves for Water Supply Service; American Water Works Association; 2009.

Q. AWWA C502 - Dry Barrel Fire Hydrants; American Water Works Association; 2005 (ANSI/AWWA C502/C502a).

R. AWWA C504 - Rubber Seated Butterfly Valves; American Water Works Association; 2010.

S. AWWA C508 - Swing-Check Valves for Waterworks Service, 2 In. (50 mm) Through 24 In. (600 mm) NPS; American Water Works Association; 2011 (ANSI/AWWA C508).

T. AWWA C509 - Resilient-Seated Gate Valves for Water Supply Service; American Water Works Association; 2009 (ANSI/AWWA C509).

U. AWWA C600 - Installation of Ductile-Iron Water Mains and Their Appurtenances; American Water Works Association; 2010 (ANSI/AWWA C600).

V. AWWA C606 - Grooved and Shouldered Joints; American Water Works Association; 2011.

W. AWWA C900 - Polyvinyl Chloride (PVC) Pressure Pipe, 4 In. Through 12 In. (100 mm Through 300 mm), for Water Distribution; American Water Works Association; 2008 (ANSI/AWWA C900/C900a).

X. AWWA C901 - Polyethylene (PE) Pressure Pipe and Tubing, 1/2 In. (13 mm) Through 3 In. (76 mm), for Water Service; American Water Works Association; 2008.

Y. UL 246 - Hydrants for Fire-Protection Service; Underwriters Laboratories Inc.; Current Edition, Including All Revisions.

1.04 SUBMITTALS

A. See Section 01 3000 - Administrative Requirements, for submittal procedures.

1.05 QUALITY ASSURANCE

A. Perform all work in accordance with the American Public Works Association New Mexico Chapter, New Mexico Standard Specifications for Public Works Construction (Latest Edition).

1.06 DELIVERY, STORAGE, AND HANDLING

A. Deliver and store valves in shipping containers with labeling in place.

PART 2 PRODUCTS

2.01 WATER PIPE

A. Provide material in accordance with the American Public Works Association New Mexico Chapter, New Mexico Standard Specifications for Public Works Construction (Latest Edition).

2.02 VALVES

A. Provide valves in accordance with the American Public Works Association New Mexico Chapter, New Mexico Standard Specifications for Public Works Construction (Latest Edition).

B. Valves: Manufacturer's name and pressure rating marked on valve body.

2.03 HYDRANTS

A. Provide hydrants in accordance with the American Public Works Association New Mexico Chapter, New Mexico Standard Specifications for Public Works Construction (Latest Edition).

B. Hydrants: AWWA C502, UL 246, dry barrel type.

PART 3 EXECUTION

3.01 EXAMINATION

A. Verify that building service connection and municipal utility water main size, location, and invert are as indicated.

3.02 PREPARATION

A. Cut pipe ends square, ream pipe and tube ends to full pipe diameter, remove burrs.

B. Remove scale and dirt on inside and outside before assembly.

C. Prepare pipe connections to equipment with flanges or unions.

3.03 TRENCHING

A. See the sections on excavation and fill for additional requirements.

B. See Section 31 2316.13 for additional requirements.

C. Backfill around sides and to top of pipe with cover fill, tamp in place and compact, then complete backfilling.

3.04 INSTALLATION - PIPE

A. Route pipe in straight line.

B. Install pipe to allow for expansion and contraction without stressing pipe or joints.

C. Slope water pipe and position drains at low points.

3.05 INSTALLATION - VALVES AND HYDRANTS

A. Set valves on solid bearing.

B. Center and plumb valve box over valve. Set box cover flush with finished grade.

C. Set hydrants plumb; locate pumper nozzle perpendicular to and facing roadway.

D. Set hydrants to grade, with nozzles at least 20 inches above ground.

E. Locate control valve 4 inches away from hydrant.

F. Provide a drainage pit 36 inches square by 24 inches deep filled with 2 inches washed gravel. Encase elbow of hydrant in gravel to 6 inches above drain opening. Do not connect drain opening to sewer.

G. Paint hydrants in accordance with Section 09 9000.

3.06 SERVICE CONNECTIONS

A. Provide water service to utility company requirements with reduced pressure backflow preventer and water meter with by-pass valves and sand strainer.

B. Provide sleeve in retaining wall for service main. Support with reinforced concrete bridge. Calk enlarged sleeve watertight.

C. Anchor service main to interior surface of foundation wall.

D. Provide 18 gage galvanized sheet metal sleeve surrounding service main to 6 inches above floor and 6 feet minimum below grade. Size for 2 inches minimum of glass fiber insulation stuffing.

END OF SECTION

SECTION 33 1300

DISINFECTING OF WATER UTILITY DISTRIBUTION

PART 1 GENERAL

1.01 SECTION INCLUDES

A. Disinfection of site domestic water lines and site fire water lines specified in Section 33 1116.

B. Disinfection of building domestic water piping specified in Section 22 1005.

C. Disinfection of water storage tanks.

D. Testing and reporting results.

1.02 RELATED REQUIREMENTS

A. Perform all work in accordance with the American Public Works Association New Mexico Chapter, New Mexico Standard Specifications for Public Works Construction (Latest Edition).

B. Section 33 1116 - Site Water Utility Distribution Piping.

1.03 PRICE AND PAYMENT PROCEDURES

A. See Section 01 2200 - Unit Prices, for additional unit price requirements.

B. Disinfection: By the linear foot. Includes preparing, disinfecting, testing, and reporting.

1.04 REFERENCE STANDARDS

A. Perform all work in accordance with the American Public Works Association New Mexico Chapter, New Mexico Standard Specifications for Public Works Construction (Latest Edition).

B. AWWA B300 - Hypochlorites; American Water Works Association; 2011 (ANSI/AWWA B300).

C. AWWA B301 - Liquid Chlorine; American Water Works Association; 2010

(ANSI/AWWA B301).

D. AWWA B302 - Ammonium Sulfate; American Water Works Association; 2010 (ANSI/AWWA B302).

E. AWWA B303 - Sodium Chlorite; American Water Works Association; 2010.

F. AWWA C651 - Disinfecting Water Mains; American Water Works Association; 2005 (ANSI/AWWA C651).

1.05 SUBMITTALS

A. See Section 01 3000 - Administrative Requirements, for submittal procedures.

B. Test Reports: Indicate results comparative to specified requirements.

C. Disinfection report:

1. Type and form of disinfectant used.
2. Date and time of disinfectant injection start and time of completion.
3. Test locations.
4. Initial and 24 hour disinfectant residuals (quantity in treated water) in ppm for each outlet tested.
5. Date and time of flushing start and completion.
6. Disinfectant residual after flushing in ppm for each outlet tested.

D. Bacteriological report:

1. Date issued, project name, and testing laboratory name, address, and telephone number.
2. Time and date of water sample collection.
3. Name of person collecting samples.
4. Test locations.
5. Initial and 24 hour disinfectant residuals in ppm for each outlet tested.
6. Coliform bacteria test results for each outlet tested.
7. Certification that water conforms, or fails to conform, to bacterial standards of the American Public Works Association New Mexico Chapter, New Mexico Standard Specifications for Public Works Construction (Latest Edition).

PART 3 EXECUTION

2.01 DISINFECTION

A. Use method prescribed by the applicable state or local codes, or health authority or water purveyor having jurisdiction, or in the absence of any of these follow AWWA C651.

B. Provide and attach equipment required to perform the work.

C. Inject treatment disinfectant into piping system.

D. Maintain disinfectant in system for 24 hours.

E. Flush, circulate, and clean until required cleanliness is achieved; use municipal domestic water.

F. Replace permanent system devices removed for disinfection.

END OF SECTION

SECTION 33 3111

SITE SANITARY UTILITY SEWERAGE PIPING

PART 1 GENERAL

1.01 SECTION INCLUDES

A. Sanitary sewerage drainage piping, fittings, and accessories.

B. Connection of building sanitary drainage system to municipal sewers.

C. Cleanout Access.

1.02 RELATED REQUIREMENTS

A. Perform all work in accordance with the American Public Works Association New Mexico Chapter, New Mexico Standard Specifications for Public Works Construction (Latest Edition).

B. Section 03 3000 - Cast-in-Place Concrete: Concrete for cleanout base pad construction.

C. Section 31 2316 - Excavation: Excavating of trenches.

D. Section 31 2316.13 - Trenching: Excavating, bedding, and backfilling.

E. Section 31 2323 - Fill: Bedding and backfilling.

F. Section 31 2316.13 - Trenching: Excavating, bedding, and backfilling.

G. Section 33 0513 - Manholes and Structures.

H. Section 03 3000 - Cast-in-Place Concrete: Concrete for cleanout base pad construction.

1.03 REFERENCE STANDARDS

A. Perform all work in accordance with the American Public Works Association New Mexico Chapter, New Mexico Standard Specifications for Public Works Construction (Latest Edition).

B. ASTM A74 - Standard Specification for Cast Iron Soil Pipe and Fittings; 2009.

C. ASTM A746 - Standard Specification for Ductile Iron Gravity Sewer Pipe; 2009.

D. ASTM C12 - Standard Practice for Installing Vitrified Clay Pipe Lines; 2009.

E. ASTM C14 - Standard Specification for Nonreinforced Concrete Sewer, Storm Drain, and Culvert Pipe; 2011.

F. ASTM C14M - Standard Specification for Nonreinforced Concrete Sewer, Storm Drain, and Culvert Pipe [Metric]; 2011.

G. ASTM C76 - Standard Specification for Reinforced Concrete Culvert, Storm Drain, and Sewer Pipe; 2012a.

H. ASTM C76M - Standard Specification for Reinforced Concrete Culvert, Storm Drain, and Sewer Pipe (Metric); 2012a.

I. ASTM C425 - Standard Specification for Compression Joints for Vitrified Clay Pipe and Fittings; 2004 (Reapproved 2009).

J. ASTM C443 - Standard Specification for Joints for Concrete Pipe and Manholes, Using Rubber Gaskets; 2012.

K. ASTM C443M - Standard Specification for Joints for Concrete Pipe and Manholes, Using Rubber Gaskets (Metric); 2011.

L. ASTM C564 - Standard Specification for Rubber Gaskets for Cast Iron Soil Pipe and Fittings; 2011.

M. ASTM C700 - Standard Specification for Vitrified Clay Pipe, Extra Strength, Standard Strength, and Perforated; 2011.

N. ASTM D1785 - Standard Specification for Poly(Vinyl Chloride) (PVC) Plastic Pipe, Schedules 40, 80, and 120; 2012.

O. ASTM D2321 - Standard Practice for Underground Installation of Thermoplastic Pipe for Sewers and Other Gravity-Flow Applications; 2011.

P. ASTM D2729 - Standard Specification for Poly(Vinyl Chloride) (PVC) Sewer Pipe and Fittings; 2011.

Q. ASTM D2751 - Standard Specification for Acrylonitrile-Butadiene-Styrene (ABS)

Sewer Pipe and Fittings; 2005.

R. ASTM D3034 - Standard Specification for Type PSM Poly(Vinyl Chloride) (PVC) Sewer Pipe and Fittings; 2008.

S. AWWA C111/A21.11 - American National Standard for Rubber Gasket Joints For Cast Iron and Ductile Iron Pressure Pipe and Fittings; 2007. (ANSI/AWWA C111/A21.11)

1.04 DEFINITIONS

A. Bedding: Fill placed under, beside and directly over pipe, prior to subsequent backfill operations.

1.05 REGULATORY REQUIREMENTS

A. Perform all work in accordance with the American Public Works Association New Mexico Chapter, New Mexico Standard Specifications for Public Works Construction (Latest Edition).

1.06 PROJECT CONDITIONS

A. Coordinate the Work with termination of sanitary sewer connection outside building, connection to municipal sewer utility service, and trenching.

PART 2 PRODUCTS

2.01 SEWER PIPE MATERIALS

A. Provide material in accordance with the American Public Works Association New Mexico Chapter, New Mexico Standard Specifications for Public Works Construction (Latest Edition).

B. Fittings: Same material as pipe molded or formed to suit pipe size and end design, in required tee, bends, elbows, cleanouts, reducers, traps and other configurations required.

2.02 PIPE ACCESSORIES

A. Trace Wire: Magnetic detectable conductor, clear plastic covering, imprinted with "Sewer Service " in large letters.

2.03 BEDDING AND COVER MATERIALS

A. Pipe Bedding Material: As specified in Section 31 2316.13.

B. Pipe Cover Material: As specified in Section 31 2316.13.

PART 3 EXECUTION

3.01 GENERAL

A. Perform work in accordance with applicable code(s).

3.02 TRENCHING

A. See Section 31 2316.13 for additional requirements.

B. Backfill around sides and to top of pipe with cover fill, tamp in place and compact, then complete backfilling.

3.03 INSTALLATION - PIPE

A. Lay pipe to slope gradients noted on layout drawings; with maximum variation from true slope of 1/8 inch in 10 feet.

B. Connect to building sanitary sewer outlet, through installed sleeves.

C. Install trace wire 6 inches above top of pipe; coordinate with Section 31 2316.13.

END OF SECTION

SECTION 33 4111

SITE STORM UTILITY DRAINAGE PIPING

PART 1 GENERAL

1.01 SECTION INCLUDES

A. Storm drainage piping, fittings, and accessories.

B. Connection of drainage system to municipal sewers.

C. Catch basins, Plant area drains, Paved area drainage, Site surface drainage, Detention tank, and Detention basin.

1.02 RELATED REQUIREMENTS

A. Perform all work in accordance with the American Public Works Association New Mexico Chapter, New Mexico Standard Specifications for Public Works Construction (Latest Edition).

B. Section 03 3000 - Cast-in-Place Concrete: Concrete for cleanout base pad construction.

C. Section 31 2316 - Excavation: Excavating of trenches.

D. Section 31 2316.13 - Trenching: Excavating, bedding, and backfilling.

E. Section 31 2323 - Fill: Bedding and backfilling.

F. Section 31 2316.13 - Trenching: Excavating, bedding, and backfilling.

G. Section 33 0513 - Manholes and Structures.

H. Section 03 3000 - Cast-in-Place Concrete: Concrete for cleanout base pad construction.

1.03 QUALITY ASSURANCE:

A. Pre-installation Meeting: Conduct a pre-installation meeting as coordinated with Architect before starting work of this section; require attendance by all affected installers.

1.04 REFERENCE STANDARDS

A. Perform all work in accordance with the American Public Works Association New Mexico Chapter, New Mexico Standard Specifications for Public Works Construction (Latest Edition).

B. AASHTO M 36 - Standard Specification for Corrugated Steel Pipe, Metallic-Coated, for Sewers and Drains; American Association of State Highway and Transportation Officials; 2003.

C. ASTM A74 - Standard Specification for Cast Iron Soil Pipe and Fittings; 2009.

D. ASTM C12 - Standard Practice for Installing Vitrified Clay Pipe Lines; 2009.

E. ASTM C14 - Standard Specification for Nonreinforced Concrete Sewer, Storm Drain, and Culvert Pipe; 2011.

F. ASTM C14M - Standard Specification for Nonreinforced Concrete Sewer, Storm Drain, and Culvert Pipe [Metric]; 2011.

G. ASTM C76 - Standard Specification for Reinforced Concrete Culvert, Storm Drain, and Sewer Pipe; 2012a.

H. ASTM C76M - Standard Specification for Reinforced Concrete Culvert, Storm Drain, and Sewer Pipe [Metric]; 2012a.

I. ASTM C425 - Standard Specification for Compression Joints for Vitrified Clay Pipe and Fittings; 2004 (Reapproved 2009).

J. ASTM C443 - Standard Specification for Joints for Concrete Pipe and Manholes, Using Rubber Gaskets; 2012.

K. ASTM C443M - Standard Specification for Joints for Concrete Pipe and Manholes, Using Rubber Gaskets (Metric); 2011.

L. ASTM C564 - Standard Specification for Rubber Gaskets for Cast Iron Soil Pipe and Fittings; 2011.

M. ASTM C700 - Standard Specification for Vitrified Clay Pipe, Extra Strength, Standard Strength, and Perforated; 2011.

N. ASTM D1785 - Standard Specification for Poly(Vinyl Chloride) (PVC) Plastic Pipe, Schedules 40, 80, and 120; 2012.

O. ASTM D2321 - Standard Practice for Underground Installation of Thermoplastic Pipe for Sewers and Other Gravity-Flow Applications; 2011.

P. ASTM D2729 - Standard Specification for Poly(Vinyl Chloride) (PVC) Sewer Pipe and Fittings; 2011.

Q. ASTM D2751 - Standard Specification for Acrylonitrile-Butadiene-Styrene (ABS) Sewer Pipe and Fittings; 2005.

R. ASTM D3034 - Standard Specification for Type PSM Poly(Vinyl Chloride) (PVC) Sewer Pipe and Fittings; 2008.

1.05 DEFINITIONS

A. Bedding: Fill placed under, beside and directly over pipe, prior to subsequent backfill operations.

1.06 SUBMITTALS

A. See Section 01 3000 - Administrative Requirements, for submittal procedures.

1.07 REGULATORY REQUIREMENTS

A. Perform all work in accordance with the American Public Works Association New Mexico Chapter, New Mexico Standard Specifications for Public Works Construction (Latest Edition).

B. Conform to applicable code for materials and installation of the Work of this section.

1.08 PROJECT CONDITIONS

A. Coordinate the Work with termination of storm sewer connection outside building, trenching, connection to foundation drainage system.

PART 2 PRODUCTS

2.01 SEWER PIPE MATERIALS

A. Provide material in accordance with the American Public Works Association New

Mexico Chapter, New Mexico Standard Specifications for Public Works Construction (Latest Edition).

2.02 PIPE ACCESSORIES

A. Provide all fittings, joints, and other required appurtenances in accordance with the American Public Works Association New Mexico Chapter, New Mexico Standard Specifications for Public Works Construction (Latest Edition).

B. Trace Wire: Magnetic detectable conductor, clear plastic covering, imprinted with "Storm Sewer Service " in large letters.

2.03 CATCH BASIN, TRENCH DRAIN, CLEANOUT, AND AREA DRAIN COMPONENTS

A. Provide in accordance with the American Public Works Association New Mexico Chapter, New Mexico Standard Specifications for Public Works Construction (Latest Edition).

2.04 BEDDING AND COVER MATERIALS

A. Bedding: As specified in Section 31 2316.13.

B. Cover: As specified in Section 31 2316.13.

PART 3 EXECUTION

3.01 TRENCHING

A. See Section 31 2316.13 for additional requirements.

B. Backfill around sides and to top of pipe with cover fill, tamp in place and compact, then complete backfilling.

3.02 INSTALLATION - PIPE

A. Lay pipe to slope gradients noted on layout drawings; with maximum variation from true slope of 1/8 inch in 10 feet.

B. Connect to building storm drainage system, foundation drainage system, and utility/municipal sewer system.

C. Install continuous trace wire 6 inches above top of pipe; coordinate with Section 31 2316.13.

3.03 INSTALLATION - CATCH BASINS, TRENCH DRAINS AND CLEANOUTS

A. Form bottom of excavation clean and smooth to correct elevation.

B. Form and place cast-in-place concrete base pad, with provision for sanitary sewer pipe end sections.

C. Establish elevations and pipe inverts for inlets and outlets as indicated.

D. Mount lid and frame level in grout, secured to top cone section to elevation indicated.

END OF SECTION

GEO-TEST

GEOTECHNICAL ENGINEERING SERVICES REPORT NO. 1-90208

RIO RANCHO SENIOR CENTER PHASE 1

RIO RANCHO, NEW MEXICO

GEO-TEST, INC.
3204 RICHARDS LANE
SANTA FE,
NEW MEXICO
87507
(505) 471-1101
FAX (505) 471-2245

8528 CALLE ALAMEDA NE
ALBUQUERQUE,
NEW MEXICO
87113
(505) 857-0933
FAX (505) 857-0803

2805-A LAS VEGAS CT.
LAS CRUCES,
NEW MEXICO
88007
(575) 526-6260
FAX (575) 523-1660

PREPARED FOR:

G. DON DUDLEY ARCHITECT, LTD.

GEO-TEST

April 11, 2019
Job No. 1-90208

G. Don Dudley Architect, Ltd.
400 Gold Ave. SW
Albuquerque, NM 87102

ATTN: Don Dudley

RE: Geotechnical Engineering Services Report
Rio Rancho Senior Center – Phase 1
Rio Rancho, New Mexico

Dear Mr. Dudley:

Submitted herein is the Geotechnical Engineering Services Report for the above referenced project. The report contains the results of our field investigation, laboratory testing, and recommendations for foundation design, slab support, retaining structures and paving as well as criteria for site grading.

It has been a pleasure to serve you on this project. If you should have any questions, please contact this office.

Respectfully submitted:
GEO-TEST, INC.

Patrick R. Whorton, E.I.

Reviewed by:

Robert D Booth, P.E.

ROBERT D. BOOTH
NEW MEXICO
5711
LICENSED PROFESSIONAL ENGINEER

GEO-TEST, INC.
3204 RICHARDS LANE
SANTA FE,
NEW MEXICO
87507
(505) 471-1101
FAX (505) 471-2245

8528 CALLE ALAMEDA NE
ALBUQUERQUE,
NEW MEXICO
87113
(505) 857-0933
FAX (505) 857-0803

2805-A LAS VEGAS CT.
LAS CRUCES,
NEW MEXICO
88007
(575) 526-6260
FAX (575) 523-1660

GEO-TEST

Table of Contents

INTRODUCTION 4
PROPOSED CONSTRUCTION 4
FIELD EXPLORATION 4
LABORATORY TESTING 5
SURFACE CONDITIONS 5
SUBSURFACE SOIL CONDITIONS 5
SITE SEISMICITY 5
CONCLUSIONS AND RECOMMENDATIONS 6
FOUNDATIONS 7
SLABS ON GRADE 7
RETAINING WALLS 8
PAVEMENT SECTION DESIGN 9
SITE GRADING 10
EXCAVATIONS 11
MOISTURE PROTECTION 11
FOUNDATION REVIEW AND INSPECTION 12
CLOSURE 13
BORING LOCATION MAP 14
BORING LOGS 15
SUMMARY OF LABORATORY RESULTS 25
GRAIN SIZE DISTRIBUTION 27

GEO-TEST, INC.
3204 RICHARDS LANE
SANTA FE,
NEW MEXICO
87507
(505) 471-1101
FAX (505) 471-2245

8528 CALLE ALAMEDA NE
ALBUQUERQUE,
NEW MEXICO
87113
(505) 857-0933
FAX (505) 857-0803

2805-A LAS VEGAS CT.
LAS CRUCES,
NEW MEXICO
88007
(575) 526-6260
FAX (575) 523-1660

GEO-TEST

GEO-TEST, INC.
3204 RICHARDS LANE
SANTA FE,
NEW MEXICO
87507
(505) 471-1101
FAX (505) 471-2245

8528 CALLE ALAMEDA NE
ALBUQUERQUE,
NEW MEXICO
87113
(505) 857-0933
FAX (505) 857-0803

2805-A LAS VEGAS CT.
LAS CRUCES,
NEW MEXICO
88007
(575) 526-6260
FAX (575) 523-1660

INTRODUCTION

This report presents the results of our geotechnical engineering services investigation performed by this firm for the proposed new Rio Rancho Senior Center to be constructed on a vacant lot located on Broadmoor Blvd. north of the UNM Sandoval Regional Medical center within the City Center of Rio Rancho, New Mexico.

The objectives of this investigation were to:

1) Evaluate the nature and engineering properties of the subsurface soils underlying the site.

2) Provide recommendations for foundation, slab on grade, retaining structures and pavement design as well as criteria for excavation, fill general site grading and seismic design.

The investigation includes subsurface exploration, selected soil sampling, laboratory testing of the samples, performing an engineering analysis and preparation of this report.

PROPOSED CONSTRUCTION

It is understood that the project consists of the construction of a new senior center in the City Center area of Rio Rancho. The Phase 1 Senior Center will be a single-story steel framed structure with no basement and a footprint of approximately 7,500 square feet with maximum column and wall loads of 40 kips and 3 kips per lineal foot respectively. The project will include associated asphalt parking and drive areas. It is also understood that there is approximately 10 feet of elevation change across the site such that cut/fill earthwork operations will be required and that site walls retaining up to 10 feet of soil may be constructed.

Should structural loads or other project details vary significantly from those outlined above, this firm should be notified for review and possible revision of the recommendations contained herein.

FIELD EXPLORATION

Ten (10) exploratory borings were drilled at the site. Four (4) borings were drilled to a depth of about 20 feet below existing grade within the proposed building footprint. Six (6) borings were drilled to depths of between 5 to 15 feet below existing grade within the proposed pavement areas. Locations of the borings are shown on the attached Boring Location Map, Figure 1. The soils encountered in the borings were continuously examined, visually classified and logged during the drilling operation. The boring logs are presented in a following section of this report. Drilling was accomplished using a truck mounted drill rig equipped with 5.5-inch diameter continuous flight hollow stem auger. Subsurface soils within the building footprint were sampled at five foot

Copyright© 2019, GEO-TEST, INC.

GEO-TEST

GEO-TEST, INC.
3204 RICHARDS LANE
SANTA FE,
NEW MEXICO
87507
(505) 471-1101
FAX (505) 471-2245

8528 CALLE ALAMEDA NE
ALBUQUERQUE,
NEW MEXICO
87113
(505) 857-0933
FAX (505) 857-0803

2805-A LAS VEGAS CT.
LAS CRUCES,
NEW MEXICO
88007
(575) 526-6260
FAX (575) 523-1660

intervals or less utilizing an open tube split barrel sampler driven by a standard penetration test hammer. Samples of auger cuttings were collected from the parking lot borings.

LABORATORY TESTING

Selected samples were tested in the laboratory to determine certain engineering properties of the soils. Moisture contents were determined to evaluate the various soil deposits with depth. The results of these tests are shown on the boring logs.

Sieve analysis and Atterberg limits tests were performed to aid in soil classification. The results of these tests are presented in the Summary of Laboratory Results and on the individual test reports presented in a following section of this report.

SURFACE CONDITIONS

The site is located north of the UNM Sandoval Regional Medical Center. The site slopes downward from the north side of the site at an elevation of approximately 5565 feet above sea level to an elevation of 5550 feet on the south side of the site. The site generally slopes gradually with no abrupt elevation changes. The site is undeveloped and populated by native shrubs and grasses.

SUBSURFACE SOIL CONDITIONS

As indicated by the exploratory borings, the soils underlying the site consist of a surficial layer of loose to medium dense non-plastic silty sand which extends to depths ranging from 6 to 14 feet below existing grades. Below the surficial silty sand layer, very dense non-plastic poorly graded sand with silt was encountered and extended to the full depths explored. Relatively thin lenses (less than 2 feet in thickness) of medium plasticity clayey sand were encountered in the surface stratum at several of the boring locations.

No free groundwater was encountered in the borings and soil moisture contents were relatively low throughout the extent of the borings.

SITE SEISMICITY

Based on the results of this investigation, Site Class D is appropriate for structural design in accordance with IBC 2015. As previously discussed, the soil profile encountered consists of loose to medium dense soil in the upper 10 and very dense sand to the full depth explored. It is likely that the deeper very dense sand could justify a Site Class C, however, a 100 foot soil profile would be required to verify per IBC 2015. As borings advanced during this investigation were only taken to a depth of about 20 feet, additional testing would be required to justify a Class C. It is recommended that the project structural engineer be consulted and if a Class C would be desirable, shear

Copyright© 2019, GEO-TEST, INC.

GEO-TEST

wave velocity profile of the site should be conducted. It should be noted that while it appears possible that a Class C could be verified via a shear wave velocity profile, it is not guaranteed.

The following design data is based on a Site Class D classification and data provided through the U.S. Geological Survey in accordance with IBC 2015.

Mapped Spectral Acceleration, S_S	0.487 g
Mapped Spectral Acceleration, S_1	0.146 g
Maximum Spectral Acceleration, S_{MS}	0.687 g
Maximum Spectral Acceleration, S_{M1}	0.324 g
Design Spectral Acceleration, S_{DS}	0.458 g
Design Spectral Acceleration, S_{D1}	0.216 g
Site Coefficient, F_A	1.410
Site Coefficient, F_v	2.215
Seismic Design Category	**D**

CONCLUSIONS AND RECOMMENDATIONS

Soils encountered in the upper 10 feet were found to be loose and dry in their present condition and are not considered suitable to provide reliable support of the proposed structure bearing on shallow spread-type footings. Footings bearing on these soils would be susceptible to excessive differential settlements, particularly upon significant moisture increases and if the building partially bears on fill. However, with site preparation and very careful moisture protection, as recommended in a following section of this report, the proposed structure can be supported on shallow spread-type footings bearing directly on properly compacted structural fill.

The site preparation would involve overexcavation of the existing soils throughout the building area to such an extent as to provide for at least 2.0 feet of properly compacted, non-expansive structural fill below all foundations and floor slabs. The limits of the overexcavation should also extend laterally from the footing perimeters a distance equal to the depth of fill beneath their bases. The exposed native soils at the base of the excavation should be densified prior to placement of structural fill. The overexcavated soils may be blended and used as structural fill provided the structural fill requirements outlined in the Site Grading section of this report are met. Detailed recommendations for foundation design and the required site grading are presented in the following sections of this report.

Moisture protection of the foundation supporting soils is considered essential for the satisfactory performance of the structures. This should be reflected in the overall site grading and drainage details as presented in a following section of this report.

GEO-TEST, INC.
3204 RICHARDS LANE
SANTA FE,
NEW MEXICO
87507
(505) 471-1101
FAX (505) 471-2245

8528 CALLE ALAMEDA NE
ALBUQUERQUE,
NEW MEXICO
87113
(505) 857-0933
FAX (505) 857-0803

2805-A LAS VEGAS CT.
LAS CRUCES,
NEW MEXICO
88007
(575) 526-6260
FAX (575) 523-1660

Copyright© 2019, GEO-TEST, INC.

GEO-TEST

FOUNDATIONS

Shallow spread-type footings bearing directly on a minimum thickness of 2.0 feet of properly compacted structural fill are recommended for the support of the structure. An allowable bearing pressure of 2,000 pounds per square foot is recommended for footing design. This bearing pressure applies to full dead load plus realistic live loads and can be safely increased by one-third for totals loads including wind and seismic forces.

Exterior footings should be established a minimum of 2.0 feet below lowest adjacent finished grade, while interior footings should be at least 12 inches below finished floor grade. The minimum recommended width of square and continuous footings is 2.0 and 1.33 feet, respectively.

Resistance to lateral forces will be provided by soil friction between the base of floor slabs and footings and the soil and by passive earth resistance against the sides of the footings and stem walls. A coefficient of friction of 0.40 should be used for computing the lateral resistance between bases of footings and slabs and the soil. With backfill placed as recommended in the site grading section of this report, a passive soil resistance equivalent to a fluid weighing 375 pounds per cubic foot should be used for analysis.

Total settlements of foundations designed and constructed as recommended herein are estimated not to exceed ¾ inch for the soil moisture contents encountered during this investigation or moisture contents introduced during construction. Differential movements should be less than 75 percent of total movements. Significant post-construction moisture increases in the supporting soils could create additional movements and could cause excessive movements, at least in some areas of the site. Accordingly, the moisture protection provisions as recommended in a following section of this report are considered critical for the satisfactory performance of the structure.

SLABS ON GRADE

Concrete slabs on grade should be founded on a minimum of 2.0 feet of properly compacted, non-expansive structural fill and constructed in conformance with the methods outlined in ACI 302.1R-04.

Adequate support for lightly loaded slab-on-grade floors will be provided by the structural fill when compacted as recommended in the Site Grading section of this report. Thus, the use of granular base for structural support of lightly loaded slabs is not considered necessary. However, should it be desired as a working surface, or to increase the modulus of subgrade reaction, a course of granular base can be placed beneath concrete floor slabs.

Where granular base is used beneath the slabs, it should have a plasticity index of no greater than 3 and meet the following grading requirements:

GEO-TEST, INC.
3204 RICHARDS LANE
SANTA FE,
NEW MEXICO
87507
(505) 471-1101
FAX (505) 471-2245

8528 CALLE ALAMEDA NE
ALBUQUERQUE,
NEW MEXICO
87113
(505) 857-0933
FAX (505) 857-0803

2805-A LAS VEGAS CT.
LAS CRUCES,
NEW MEXICO
88007
(575) 526-6260
FAX (575) 523-1660

Copyright© 2019, GEO-TEST, INC.

GEO-TEST

Sieve Size Square Openings	Percent Passing by Dry Weight
1 Inch	100
¾ Inch	70-100
No. 4	35-85
No. 200	0-10

The granular base should be compacted to at least 95 percent of maximum dry density as determined in accordance with ASTM D1557.

Any heavily loaded slabs on the project bearing on structural fill should be designed using a modulus of subgrade reaction of 200 pounds per square inch per inch of deflection. If a 6 inch thickness of granular base is placed and compacted beneath the slabs, the modulus of subgrade reaction can be increased to 300 pounds per square inch per inch of deflection.

The granular base may act as a capillary barrier but will not totally eliminate the rise of moisture to the slabs. If floor coverings are proposed which are highly sensitive to moisture, or highly moisture sensitive equipment will be installed within the buildings, a synthetic vapor barrier should be installed to minimize moisture intrusion through the slab. A minimum of 4 inches of granular base as recommended above should be placed between the vapor barrier and the slab. Barriers should be overlapped a minimum of 6 inches at joints, should be carefully fitted around service openings and should conform with ACI 302.1R-04 specifications.

RETAINING WALLS

All retaining walls on the project should be founded on foundations designed and constructed as recommended for the building.

Lateral pressure against retaining walls will depend upon their degree of restraint. Walls which are restrained so as to limit movement at the top of the wall to less than 0.001 times the height of the wall should be designed for an 'at rest' earth pressure of 60 pounds per square foot of depth. Walls free to move at the top should be designed using an 'active' earth pressure equal to 40 pounds per square foot per foot of depth. These recommended lateral pressures are applicable to a condition of horizontal backfill without surcharge loads. Analysis of earth pressures produced by sloping backfill or surcharge loads can be provided by this firm upon request.

The lateral pressures presented above assume no build up of hydrostatic pressures behind the walls. To prevent the buildup of hydrostatic pressures, adequate weep holes should be provided or composite drainage systems such as Miradrain or equivalent can be installed on the backside of the walls prior to backfilling. The drainage layer should be connected to a collector pipe at the base of the walls and routed to a sump or to a positive gravity drain.

GEO-TEST, INC.
3204 RICHARDS LANE
SANTA FE,
NEW MEXICO
87507
(505) 471-1101
FAX (505) 471-2245

8528 CALLE ALAMEDA NE
ALBUQUERQUE,
NEW MEXICO
87113
(505) 857-0933
FAX (505) 857-0803

2805-A LAS VEGAS CT.
LAS CRUCES,
NEW MEXICO
88007
(575) 526-6260
FAX (575) 523-1660

Copyright© 2019, GEO-TEST, INC.

GEO-TEST

GEO-TEST, INC.
3204 RICHARDS LANE
SANTA FE,
NEW MEXICO
87507
(505) 471-1101
FAX (505) 471-2245

8528 CALLE ALAMEDA NE
ALBUQUERQUE,
NEW MEXICO
87113
(505) 857-0933
FAX (505) 857-0803

2805-A LAS VEGAS CT.
LAS CRUCES,
NEW MEXICO
88007
(575) 526-6260
FAX (575) 523-1660

Retaining wall backfill should meet the structural fill specifications outlined in the Site Grading section of this report. During backfilling, the contractor should be limited to the use of hand operated compaction equipment within a zone of about 3 feet horizontally from the back of the walls. The use of heavier equipment could apply lateral pressures well in excess of the recommended design earth pressure, particularly over the upper portions of the walls.

PAVEMENT SECTION DESIGN

The existing near surface soils underlying the site generally classify as silty sand (SM) according to the Unified Soil Classification System (USCS). These soils classify as A-2-4 according to the American Association of State Highway and Transportation Officials (AASHTO) soil classification system. According to the NMDOT, these soils possess a correlated R-value of 55 and are considered excellent subgrade soils for pavement support.

As such, no special subgrade preparation will be required. Prior to the placement of the pavement section recommended below, the subgrade should be scarified to a depth of 12 inches, moisture conditioned to ±2 percent of optimum moisture content and compacted to a minimum of 95 percent of maximum dry density as determined in accordance with ASTM D-1557.

With the above recommended subgrade preparation, a flexible pavement section consisting of 3 inches of Hot Mix Asphalt (HMA) over 6 inches of aggregate base course, placed directly over a minimum of 12 inches of properly compacted subgrade material is recommended for automobile parking and drive lanes only. Areas subjected to heavy truck traffic, including busses, trash and delivery trucks should have the asphalt sections thickened by 1 inch. The pavement recommendations are in general conformance with publications prepared by the *Asphalt Institute.*

The HMA should be SPIII or SPIV, compacted to a target density of 94.5 percent, with a minimum compaction of 92 and a maximum compaction of 97 percent of the theoretical maximum density. The recommended Performance Grade (PG) asphalt binder used should be 64-22 according to the NMDOT Design Manual.

With the above recommended subgrade preparation, a rigid pavement section consisting of 6 inches of Portland Cement Concrete (PCC) placed directly over the minimum of 12 inches of properly compacted subgrade material is recommended for areas subjected to regular heavy truck traffic such as dumpster pads or delivery/drop-off areas. The pavement recommendations are in general conformance with ACI 330R-01 *Guide for Design and Construction of Concrete Parking Lots.*

The PCC should have a minimum compressive strength of 4000 psi, be air entrained to between 4.5 and 7.0 percent, and have a maximum aggregate size of 2 inches. The concrete should be placed at a maximum slump of 4

Copyright© 2019, GEO-TEST, INC.

GEO-TEST

inches. Admixtures may be used to increase the slump and workability provided that the compressive strength is not compromised.

The use of reinforcement within the PCC should be left to the discretion of the structural engineer; however, it is recommended that the pavement be constructed with load transfer joints designed for heavy traffic.

SITE GRADING

The following general guidelines should be included in the project construction specifications to provide a basis for quality control during site grading. It is recommended that all structural fill and backfill be placed and compacted under engineering observation and in accordance with the following:

1) After clearing and grubbing, the existing site soils throughout the building area should be overexcavated to such an extent as to provide for at least 2.0 feet of properly compacted structural fill beneath all footings and floor slabs. The overexcavation limits should extend laterally beyond the footing perimeters equal to the depth of fill beneath their bases. The soils exposed at the base of the overexcavation as well as native soils in areas to receive fill should be densified before placement of structural fill.

2) Densification of the exposed native soils should consist of scarifying to a depth of 12 inches, moisture conditioning to the optimum moisture content or above and compacting the subgrade to a minimum of 95 percent of maximum dry density as determined in accordance with ASTM D-1557.

3) The results of this investigation indicate that most of the on-site soils will meet the criteria for structural fill, however, some blending may be required.

4) All structural fill and backfill should be free of vegetation and debris and contain no rocks larger than 3 inches. Gradation of the fill materials, as determined in accordance with ASTM D-422, should be as follows:

Size	Percent Passing
3 inch	100
No. 4	60 - 100
No. 200	15 - 35

5) The plasticity index of the structural fill should be no greater than 15 when tested in accordance with ASTM D-4318.

6) Pavement subgrade should have a correlated R-Value of 50 or greater. Pavement base course should meet the specifications for NMDOT Type I base course.

GEO-TEST, INC.
3204 RICHARDS LANE
SANTA FE,
NEW MEXICO
87507
(505) 471-1101
FAX (505) 471-2245

8528 CALLE ALAMEDA NE
ALBUQUERQUE,
NEW MEXICO
87113
(505) 857-0933
FAX (505) 857-0803

2805-A LAS VEGAS CT.
LAS CRUCES,
NEW MEXICO
88007
(575) 526-6260
FAX (575) 523-1660

Copyright© 2019, GEO-TEST, INC.

GEO-TEST

7) Structural fill, general backfill, subgrade and base course, consisting of soils approved by the geotechnical engineer, shall be placed in 8 inch loose lifts and compacted with approved compaction equipment. Loose lifts should be reduced to 4 inches if hand held compaction equipment is used. All compaction of fill or backfill shall be accomplished to a minimum of 95 percent of the maximum dry density as determined in accordance with ASTM D-1557. The moisture content of the structural fill during compaction should be within 2 percent of the optimum moisture content.

8) Tests for degree of compaction should be determined by the ASTM D-1556 method or ASTM D-6938. Observation and field tests should be carried on during fill and backfill placement by the geotechnical engineer to assist the contractor in obtaining the required degree of compaction. If less than 95 percent is indicated, additional compaction effort should be made with adjustment of the moisture content as necessary until 95 percent compaction is obtained.

EXCAVATIONS

Excavated slopes for foundation and utility construction should be designed and constructed in accordance with 29 CFR 1926, Subpart P, and any applicable state or local regulations. Excavated temporary and permanent slopes should not exceed 2 to 1 (horizontal to vertical).

Excavation of the surficial soils can be readily accomplished using normal earthmoving equipment.

MOISTURE PROTECTION

Precautions should be taken during and after construction to minimize moisture increase of foundation soils. Accumulations of excessive moisture could be harmful to some types of interior flooring, to HVAC ductwork beneath the slabs, and can weaken or cause other changes in the soils supporting the foundations and slabs. This can cause differential movement of the foundations and can result in cosmetic or structural damage to the structure.

Positive drainage should be established away from the exterior walls of the structure as well as the perimeter of undeveloped portions of the building pad. A typical adequate slope is 6 inches in the first 5 feet with positive drainage being provided from those points to streets, pavement or natural water courses. If necessary to provide positive drainage, the building area should be raised above adjacent grades with structural fill.

Roof runoff from the structure should be collected by gutters and downspouts or roof canales and discharged to splash blocks which carry water rapidly away from the structure's foundation. Should lot size or other factors impede positive drainage away from the structure to less than 5 feet from foundations, a non-perforated drain system should be installed to carry water to a minimum of five feet away from foundations or to streets or natural water courses.

GEO-TEST, INC.
3204 RICHARDS LANE
SANTA FE,
NEW MEXICO
87507
(505) 471-1101
FAX (505) 471-2245

8528 CALLE ALAMEDA NE
ALBUQUERQUE,
NEW MEXICO
87113
(505) 857-0933
FAX (505) 857-0803

2805-A LAS VEGAS CT.
LAS CRUCES,
NEW MEXICO
88007
(575) 526-6260
FAX (575) 523-1660

Copyright© 2019, GEO-TEST, INC.

GEO-TEST

Utility backfill should be well compacted and should meet the specifications outlined in the Site Grading section of this report. Special care should be taken during installation of the subfloor sewer and water lines to reduce the possibility of future subsurface saturation.

Irrigation within 10 feet of foundations is discouraged or at the very least should be carefully controlled. Proper landscaping and drainage maintenance are required to preclude accumulation of excessive moisture in the soils below the structure and throughout the site. This should include but is not limited to routine maintenance checks of irrigation system to ensure no leakage and proper functionality and that irrigation is adjusted and maintained seasonally so that over-watering does not occur. Native drought resistant plants are recommended for use in landscaping. Landscape features should not impede positive drainage away from foundations as recommended above.

Detention ponds or any other drainage/landscaping feature which allows for surface waters to infiltrate the subsurface soils should not be placed within 20 feet of building foundations.

The foregoing recommendations should only be considered minimum requirements for overall site development. It is recommended that a civil/drainage engineer be consulted for more detailed grading and drainage recommendations.

FOUNDATION REVIEW AND INSPECTION

This report has been prepared to aid in the evaluation of this site and to assist in the design of this project. It is recommended that the geotechnical engineer be provided the opportunity to review the final design drawings and specifications in order to determine whether the recommendations in this report are applicable to the final design. Review of the final design drawings and specifications should be noted in writing by the geotechnical engineer.

In order to permit correlation between the conditions encountered during construction and to confirm recommendations presented herein, it is recommended that the geotechnical engineer be retained to perform continuous observations and testing during the earthwork portion of this project. Observation and testing should be performed during construction to confirm that suitable fill soils are placed upon competent materials and properly compacted and foundation elements penetrate the recommended soils.

GEO-TEST, INC.
3204 RICHARDS LANE
SANTA FE,
NEW MEXICO
87507
(505) 471-1101
FAX (505) 471-2245

8528 CALLE ALAMEDA NE
ALBUQUERQUE,
NEW MEXICO
87113
(505) 857-0933
FAX (505) 857-0803

2805-A LAS VEGAS CT.
LAS CRUCES,
NEW MEXICO
88007
(575) 526-6260
FAX (575) 523-1660

Copyright© 2019, GEO-TEST, INC.

GEO-TEST

CLOSURE

Our conclusions, recommendations and opinions presented herein are:

1) Based upon our evaluation and interpretation of the findings of the field and laboratory program.

2) Based upon an interpolation of soil conditions between and beyond the explorations.

3) Subject to confirmation of the conditions encountered during construction.

4) Based upon the assumption that sufficient observation will be provided during construction.

5) Prepared in accordance with generally accepted professional geotechnical engineering principles and practice.

This report has been prepared for the sole use of G. Don Dudley Architect, Ltd. specifically to aid in the design of the proposed new Rio Rancho Senior Center – Phase 1 in Rio Rancho, New Mexico, and not for use by any third parties without consent.

We make no other warranty, either expressed or implied. Any person using this report for bidding or construction purposes should perform such independent investigation as they deem necessary to satisfy themselves as to the surface and subsurface conditions to be encountered and the procedures to be used in the performance of work on this project. If conditions encountered during construction appear to be different than indicated by this report, this office should be notified.

All soil samples will be discarded 60 days after the date of this report unless we receive a specific request to retain the samples for a longer period of time.

GEO-TEST, INC.
3204 RICHARDS LANE
SANTA FE,
NEW MEXICO
87507
(505) 471-1101
FAX (505) 471-2245

8528 CALLE ALAMEDA NE
ALBUQUERQUE,
NEW MEXICO
87113
(505) 857-0933
FAX (505) 857-0803

2805-A LAS VEGAS CT.
LAS CRUCES,
NEW MEXICO
88007
(575) 526-6260
FAX (575) 523-1660

Copyright© 2019, GEO-TEST, INC.

BORING LOCATION MAP

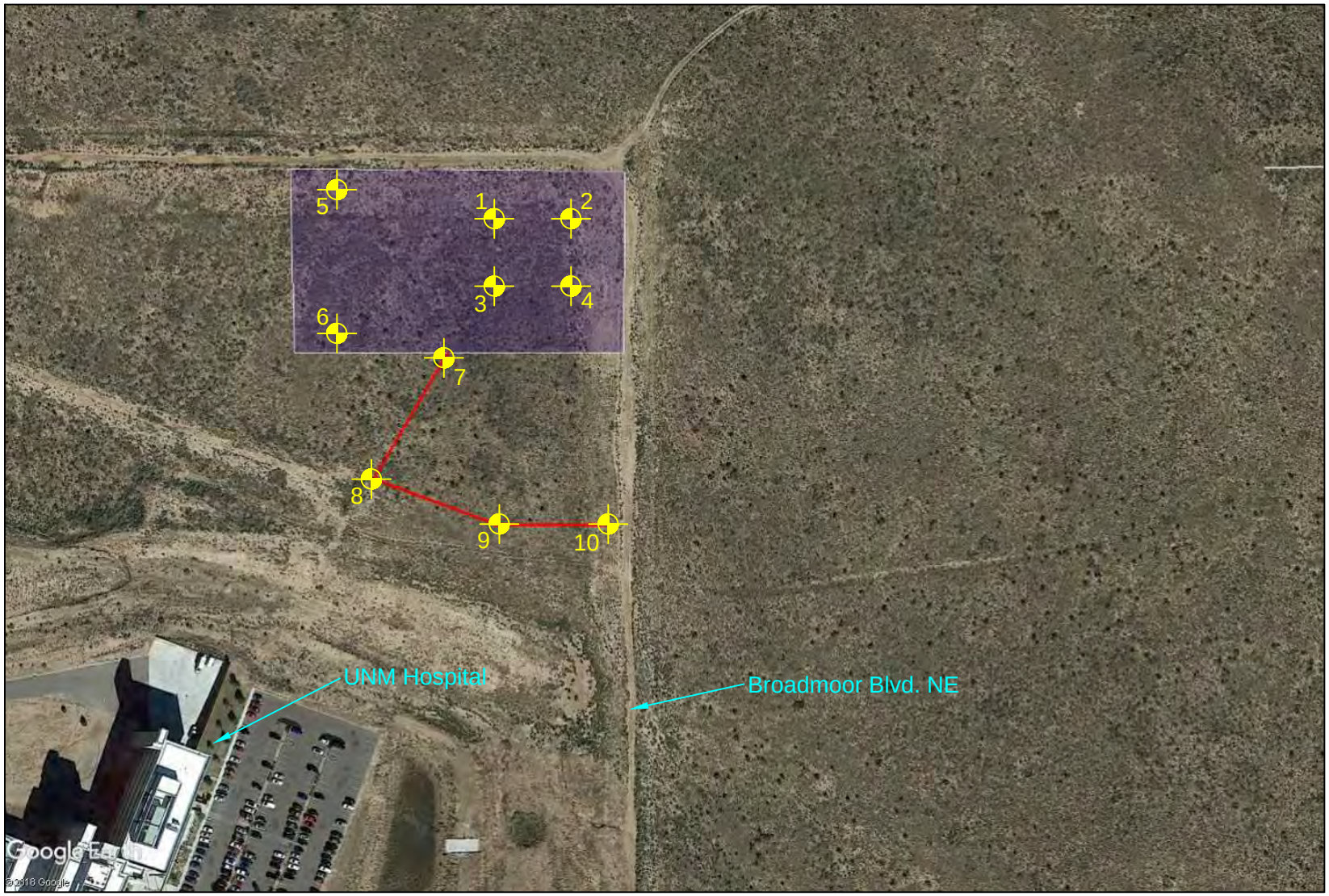

Rio Rancho Senior Center - Phase 1
Rio Rancho, New Mexico
Job No. 1-90208

Figure 1

N
W E
S

GEO-TEST
GEOTECHNICAL ENGINEERING
AND MATERIAL TESTING

GEO-TEST

Project: Rio Rancho Senior Center-Phase 1
Date: 03/19/2019 Project No: 1-90208
Elevation: Type: 5.5" OD HSA

LOG OF TEST BORINGS

GROUNDWATER DEPTH

NO: 01

During Drilling: none After 24 Hours:

DEPTH (Ft)	LOG	SAMPLE INTERVAL	TYPE	N. BLOWS/FT	MOISTURE %	DRY DENSITY (pcf)	USC	DESCRIPTION
		X	SS	5-6-13 19	3		SM	SILTY SAND, non-plastic, medium dense, dry, light brown
5		X	SS	13-13-12 25	12		SC	CLAYEY SAND, medium plasticity, medium dense, slightly moist, red
10		X	SS	21-24-37 61	2		SP-SM	POORLY GRADED SAND with SILT, non-plastic, very dense, dry, light brown
15		X	SS	14-21-32 53	2			
20		X	SS	29-50/6" 50/6"	4			
25								Stopped Auger @ 19.5 feet Stopped Sampler @ 20.5 feet

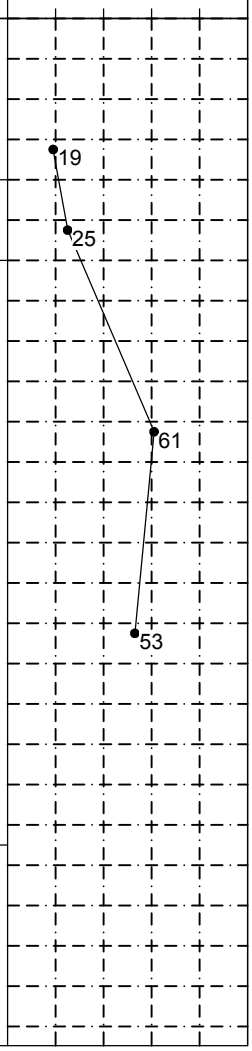

LEGEND

SS - Split Spoon
AC - Auger Cuttings
UD/SL - Undisturbed Sleeve
AMSL - Above Mean Sea Level
CS - Continuous Sampler
UD - Undisturbed
ST - Shelby Tube

Stratification lines represent approximate boundaries between soil types. Transitions may be gradual. Water level readings have been made at times and under conditions stated. Fluctuations of groundwater may occur due to factors other than those present at the time measurments were made.

LOG OF TEST BORING 1-90208 RIO RANCHO SENIOR CENTER-PHASE 1.GPJ GEO TEST.GDT 4/10/19

GEO-TEST

Project: Rio Rancho Senior Center-Phase 1
Date: 03/19/2019 Project No: 1-90208
Elevation: Type: 5.5" OD HSA

LOG OF TEST BORINGS

GROUNDWATER DEPTH

NO: 02

During Drilling: none After 24 Hours:

DEPTH (Ft)	LOG	SAMPLE INTERVAL	TYPE	N. BLOWS/FT	MOISTURE %	DRY DENSITY (pcf)	USC	DESCRIPTION
		X	SS	4-3-4 7	7		SM	SILTY SAND, non-plastic, loose, dry, light brown
5		X	SS	5-5-5 10	5			
10		X	SS	9-19-32 51	3		SP-SM	POORLY GRADED SAND with SILT, non-plastic, very dense, dry, light brown
15		X	SS	29-50/6" 50/6"	2			
20		X	SS	29-45-50 95	3			
								Stopped Auger @ 19.5 feet Stopped Sampler @ 21 feet
25								

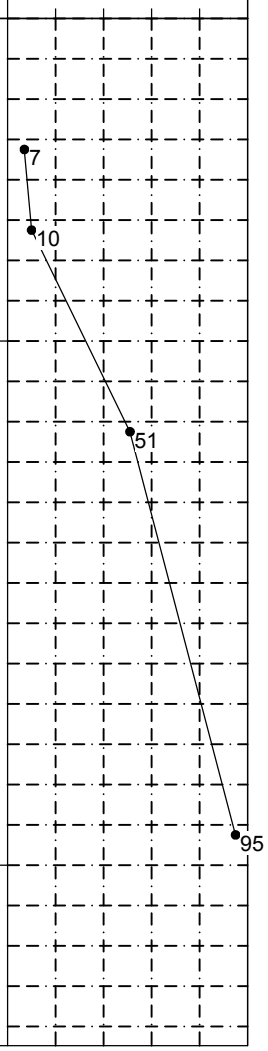

LEGEND

SS - Split Spoon
AC - Auger Cuttings
UD/SL - Undisturbed Sleeve
AMSL - Above Mean Sea Level
CS - Continuous Sampler
UD - Undisturbed
ST - Shelby Tube

Stratification lines represent approximate boundaries between soil types. Transitions may be gradual. Water level readings have been made at times and under conditions stated. Fluctuations of groundwater may occur due to factors other than those present at the time measurments were made.

LOG OF TEST BORING 1-90208 RIO RANCHO SENIOR CENTER-PHASE 1.GPJ GEO TEST.GDT 4/10/19

GEO-TEST

Project: Rio Rancho Senior Center-Phase 1
Date: 03/19/2019 Project No: 1-90208
Elevation: Type: 5.5" OD HSA

LOG OF TEST BORINGS

GROUNDWATER DEPTH

NO: 03

During Drilling: none After 24 Hours:

DEPTH (Ft)	LOG	SAMPLE INTERVAL	TYPE	N. BLOWS/FT	MOISTURE %	DRY DENSITY (pcf)	USC	DESCRIPTION
		X	SS	5-6-5 11	4		SM	SILTY SAND, non-plastic, medium dense to dense, dry, light brown
5		X	SS	5-6-12 18	6			
10		X	SS	11-18-19 37	2			
15		X	SS	14-26-36 62	2		SP-SM	POORLY GRADED SAND with SILT, non-plastic, very dense, dry, light brown
20		X	SS	10-26-50 76	2			
								Stopped Auger @ 19.5 feet Stopped Sampler @ 21 feet
25								

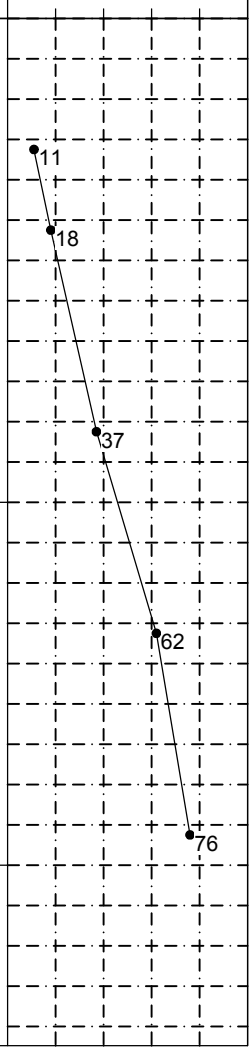

LEGEND

SS - Split Spoon
AC - Auger Cuttings
UD/SL - Undisturbed Sleeve
AMSL - Above Mean Sea Level
CS - Continuous Sampler
UD - Undisturbed
ST - Shelby Tube

Stratification lines represent approximate boundaries between soil types. Transitions may be gradual. Water level readings have been made at times and under conditions stated. Fluctuations of groundwater may occur due to factors other than those present at the time measurments were made.

LOG OF TEST BORING 1-90208 RIO RANCHO SENIOR CENTER-PHASE 1.GPJ GEO TEST.GDT 4/10/19

GEO-TEST

Project: Rio Rancho Senior Center-Phase 1
Date: 03/19/2019 Project No: 1-90208
Elevation: Type: 5.5" OD HSA

LOG OF TEST BORINGS

GROUNDWATER DEPTH

NO: 04

During Drilling: none After 24 Hours:

DEPTH (Ft)	LOG	SAMPLE INTERVAL	TYPE	N. BLOWS/FT	MOISTURE %	DRY DENSITY (pcf)	USC	DESCRIPTION
		X	SS	7-9-9 18	5		SM	SILTY SAND, non-plastic, medium dense, dry, light brown
5		X	SS	7-6-6 12	4			
10		X	SS	4-4-7 11	2			
15		X	SS	12-29-42 71	2		SP-SM	POORLY GRADED SAND with SILT, non-plastic, very dense, dry, light brown
20		X	SS	16-50/6" 50/6"	2			Stopped Auger @ 19.5 feet Stopped Sampler @ 20.5 feet
25								

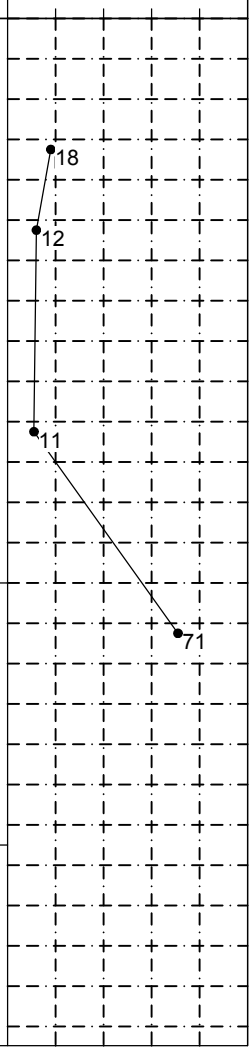

LEGEND

SS - Split Spoon
AC - Auger Cuttings
UD/SL - Undisturbed Sleeve
AMSL - Above Mean Sea Level
CS - Continuous Sampler
UD - Undisturbed
ST - Shelby Tube

Stratification lines represent approximate boundaries between soil types. Transitions may be gradual. Water level readings have been made at times and under conditions stated. Fluctuations of groundwater may occur due to factors other than those present at the time measurments were made.

LOG OF TEST BORING 1-90208 RIO RANCHO SENIOR CENTER-PHASE 1.GPJ GEO TEST.GDT 4/10/19

GEO-TEST

Project: Rio Rancho Senior Center-Phase 1
Date: 03/19/2019 Project No: 1-90208
Elevation: Type: 5.5" OD HSA

LOG OF TEST BORINGS

GROUNDWATER DEPTH

NO: 05

During Drilling: none After 24 Hours:

DEPTH (Ft)	LOG	SAMPLE INTERVAL	TYPE	N. BLOWS/FT	MOISTURE %	DRY DENSITY (pcf)	USC	DESCRIPTION
		X	SS	10-7-11 18	3		SM	SILTY SAND, non-plastic, medium dense, dry, light brown
5		X	SS	7-12-14 26	4			
10		X	SS	15-23-50 73	2		SP-SM	POORLY GRADED SAND with SILT, non-plastic, very dense, dry, light brown
15		X	SS	23-28-40 68	3			
								Stopped Auger @ 14.5 feet Stopped Sampler @ 16 feet
20								
25								

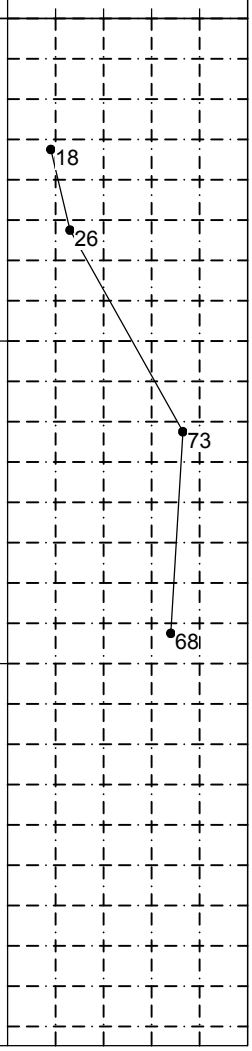

LEGEND

SS - Split Spoon
AC - Auger Cuttings
UD/SL - Undisturbed Sleeve
AMSL - Above Mean Sea Level
CS - Continuous Sampler
UD - Undisturbed
ST - Shelby Tube

Stratification lines represent approximate boundaries between soil types. Transitions may be gradual. Water level readings have been made at times and under conditions stated. Fluctuations of groundwater may occur due to factors other than those present at the time measurments were made.

LOG OF TEST BORING 1-90208 RIO RANCHO SENIOR CENTER-PHASE 1.GPJ GEO TEST.GDT 4/10/19

GEO-TEST

Project: Rio Rancho Senior Center-Phase 1
Date: 03/26/2019 Project No: 1-90208
Elevation: Type: 5.5" OD HSA

LOG OF TEST BORINGS

GROUNDWATER DEPTH

NO: 06

During Drilling: none After 24 Hours:

DEPTH (Ft)	LOG	SAMPLE INTERVAL	TYPE	N. BLOWS/FT	MOISTURE %	DRY DENSITY (pcf)	USC	DESCRIPTION
		X	SS	18-18-17 35	5		SM	SILTY SAND, non-plastic, medium dense, dry, light brown
5		X	SS	6-6-5 11	4			
10		X	SS	16-25-32 57	9		SC	CLAYEY SAND, medium plasticity, very dense, slighty moist, red
							SP-SM	POORLY GRADED SAND with SILT, non-plastic, very dense, dry, light brown
15		X	SS	7-25-30 55	4			
								Stopped Auger @ 14.5 feet Stopped Sampler @ 16 feet
20								
25								

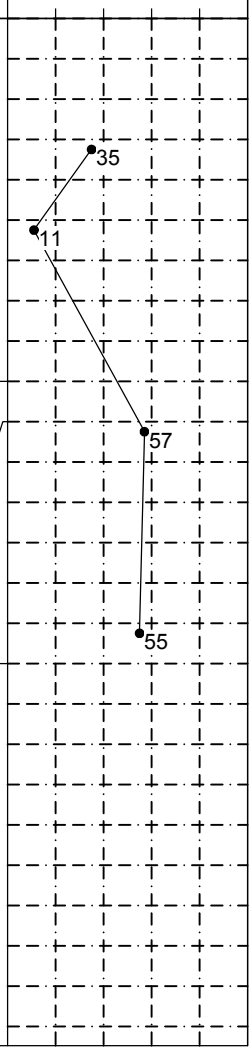

LEGEND

SS - Split Spoon
AC - Auger Cuttings
UD/SL - Undisturbed Sleeve
AMSL - Above Mean Sea Level
CS - Continuous Sampler
UD - Undisturbed
ST - Shelby Tube

Stratification lines represent approximate boundaries between soil types. Transitions may be gradual. Water level readings have been made at times and under conditions stated. Fluctuations of groundwater may occur due to factors other than those present at the time measurments were made.

LOG OF TEST BORING 1-90208 RIO RANCHO SENIOR CENTER-PHASE 1.GPJ GEO TEST.GDT 4/10/19

GEO-TEST

Project: Rio Rancho Senior Center-Phase 1
Date: 03/26/2019 Project No: 1-90208
Elevation: Type: 5.5" OD HSA

LOG OF TEST BORINGS

GROUNDWATER DEPTH

NO: 07

During Drilling: none After 24 Hours:

DEPTH (Ft)	LOG	SAMPLE INTERVAL	TYPE	N. BLOWS/FT	MOISTURE %	DRY DENSITY (pcf)	USC	SUBSURFACE PROFILE DESCRIPTION	N blows/ft 20 40 60 80
			AC		4		SM	SILTY SAND, non-plastic, dry, light brown	
5								Stopped Auger @ 5 feet	
10									
15									
20									
25									

LOG OF TEST BORING 1-90208 RIO RANCHO SENIOR CENTER-PHASE 1.GPJ GEO TEST.GDT 4/10/19

LEGEND

SS - Split Spoon
AC - Auger Cuttings
UD/SL - Undisturbed Sleeve
AMSL - Above Mean Sea Level
CS - Continuous Sampler
UD - Undisturbed
ST - Shelby Tube

Stratification lines represent approximate boundaries between soil types. Transitions may be gradual. Water level readings have been made at times and under conditions stated. Fluctuations of groundwater may occur due to factors other than those present at the time measurments were made.

GEO-TEST

Project: Rio Rancho Senior Center-Phase 1
Date: 03/26/2019 Project No: 1-90208
Elevation: Type: 5.5" OD HSA

LOG OF TEST BORINGS

GROUNDWATER DEPTH

NO: 08

During Drilling: none After 24 Hours:

DEPTH (Ft)	LOG	SAMPLE INTERVAL	TYPE	N. BLOWS/FT	MOISTURE %	DRY DENSITY (pcf)	USC	DESCRIPTION	N blows/ft 20 40 60 80
			AC		4		SM	SILTY SAND, non-plastic, dry, light brown	
5								Stopped Auger @ 5 feet	
10									
15									
20									
25									

LOG OF TEST BORING 1-90208 RIO RANCHO SENIOR CENTER-PHASE 1.GPJ GEO TEST.GDT 4/10/19

LEGEND

SS - Split Spoon
AC - Auger Cuttings
UD/SL - Undisturbed Sleeve
AMSL - Above Mean Sea Level
CS - Continuous Sampler
UD - Undisturbed
ST - Shelby Tube

Stratification lines represent approximate boundaries between soil types. Transitions may be gradual. Water level readings have been made at times and under conditions stated. Fluctuations of groundwater may occur due to factors other than those present at the time measurments were made.

GEO-TEST

Project: Rio Rancho Senior Center-Phase 1
Date: 03/26/2019 Project No: 1-90208
Elevation: Type: 5.5" OD HSA

LOG OF TEST BORINGS

GROUNDWATER DEPTH

NO: 09

During Drilling: none After 24 Hours:

DEPTH (Ft)	LOG	SAMPLE INTERVAL	TYPE	N. BLOWS/FT	MOISTURE %	DRY DENSITY (pcf)	USC	DESCRIPTION	N blows/ft 20 40 60 80
			AC		9		SM	SILTY SAND, non-plastic, dry, light brown	
5								Stopped Auger @ 5 feet	
10									
15									
20									
25									

LOG OF TEST BORING 1-90208 RIO RANCHO SENIOR CENTER-PHASE 1.GPJ GEO TEST.GDT 4/10/19

LEGEND

SS - Split Spoon
AC - Auger Cuttings
UD/SL - Undisturbed Sleeve
AMSL - Above Mean Sea Level
CS - Continuous Sampler
UD - Undisturbed
ST - Shelby Tube

Stratification lines represent approximate boundaries between soil types. Transitions may be gradual. Water level readings have been made at times and under conditions stated. Fluctuations of groundwater may occur due to factors other than those present at the time measurments were made.

GEO-TEST

Project: Rio Rancho Senior Center-Phase 1
Date: 03/26/2019 Project No: 1-90208
Elevation: Type: 5.5" OD HSA

LOG OF TEST BORINGS

GROUNDWATER DEPTH

NO: 10

During Drilling: none After 24 Hours:

DEPTH (Ft)	LOG	SAMPLE INTERVAL	TYPE	N. BLOWS/FT	MOISTURE %	DRY DENSITY (pcf)	USC	DESCRIPTION	N blows/ft 20 40 60 80
			AC		5		SM	SILTY SAND, non-plastic, dry, light brown	
5								Stopped Auger @ 5 feet	
10									
15									
20									
25									

LOG OF TEST BORING 1-90208 RIO RANCHO SENIOR CENTER-PHASE 1.GPJ GEO TEST.GDT 4/10/19

LEGEND

SS - Split Spoon
AC - Auger Cuttings
UD/SL - Undisturbed Sleeve
AMSL - Above Mean Sea Level
CS - Continuous Sampler
UD - Undisturbed
ST - Shelby Tube

Stratification lines represent approximate boundaries between soil types. Transitions may be gradual. Water level readings have been made at times and under conditions stated. Fluctuations of groundwater may occur due to factors other than those present at the time measurments were made.

SUMMARY OF LABORATORY RESULTS

						SIEVE ANALYSIS PERCENT PASSING											
TEST HOLE	DEPTH (FEET)	UNIFIED CLASS	(%) MOIST	LL	PI	NO 200	NO 100	NO 40	NO 10	NO 4	3/8"	1/2"	3/4"	1"	1 1/2"	2"	4"
01	3.0		3.1														
01	5.0		12.4														
01	10.0	SP-SM	2.0	NP	NP	6	14	83	100								
01	15.0		2.0														
01	20.0		4.3														
02	3.0	SM	6.6	NP	NP	18	36	73	93	98	99	100					
02	5.0		5.0														
02	10.0		2.6														
02	15.0	SP-SM	1.7	NP	NP	5	22	91	100								
02	20.0		2.8														
03	3.0		4.5														
03	5.0	SM	5.6	NP	NP	17	38	80	95	99	100						
03	10.0		1.7														
03	15.0		2.4														
03	20.0		2.2														
04	3.0	SM	5.0	NP	NP	21	46	85	98	100							
04	5.0		3.9														
04	10.0		2.3														
04	15.0	SP-SM	2.4	NP	NP	10	31	91	100								

GEO-TEST

LL = LIQUID LIMIT
PI = PLASTICITY INDEX
NP = NON PLASTIC or NO VALUE

Project: Rio Rancho Senior Center-Phase 1

Location: Rio Rancho NM

Number: 1-90208

SUMMARY OF LABORATORY RESULTS

						SIEVE ANALYSIS PERCENT PASSING											
TEST HOLE	DEPTH (FEET)	UNIFIED CLASS	(%) MOIST	LL	PI	NO 200	NO 100	NO 40	NO 10	NO 4	3/8"	1/2"	3/4"	1"	1 1/2"	2"	4"
04	20.0		1.9														
05	3.0		2.9														
05	5.0	SM	4.2	NP	NP	16	41	96	100								
05	10.0		2.3														
05	15.0		2.6														
06	3.0		5.1														
06	5.0		3.6														
06	10.0	SC	9.4	29	15	28	47	97	100								
06	15.0		4.5														
07	2.5	SM	3.7	NP	NP	16	41	90	99	99	100						
08	2.5	SM	4.2	NP	NP	25	53	89	100								
09	2.5	SM	9.2	NP	NP	30	49	87	100								
10	2.5	SM	4.7	NP	NP	29	54	84	96	98	100						

GEO-TEST

LL = LIQUID LIMIT
PI = PLASTICITY INDEX
NP = NON PLASTIC or NO VALUE

Project: Rio Rancho Senior Center-Phase 1

Location: Rio Rancho NM

Number: 1-90208

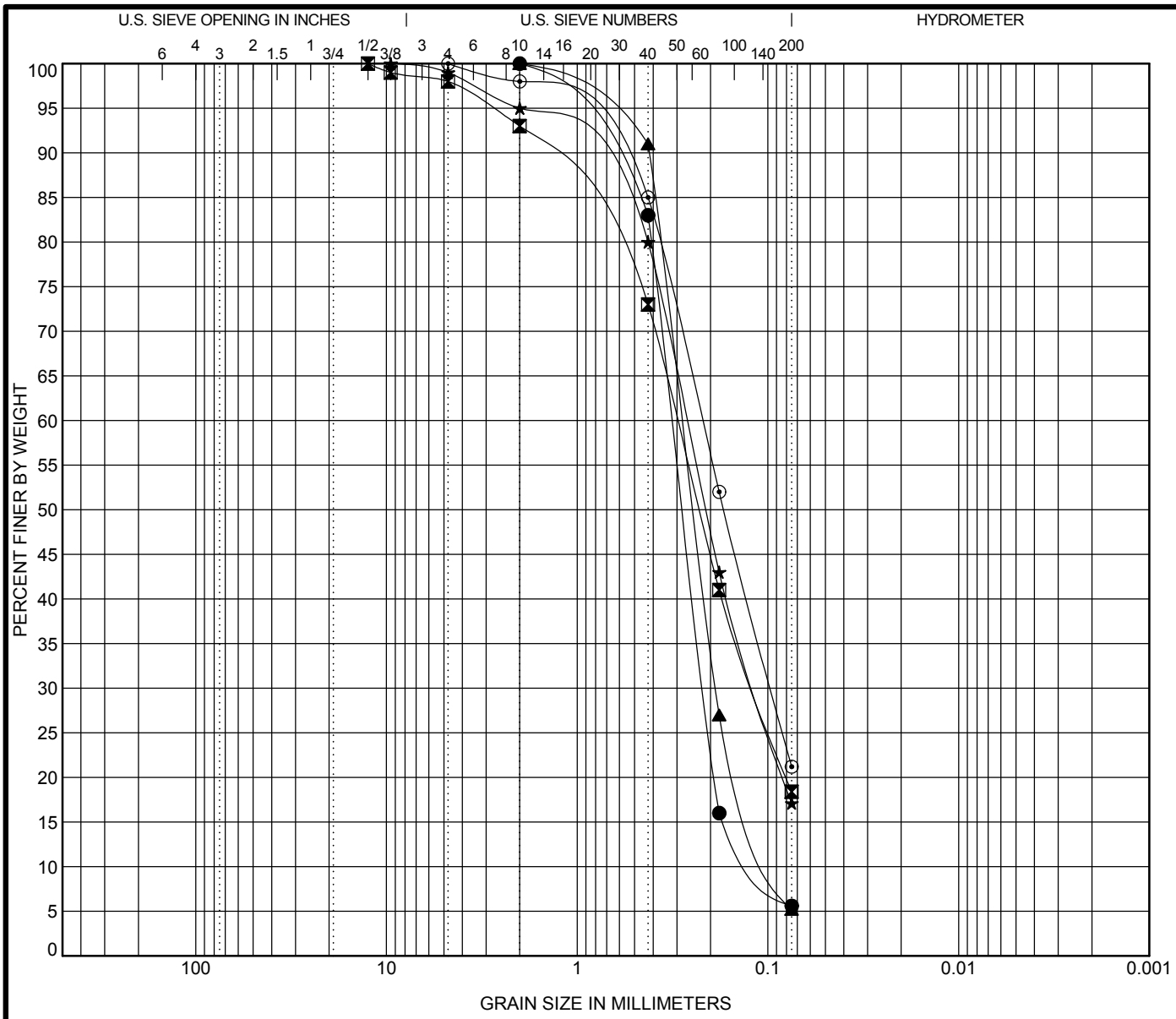

COBBLES	GRAVEL		SAND			SILT OR CLAY
	coarse	fine	coarse	medium	fine	

	Specimen Identification		Classification	LL	PL	PI	Cc	Cu
●	01	10.0	**POORLY GRADED SAND with SILT(SP-SM)**	**NP**	**NP**	**NP**	**1.35**	**2.91**
⊠	02	3.0	**SILTY SAND(SM)**	**NP**	**NP**	**NP**		
▲	02	15.0	**POORLY GRADED SAND with SILT(SP-SM)**	**NP**	**NP**	**NP**	**1.38**	**3.08**
★	03	5.0	**SILTY SAND(SM)**	**NP**	**NP**	**NP**		
⊙	04	3.0	**SILTY SAND(SM)**	**NP**	**NP**	**NP**		

	Specimen Identification		D100	D60	D30	D10	%Gravel	%Sand	%Silt	%Clay
●	01	10.0	**2**	**0.316**	**0.215**	**0.109**	**0.0**	**94.4**	**5.6**	
⊠	02	3.0	**12.5**	**0.3**	**0.118**		**2.0**	**79.6**	**18.4**	
▲	02	15.0	**2**	**0.28**	**0.187**	**0.091**	**0.0**	**94.8**	**5.2**	
★	03	5.0	**9.5**	**0.267**	**0.116**		**1.0**	**81.9**	**17.1**	
⊙	04	3.0	**4.75**	**0.222**	**0.096**		**0.0**	**78.8**	**21.2**	

GEO-TEST

GRAIN SIZE DISTRIBUTION

Project: Rio Rancho Senior Center-Phase 1

Location: Rio Rancho NM

Number: 1-90208

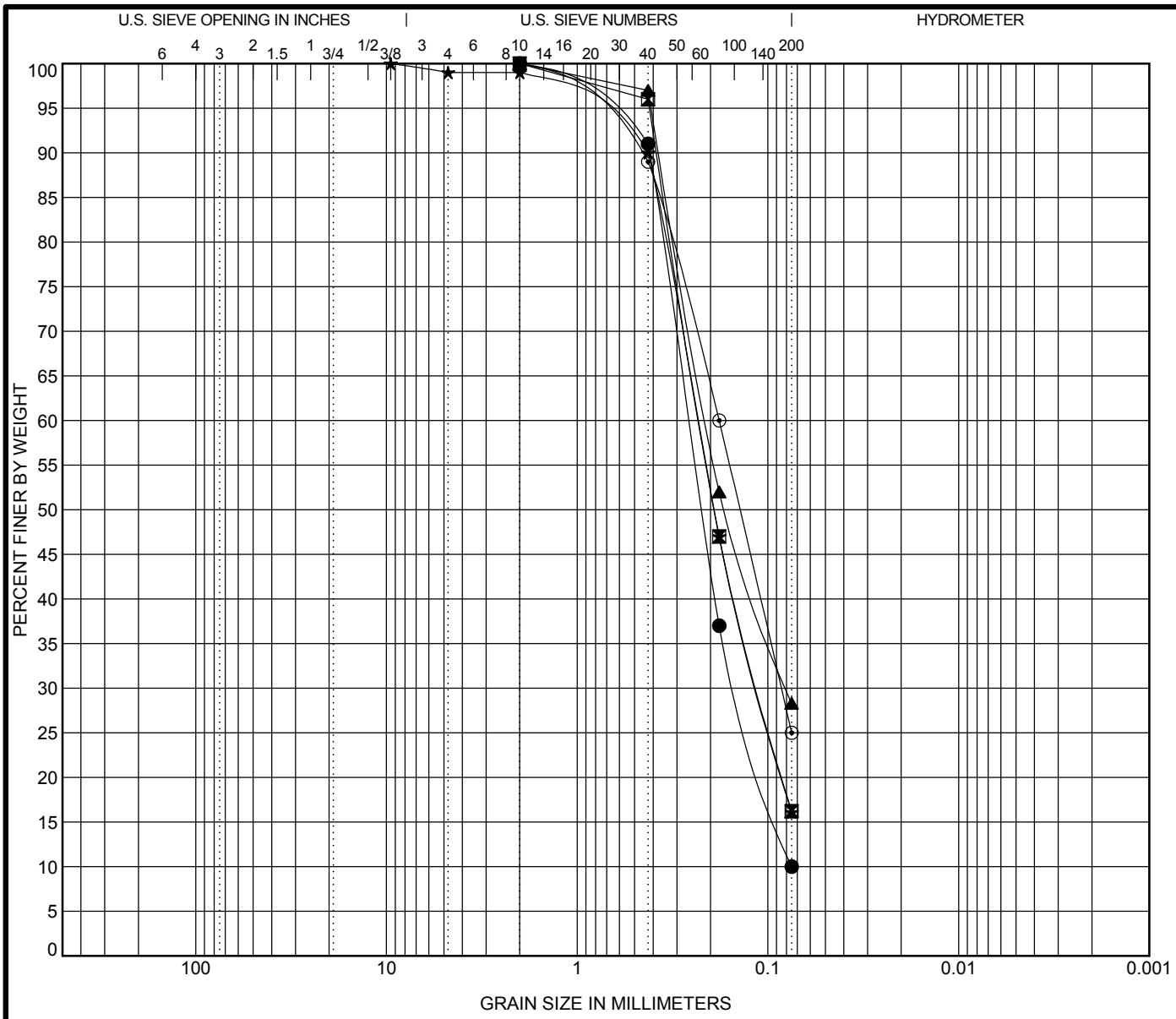

COBBLES	GRAVEL		SAND			SILT OR CLAY
	coarse	fine	coarse	medium	fine	

	Specimen Identification		Classification	LL	PL	PI	Cc	Cu
●	04	15.0	**POORLY GRADED SAND with SILT(SP-SM)**	**NP**	**NP**	**NP**	**1.06**	**3.46**
⊠	05	5.0	**SILTY SAND(SM)**	**NP**	**NP**	**NP**		
▲	06	10.0	**CLAYEY SAND(SC)**	**29**	**14**	**15**		
★	07	2.5	**SILTY SAND(SM)**	**NP**	**NP**	**NP**		
⊙	08	2.5	**SILTY SAND(SM)**	**NP**	**NP**	**NP**		

	Specimen Identification		D100	D60	D30	D10	%Gravel	%Sand	%Silt	%Clay
●	04	15.0	**2**	**0.26**	**0.143**	**0.075**	**0.0**	**90.0**	**10.0**	
⊠	05	5.0	**2**	**0.226**	**0.111**		**0.0**	**83.8**	**16.2**	
▲	06	10.0	**2**	**0.21**	**0.08**		**0.0**	**71.7**	**28.3**	
★	07	2.5	**9.5**	**0.233**	**0.111**		**1.0**	**82.9**	**16.1**	
⊙	08	2.5	**2**	**0.18**	**0.085**		**0.0**	**75.0**	**25.0**	

GEO-TEST

GRAIN SIZE DISTRIBUTION

Project: Rio Rancho Senior Center-Phase 1

Location: Rio Rancho NM

Number: 1-90208

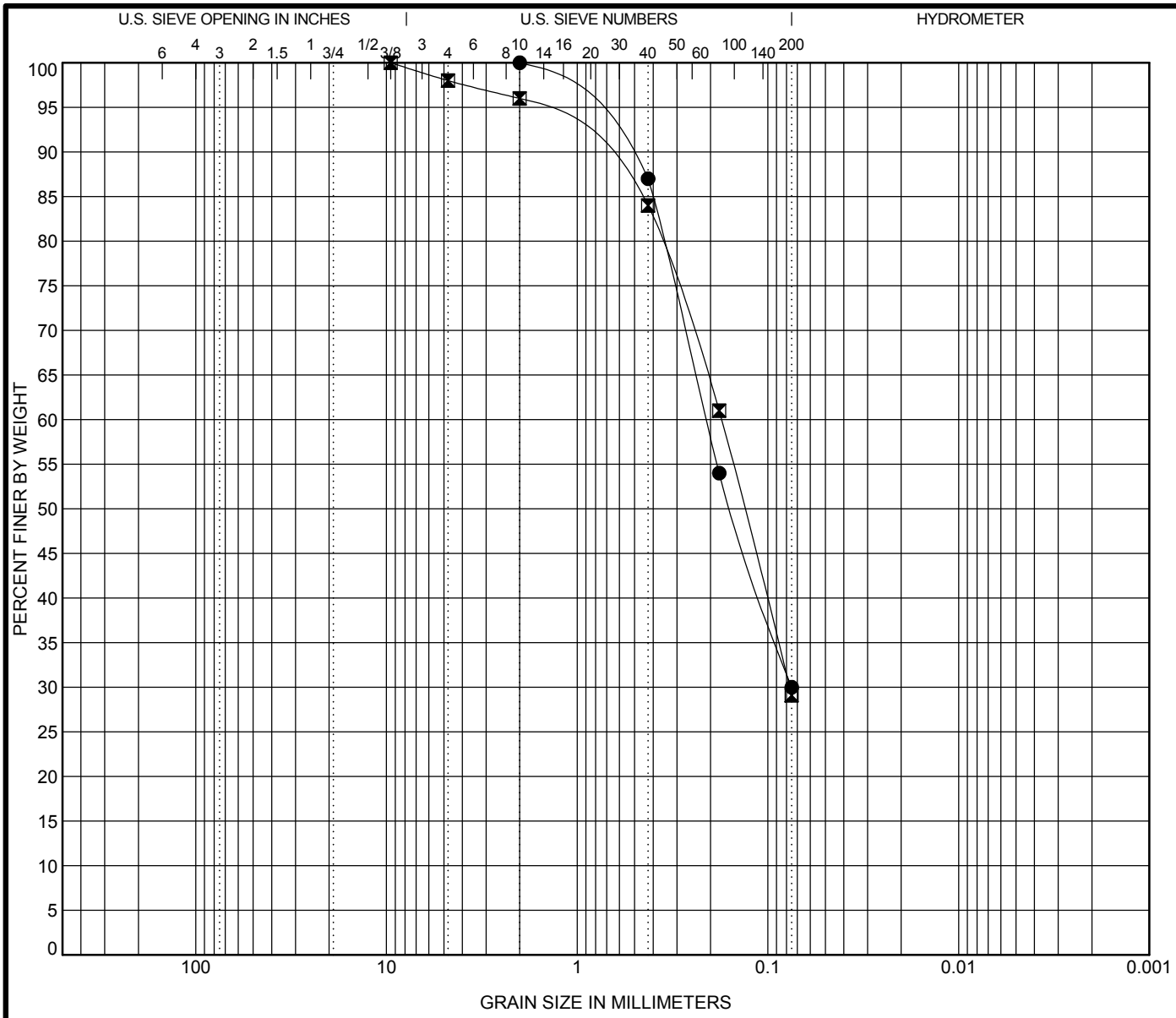

COBBLES	GRAVEL		SAND			SILT OR CLAY
	coarse	fine	coarse	medium	fine	

	Specimen Identification		Classification	LL	PL	PI	Cc	Cu
●	09	2.5	**SILTY SAND(SM)**	**NP**	**NP**	**NP**		
⊠	10	2.5	**SILTY SAND(SM)**	**NP**	**NP**	**NP**		

	Specimen Identification		D100	D60	D30	D10	%Gravel	%Sand	%Silt	%Clay
●	09	2.5	**2**	**0.21**	**0.075**		**0.0**	**70.0**	**30.0**	
⊠	10	2.5	**9.5**	**0.175**	**0.077**		**2.0**	**68.9**	**29.1**	

GEO-TEST

GRAIN SIZE DISTRIBUTION

Project: Rio Rancho Senior Center-Phase 1

Location: Rio Rancho NM

Number: 1-90208

RIO RANCHO SENIOR CENTER

RioRancho City of Vision

CITY OF RIO RANCHO

DEPARTMENT OF PARKS, RECREATION AND COMMUNITY SERVICES

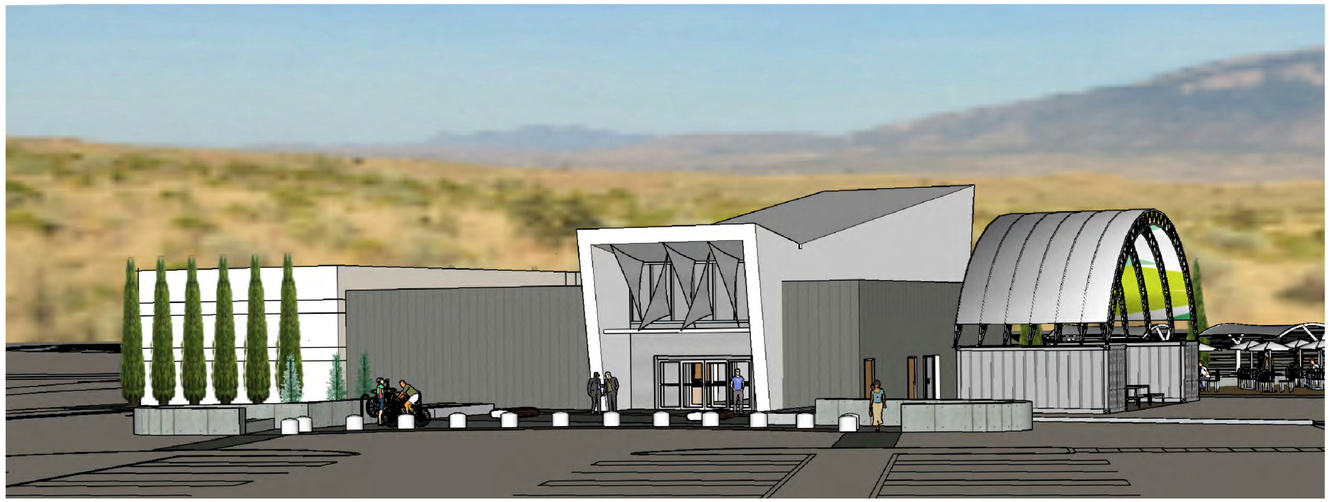

ADD ALTERNATES

ADD ALTERNATE #1: BUILD MULTI–PURPOSE ROOM

ADD ALTERNATE #2: ADD MOVEABLE PARTITION IN MULTI–PURPOSE ROOM

ADD ALTERNATE #3: ADD MOVEABLE PARTITION IN CLASSROOMS

ADD ALTERNATE #4: ADD KITCHEN EQUIPMENT PACKAGE

ADD ALTERNATE #5: not used

ADD ALTERNATE #6: CHANGE DOORS 107.1 AND 109.1 FROM HINGE TO AUTOMATIC SLIDING DOORS

VICINITY MAP

scale: 3" = 1 mile

TRUE NORTH

PROJECT DESCRIPTION

WORK OF THIS CONTRACT CONSISTS OF CONSTRUCTION OF A NEW SENIOR CENTER COMPLEX AT BROADMOOR BOULEVARD, NEW MEXICO 87144 CONSISTING OF:

1. ONE STORY, 7,500 SQUARE FOOT (INC. ADD. ALT. 1) SENIOR CENTER BUILDING.
2. RELATED ACCESS ROAD, PAVING, PARKING LOT, SIDEWALKS, LANDSCAPING, CONCRETE BENCHES AND WALLS, PLANTERS, AND OTHER SITE WORK.
3. ELECTRICAL, WATER, GAS, SEWER, AND OTHER UTILITIES.
4. STORM WATER DRAIN AND DETENTION AREA.

OWNER

CITY OF RIO RANCHO
DEPARTMENT OF PARKS RECREATION AND COMMUNITY SERVICES

ACTING CITY MANAGER:	Peter Wells
DEPARTMENT DIRECTOR:	Connie Peterson
DIVISION MANAGER, SENIOR SERVICES:	Liz Smyth
PROJECT MANAGER:	Dyane Sonier Resource Development Manager 3200 Civic Center Circle NE Rio Rancho, New Mexico 87144 m) (505) 264–1307 e) dsonier@rrnm.gov

OFFICIAL SIGNATURES

CITY OF RIO RANCHO:	DEPARTMENT OF DEVELOPMENT SERVICES ENGINEERING DIVISION	4/14/2020 DATE
CITY OF RIO RANCHO:	DEPARTMENT OF PUBLIC WORKS	4/14/2020 DATE
CITY OF RIO RANCHO:	DEPARTMENT OF UTILITIES	4/14/2020 DATE
CITY OF RIO RANCHO:	DEPARTMENT OF PARKS, RECREATION AND COMMUNITY SERVICES	4/14/2020 DATE

PROPERTY INFORMATION

PROPERTY ADDRESS: 3241 BROADMOOR BOULEVARD
RIO RANCHO, NEW MEXICO 87144

LEGAL DESCRIPTION: Tract 3, as the same is shown and designated on the plat entitled "SUMMARY PLAT, TRACTS 1, 2, AND 3, U.N.M. CAMPUS CENTER, RIO RANCHO, SANDOVAL COUNTY, NEW MEXICO, SEPTEMBER 2010" recorded in the land records of the Sandoval County Clerk on October 25, 2010, in Volume 3, Folio 3256, and Rio Rancho Estates Plat Book 23, Pages 69–72.

ACCESS TO SITE

DRIVING DIRECTIONS:

1) FROM PASEO DEL VOLCAN AND BROADMOOR
2) HEAD NORTH ON BROADMOOR BLVD NE, TURN WEST ONTO PDV BYPASS NE
3) TURN NORTH ONTO CIVIC CENTER CIR NE AND TRAVEL NORTH PAST CITY HALL .13 MI
4) TURN EAST PAST CNM, TRAVEL TO END OF PAVEMENT, CONTINUE EAST ON GRADED DIRT ROAD .16 MI
5) TURN SOUTH, CONTINUE ON GRADED DIRT ROAD .1 MI
6) TURN EAST, CONTINUE ON GRADED DIRT ROAD .2 MI TO ACCESS JOB SITE

PROJECT TEAM

ARCHITECT:	G. Donald Dudley Architect, Ltd. 400 Gold Ave. SW, Suite 850 Albuquerque, New Mexico 87102 (505) 243–8100	STRUCTURAL ENGINEER:	Randall Structural Engineering 2529 Camino Seville SE Albuquerque, New Mexico 87124 (505) 463–0258	MECHANICAL ENGINEER:	EEA Consulting Engineers 4343 Pan American Freeway NE, Suite 239 Albuquerque, New Mexico 87107 Contact: Colin Evans (505) 877–4499	ELECTRICAL ENGINEER:	EEA Consulting Engineers 4343 Pan American Freeway NE, Suite 239 Albuquerque, New Mexico 87107 Contact: Michael Griesel (505) 877–4499
LANDSCAPE ARCHITECT:	Consensus Planning 308 8tghth St. NW Albuquerque, New Mexico 87102 (505) 764–9801	CIVIL ENGINEER:	Miller Engineering Consultants, Inc.. 3500 Comanche NE; Bldg. F Albuquerque, New Mexico 87107 (505) 888–3800	GEOTECHNICAL:	GEO–TEST INC. 8528 Calle Alameda NE Albuquerque, New Mexico 87113 (505) 857–0933	TOPOGRAPHIC SURVEY:	The Survey Office 333 Lomas Ave NE Albuquerque, NM 87102 (505) 998––0306

G. DONALD DUDLEY AIA
ARCHITECT
ARCHITECTURE • INTERIORS • PLANNING
AIA • NCARB • LEED AP
SIMMS TOWER STUDIO 850
400 GOLD AVENUE SW
ALBUQUERQUE, NEW MEXICO 87102
TEL 505.243.8100

STATE OF NEW MEXICO
G. DONALD DUDLEY, JR.
No. 3673
4/13/2020
REGISTERED ARCHITECT

NEW BUILDING FOR:
RIO RANCHO SENIOR CENTER
CITY OF RIO RANCHO NEW MEXICO

MARK	DATE	DESCRIPTION

GDDA PROJECT NO: 18–137
DATE: 4/13/2020
DRAWN BY: gdd/pb
CHECKED BY: gdd/pb
SET NO:
SHEET TITLE: COVER SHEET

G001

GENERAL NOTES

1. All construction shall be performed in accordance with 1) the project construction plans, 2) the project specifications, 3) the current edition of the City of Rio Rancho standard details, 4) the current edition of the NMDOT Standard Specifications for Highway and Bridge Construction, and 5) the New Mexico Standard Specifications for Public Works Construction and details, as prepared by the New Mexico Chapter, American Public Works Association and addendum. In the case of conflicting specifications, the City of Rio Rancho will determine which specification governs.

2. The Contractor agrees to assume the sole and complete responsibility for the job site conditions during the course of construction of the project, including safety of all persons and property. This requirement shall apply continuously and not be limited to normal working hours, and the Contractor shall defend, indemnify and hold the City and Engineer harmless from any and all liability, real or alleged, in connection with the performance of the work on this project, except for liability arising from the sole negligence of the City or Engineer.

3. No modifications to these plans shall be made without the written consent of the City, Engineer, and all approval signatories. The Engineer shall not be responsible for construction methods or techniques or for the prosecution of the work as shown on these plans. The Engineer shall not be held responsible for the acts or omissions of the Contractor, Subcontractors, or other persons performing any work, as shown in the project Contract Documents.

4. A Right-of-Way Use Permit and Traffic Control Plan (TCP) are required for all work performed within the public Right-of-Way. Provisions contained within Chapter 96 of the City of Rio Rancho Municipal Code shall govern. All construction signing, barricading, and channelization devices shall conform to the latest edition of the Manual on Uniform Traffic Control Devices (MUTCD). The Contractor is responsible for the setup and maintenance of all traffic control devices. Any modifications to the approved traffic control plan must by approved by the City prior to any changes being implemented. A Traffic Control Supervisor must be available for the duration of the project 24 hours a day and seven days a week. Access to residents and businesses must be maintained at all times.

5. The Contractor shall designate at least one emergency contact person, and shall provide telephone numbers where this person can be contacted at any time. This information shall be provided to the City's Project Manager.

6. The Contractor is responsible for obtaining all necessary permits from all jurisdictional authorities before the start of construction.

7. All work on this project shall be performed in accordance with applicable federal, state, and local laws, rules and regulations concerning construction safety, health, and environmental protection.

8. Existing site improvements which are damaged or displaced by the Contractor shall be removed and replaced by the Contractor at the Contractor's own expense. The work shall be approved by the City before construction of the repairs. Repairs must be accepted by the City before final payment.

9. The Contractor shall only utilize the designated staging areas for storage of all equipment and materials. The City assumes no responsibility or liability for the Contractor's equipment and material in the staging area. Security shall be the sole responsibility of the Contractor. If no staging area is designated on these plans, an offsite staging area shall be provided by the Contractor at the Contractor's expense, or the Contractor may negotiate with the City to use an onsite area.

10. Unless otherwise noted, all roadway stationing is along the centerline of the roadway right-of-way.

11. Unless otherwise noted, stationing of channels and/or pipes in drainage easements is along the centerline of the channel/pipe.

12. The Contractor shall be responsible for determining, in advance of their construction operations, if overhead utility lines, support structures, poles, guys, etc., are an obstruction to construction operations. If any obstruction is evident, the Contractor shall be responsible for coordinating with the appropriate utility owner to remove or support the utility obstruction. All costs for these requirements are incidental to the Contract.

13. Facilities which are not specifically located with actual vertical and horizontal controls on the construction documents, are shown approximate and in accordance with the best available information provided by various owners of the facilities, and supplemented by visual surface information where appropriate. Accuracy, location, and completeness of this information is the sole responsibility of the Contractor and should be verified, by any means necessary, before the initiation of construction. Should a conflict exist, the Contractor shall notify the City, Engineer, and the City's Project Manager immediately.

14. It is mandatory that a preconstruction meeting be held before commencing construction. The Contractor is responsible for contacting the City's Project Manager to determine the time and location of the preconstruction meeting.

15. At the preconstruction meeting, the Contractor shall submit a detailed construction schedule to the City's Project Manager. The schedule will be updated on a monthly basis and submitted with the monthly invoice.

16. Any work performed without the approval of the City of Rio Rancho and/or all work and materials not in conformance with the specifications is subject to removal and replacement at the Contractor's expense.

17. The Contractor shall contact NM 811 at 1-800-321-2537 for utility spots in accordance with applicable state law.

18. The Contractor shall confine their work to within the construction limits and/or public right-of-way to preserve existing vegetation, landscaping, and private property. Approval of these plans does not give or imply any permission to trespass or work on private property. Permission must be granted in writing by the Owner of that property.

19. It is the sole responsibility of the Contractor to keep the job site free from trash on a daily basis, and all materials will be neatly organized. Trash and/or non-used materials shall not be buried onsite.

20. The Contractor shall park equipment and vehicles so as not to interfere with normal activities of residents, other Contractors, or Emergency Services.

21. The Contractor will provide construction staking utilizing approved construction plans, the appropriate Right-of-Way maps, recorded plats, and City of Rio Rancho standard details. Each revision to the plans shall be recorded in the plan revision block. Plans shall include a location map with legal description(s) and location grid.

22. The Contractor shall maintain an up-to-date and accurate set of Working Record Drawings, redlined drawings, in accordance with the City or Rio Rancho's Development Process Manual (DPM) Chapter II.7. These Working Record Drawings shall reflect all approved changes to the original plans throughout the construction process. At the completion of construction, the Contractor shall submit the Working Record Drawings as outlined in the City or Rio Rancho's DPM Chapter II.7. Also, the Contractor shall ensure that all submittals, permitting, and construction activities are in accordance with the City or Rio Rancho's DPM and applicable ordinances. All costs for these requirements are incidental to the Contract.

23. No work shall be performed in a floodplain without written authorization from the City's Floodplain Manager.

24. Any work performed in a drainage way, channel, arroyo, or floodplain must be protected by the means identified in the Temporary Erosion Control and Sediment plans accepted by the City.

25. Vibration monitoring will be at the Contractor's discretion and incidental to the Contract.

SOILS

1. Unless otherwise specified subgrade soils and structural fill materials shall be compacted to the following percentages of the ASTM D-1557 maximum density.

MATERIALS	PERCENT (%) COMPACTION
STRUCTURAL FILL IN THE BUILDING AREA	95
SUB BASE FOR SLAB SUPPORT	95
MISCELLANEOUS BACKFILL BELOW STRUCTURAL FILL OR ROAD	95
MISCELLANEOUS BACKFILL BELOW UNPAVED, NON-BUILDING AREAS	90
ROAD SUB GRADE	95
SIDEWALK SUB GRADE	95
CURB AND GUTTER SUBGRADE	95
ARROYOS	90

ROADWAY GENERAL NOTES

1. No paving construction activities shall be started until all underground utilities within the roadway are completed, tested, and approved. All water valve boxes and electrical, telephone, television, and sewer manholes in the construction area shall be adjusted to finished grade.

2. All signs, barricades, channelization devices, pavement markings, sign frames and erection of such devices shall conform to the requirements of the "Manual on Uniform Traffic Control Devices for streets and highways" (MUTCD), current edition.

3. All street striping altered or destroyed during construction shall be replaced by the Contractor to match the original conditions (i.e. type, spacing) at the location prior to construction, or as shown in this plan set.

4. Street grades shall be restored by the Contractor to the existing grades unless otherwise directed by the City of Rio Rancho. Smooth transitions shall be made between existing pavement which remains in place and pavement which is replaced. When abutting new pavement to existing, saw cut back existing pavement to a neat, straight line as required to remove any broken or cracked pavement. Refer to standard drawing PS-02.

5. The location of all valves and manholes must be referenced at all times by the Contractor during construction and made accessible daily upon completion of all paving activities.

EROSION CONTROL/ENVIRONMENTAL PROTECTION/STORM WATER POLLUTION PREVENTION PLAN

1. The Contractor shall be responsible for fulfilling all necessary National Pollutant Discharge Elimination System (NPDES) requirements including, but not limited to, obtaining an NPDES permit before construction, filling out the Notice of Intent (NOI) application, and filling out the Notice of Termination (NOT) application. The Contractor shall also be responsible for the implementation of and inspection reports for the Storm Water Pollution Prevention Plan (SWPPP). The Contractor shall submit the SWPPP with the proposed construction staging area and temporary sanitary facilities clearly shown. Any check dams, silt fences, or other Best Management Practices (BMP) that are required in the approved SWPPP shall be included in and are incidental to the SWPPP bid amount.

2. The Contractor is required to keep a current copy of the SWPPP at the construction site or at an easily accessible location so that it can be made available at the time of an onsite inspection or upon request by the EPA; a state, tribal, or local agency approving storm water management plans; the operator of a storm sewer system receiving discharges from the site; or representatives of the U.S. Fish and Wildlife Service (USFWS) or the National Marine Fisheries Service (NMFS).

3. The Contractor shall conform to all City, County, State and Federal dust and erosion control regulations. The Contractor shall prepare and obtain any necessary dust or erosion control permits from the regulatory agencies.

4. The Contractor shall either promptly remove any material excavated within the public Right-of-Way or install BMPs according to NPDES requirements to prevent discharge of excavated material within the public Right-of-Way during a rain or wind event. All costs for these requirements are incidental to the Contract.

5. The Contractor shall implement the approved SWPPP and ensure that no soil erodes from the site into public Right-of-Way or onto private property.

6. The Contractor shall mitigate erosion of temporary or permanent dirt swales by installing BMPs identified in the approved SWPPP in the swales perpendicular to the direction of flow, and at intervals as specified in the SWPPP.

7. Construction areas shall be watered for dust control in compliance with government ordinances. The Contractor shall be responsible for locating and supplying water as required. Watering, as required for construction and dust control, shall be considered incidental to construction and no measurement or payment shall be made therefore.

8. Any areas disturbed by construction and not covered by landscaping or an impervious surface shall be re-vegetated with native grass seeding. When construction activities cease and earth disturbing activities will not resume within 14 days, stabilization measures must be initiated. Unless indicated otherwise on these plans or on the landscaping plan, native grass seeding shall be in accordance with Section 1012 of the New Mexico Standard Specifications for Public Works Construction, APWA NM Chapter, current edition.

9. All waste products from the construction site, including items designated for removal, construction waste, construction equipment waste products (oil, gas, tires, etc.) garbage, grubbing, excess cut material, vegetative debris, etc. shall be appropriately disposed of offsite at no additional cost to the City. It shall be the Contractor's responsibility to obtain permits required to haul or dispose of waste products. It shall be the Contractor's responsibility to ensure that the waste disposal site complies with government regulations regarding the environment, endangered species, and archaeological resources.

10. The Contractor shall be responsible for the cleanup and reporting of spills of hazardous materials associated with the construction site. Hazardous materials include gasoline, diesel fuel, motor oil, solvents, chemicals, paints, etc. which may be a threat to the environment. The Contractor shall report the discovery of past or present spills to the New Mexico Environment Department Emergency Response Team at (505) 827-9329.

11. The Contractor shall comply with all applicable regulations concerning surface and underground water. Contact with surface water by construction equipment and personnel shall be minimized. Equipment maintenance and refueling operations shall be performed in an environmentally safe manner in compliance with government regulations.

12. Where storm inlets are susceptible to inflow of silt or debris from construction activities, protection shall be provided on their upstream side utilizing BMPs according to NPDES requirements. All costs for these requirements are incidental to the Contract.

13. Storm Water Pollution Prevention Plans (SWPPP) and accompanying Federal EPA Administrative Procedures shall meet the City of Rio Rancho guidelines and procedures outlined in the current addition of the New Mexico State Highway and Transportation Department Storm Water Management Guidelines for Construction and Industrial Activities Manual.

14. The Contractor shall provide adequate means for cleaning trucks and/or other equipment of mud before entering public streets. It is the Contractor's responsibility to clean streets and take whatever measures are necessary to ensure that all roads are maintained in a clean, mud and dust-free condition at all times.

15. No work may begin in a an arroyo or other drainage way until authorization has been provided by the U.S. Army Corp. of Engineers and the City of Rio Rancho Flood Plain Manager.

WATER GENERAL NOTES

1. For water connections to existing lines, the Contractor shall notify the City's Project Manager a minimum of 48 hours before the connection.

2. Compression joints may be used on copper service lines. Flared joints shall be used when connecting to plastic lines.

3. Valve boxes shall be brought to surface elevation upon completion of the surface course of pavement. Concrete collars shall be constructed to surface elevations.

4. Flushing of water lines shall be metered and reported to the City's Project Manager on a weekly basis. Preference for disposal is (1) on available land surface or (2) in storm sewers. Disposal methods shall be discussed with the City's Project Manager.

5. Flushing, disinfection and testing of water lines shall be coordinated with the City's Project Manager.

6. It will be the Contractor's sole responsibility to protect and maintain, in service, all existing utilities. The Contractor shall adequately support and protect existing utilities affected by the Contractor's trenching activity. In the event that existing utilities are damaged by the Contractor's operations, the Contractor shall arrange for and coordinate prompt repair by the respective utility and shall bear the cost of the repairs.

7. All water lines must have tracer wire and marker balls per City of Rio Rancho standard drawings.

8. The City of Rio Rancho shall approve material submittals before construction.

9. Before any water line installation, the following conditions will occur:

   a) The water line route will be cleared and grubbed and then graded to plan elevation

   b) The water line will be staked when outside an area with curb and gutter.

10. The City of Rio Rancho Utilities Operations Division shall be the only personnel authorized to operate existing valves, fire hydrants, etc. for construction purposes. All shutoffs must be coordinated with the City's Project Manager seven (7) days before proposed shutoff and shall comply with the accepted shutoff plan.

11. The Contractor is responsible for testing of all lines, including but not limited to, hydrostatic and bacteria testing, disinfecting, and flushing.The Contractor is responsible for the testing of the water line system before acceptance by the City. Testing shall be performed to demonstrate the functionality of the system. All costs for these requirements are incidental to the Contract.

12. For non-hot tap water connections to existing lines, the Contractor shall prepare and submit to the City's Project Manager, for acceptance, a water shutoff plan 48 hours before the connection is to take place.

13. The Contractor shall mark the top of the curb with a "W" for water lines following service installations and before final acceptance.

14. Potability testing shall be collected and delivered by a certified third party tester, approved by the City, to a testing laboratory certified by the New Mexico Environment Department - Drinking Water Bureau.

15. All the backflow assemblies shall be tested at installation, and registered in the city backflow program (fees apply). Submit backflow test reports to waterprograms@rrnm.gov.

WASTEWATER GENERAL NOTES

1. Sewer/Water lines shall be placed in separate trenches at a distance of 15 feet typically or a minimum of 10 feet apart horizontally. The water line shall be placed a minimum of 1.5 feet higher in elevation than the sewer line. At all crossings of water and sewer lines, the water line shall be a minimum of 1.5 feet higher than the sewer line or the sewer line shall be C-900 pressurized pipe.

2. It will be the Contractor's sole responsibility to protect and maintain in service all existing utilities. The Contractor shall adequately support and protect existing utilities affected by the Contractor's trenching activity. In the event that existing utilities are damaged by the Contractor's operations, the Contractor shall arrange for and coordinate with the Project Manager, prompt repair by the respective utility and shall bear the cost of the repairs.

3. The City of Rio Rancho shall approve material submittals before construction

4. Prior to the sewer line installation, the following conditions will occur:

   a) The sewer line route will be cleared and grubbed and then graded to plan elevation

   b) The sewer line will be staked when outside an area with curb and gutter

5. All forcemain sewer lines must have marker balls per the City of Rio Rancho standard drawings. Tracer wire shall be installed if required by the City's Project Manager.

6. The City of Rio Rancho Utilities Operations Division shall be the only personnel authorized to operate existing valves, etc. for construction purposes. All shutoffs must be coordinated with the City's Project Manager seven (7) days before to proposed shutoff and shall comply with the accepted shutoff plan.

7. 30 days following installation and backfill of sewer lines, a deflection test using a hand pulled mandrel shall be performed in the presence of the City's Inspector. All costs for these requirements are incidental to the Contract.

8. Air testing of sewer lines and hydrostatic testing of force mains shall be conducted in the presence of the City's Inspector. All costs for these requirements are incidental to the Contract.

9. All sewer service lines shall be inspected by TV camera and videoed then provided to the City's Inspector for review before acceptance by the City. In the event that the first inspection or subsequent inspections after that do not pass, the Contractor will be required to perform additional inspections of the sewer service lines using a TV camera at the Contractor's expense.

10. Manholes shall meet the City of Rio Rancho standards except that there shall be no ladder rungs installed.

11. The Contractor is responsible for testing of all force main lines, including but not limited to hydrostatic and bacteria testing, disinfecting, and flushing. All costs for these requirements are incidental to the Contract.

12. If bypass pumping is required, then a bypass pumping plan must be submitted to the City's Project Manager, for acceptance, seven (7) days before bypass pumping begins.

13. The Contractor shall mark the top of the curb and pan of the gutter with "S" for sanitary sewer following service installation and before final acceptance.

14. Manholes shall be raised to surface course of pavement. Circular concrete collars shall be constructed to surface elevation.

15. No bricks shall be used to adjust manholes to finished grade.

ADA GENERAL NOTES

1. These drawings provide guidance for compliance with the current public right of way accessibility guidelines (PROWAG). These standards shall apply to all new and altered sidewalks.

2. Surfaces shall be stable, firm, and slip resistant. Sidewalk and curb ramp surfaces shall provide consistent slopes within each section.

3. All street striping altered or destroyed during construction shall be replaced by the Contractor to All broom finishes shall be perpendicular to the direction of pedestrian travel.

4. A vertical change of 1/4 inch (6mm) or less is allowed. if between 1/4 inch and 1/2 inch (6mm and 13mm), then it needs to be beveled 2:1. Changes greater than 1/2 inch shall be ramped.

5. Openings or cracks in sidewalk surfaces shall not exceed 1/2 inch (13mm). Elongated openings should be placed so that the long dimension is perpendicular or diagonal to the dominant direction of travel.

6. The least possible curb ramp slope shall be used. Curb ramps running slope shall not exceed 12:1. Where existing terrain is steep, curb ramps shall not exceed 15 feet in length.

7. Provide a flush transition between curb ramps, sidewalks, gutter, and edge of pavement, free of drainage lip, abrupt grade changes, drop-offs, or any surface irregularities. A 5% (20:1) or flatter transition taper shall be provided from the street to the gutter for curb ramps locations (this may require special treatment of the edge of OGFC) when diagonal (not in line with crosswalks) curb ramps are necessary. A 2% (50:1) transition or "lower landing" shall be provided. The gutter running slope (flow line) shall not exceed 2% measured along the bottom of the curb ramp.

8. Curb ramps shall be located to provide the most direct route of travel across the traffic lanes.

9. Two directional (in line with the crosswalks) curb ramps per corner are used in order to provide short and direct crossings for the user.

10. Sign posts, utility poles, fire hydrants, traffic signals standards, light poles, pull boxes, meters, valves, etc., shall not be located in the curb ramp including side flares and landings.

11. In order to better accommodate conditions in the field, the contractor shall obtain final approval of curb ramp locations from the project manager and the city manager and the city traffic engineer. When necessitated by existing physical conditions. Alternate curb ramps must be submitted to the project manager for approval by the city traffic engineer.

12. Landings shall be a minimum of 48" x 48". Slopes shall not exceed 2% (50:1) in all directions.

13. Detectable warnings are required at all street intersections, signalized driveways, commercial driveways 30' wide or greater, and marked mid-block crosswalks.

14. Concrete Procedural note: Before scheduling delivery of concrete, contractor shall meet with City Inspector/PM to ensure the concrete formwork is constructed to dimensions and grades shown on plans and meets PROWAG, 2011 Technical Design Criteria. Calibrate 24" electronic digital level with Contractor's electronic digital level prior to verifying measurements. Verify measurements meet requirements or require correction of all discrepancies before scheduling of concrete to ensure the finished concrete will meet PROWAG. When all measurements meet requirements then the inspector shall permit concrete pour. Repeat the procedure after concrete pour to ensure the curb ramp meets PROWAG compliance. Final acceptance of a curb ramp does not occur until the final inspection of the project. This procedure shall be considered incidental to the installation of the ADA curb ramps.

15. The contractor shall submit a proposed work plan for pedestrian improvements to the project engineer for review and approval prior to initiating this work. This plan shall include the method proposed to maintain pedestrian access to businesses, schools, hospitals, buildings, etc. throughout the pedestrian improvements construction in particular. The contractor, at minimum, shall maintain a 48" clear path for pedestrians so as to meet ADA accessibility requirements. All temporary pedestrian facilities implemented during construction shall comply with ADA standards.

16. Sidewalk and curb ramp cross slope is recommended to be constructed for a cross slope of 1.5% typical, but shall not exceed 2.0% cross slope on the pedestrian access route.

G. DONALD DUDLEY AIA
ARCHITECT
ARCHITECTURE • INTERIORS • PLANNING
AIA • NCARB • LEED AP
SIMMS TOWER STUDIO 850
400 GOLD AVENUE SW
ALBUQUERQUE, NEW MEXICO 87102
TEL 505.243.8100

STATE OF NEW MEXICO
G. DONALD DUDLEY, JR.
No. 3673
4/13/2020
REGISTERED ARCHITECT

NEW BUILDING FOR:
RIO RANCHO SENIOR CENTER
CITY OF RIO RANCHO NEW MEXICO

MARK	DATE	DESCRIPTION

GDDA PROJECT NO: 18-137
DATE: 4/13/2020
DRAWN BY: gdd/pb
CHECKED BY: gdd/pb
SET NO:
SHEET TITLE: GENERAL PROJECT NOTES

G002

ABBREVIATIONS

ABOVE FINISHED FLOOR	A.F.F
ACCESS FLOOR	AC. FLR
ACOUSTICAL	ACOUS.
ACTIVITIES	ACT.
AGGREGATE	AGG.
ALUMINUM	AL.
ANCHOR, ANCHORAGE	ANC.
ARCHITECT(URAL)	ARCH.
ASBESTOS CONTAINING MATERIAL	A.C.M
BEARING	BRG.
BELOW FINISHED FLOOR	B.F.F
BENCHMARK	B.M
BOARD	BD.
BOTTOM	BOT.
BUILDING	BLDG.
CARPET	CARP.
CAST IRON	C.I
CEILING	CLG.
CERAMIC	CER.
COLUMN	COL.
CONCRETE	CONC.
COLORED CONCRETE	CCONC.
CONCRETE MASONRY UNIT	CMU
CONSTRUCTION	CONST.
CONTINUOUS OR CONTINUE	CONT.
CONTROL JOINT	C.J.
CORRIDOR	CORR.
DETAIL	DTL.
DIAMETER	DIA.
DIMENSION	DIM.
DOWN	DN.
DRINKING FOUNTAIN	D.F.
DOWNSPOUT	D.S.
EACH WAY	E.W.
ELEECTIC(AL)	ELEC.
ELECTRIC WATER COOLER	E.W.C
ELEVATION	EL. OR EVEV.
EXISTING	EXIST OR (E)
EXPIATION JOINT	E.J.
EXPOSED	EXP.
EXTERIOR	EXT.
EXTERIOR INSULATION& FINISH SYSTEM	E.I.F.S.
FIELD VERIFY	F.S
FINISH(ED)	FV.
FINISHED FLOOR	FIN.
FIRE EXTINGUISHER	F.F.
FIRE EXTINGUISHER (CABINET)	F.E.
FLOOR(ING)	F.E.C
FLOOR DRAIN	FLR.
FOAM-BOARD JOINT	F.D.
FOOTING	F.B.J.
GALVANIZED	F.T.G.
GALVANIZED IRON	GALV.
GAUGE	G.I.
GENERAL CONTRACT(OR)	GA.
GLASS, GLAZING	G.C.
GLAZED CONCRETE MASONRY UNIT	GL.
GYPSUM	G.C.M.U.
GYPSUM WALL BOARD	GYP.
HARDWARE	G.W.N
HARDWOOD	H.W.
HEATING/VENTILATION/ AIR CONDITIONING	HWD.
HOLLOW CORE	H.V.A.C.
HOLLOW METAL	H.C.
HORIZONTAL	H.M.
HOSE BIB	HORIZ.
INSIDE DIAMETER	H.B.
INSULATION	I.D.
INTERIOR	INSUL.
	INT.

JOINT	JT.
KNOCKOUT	K.O.
KNOCKOUT BOND BEAM	K.O.B.B.
LAMINATE(D)	LAM.
LAVATORY	LAV.
LEAD-BASED PAINT	L.B.P.
LINEAR METAL	LM.
LOUVER	LVR.
MANUFACTURE(R)	MFR.
MASONRY	MAS.
MASONRY OPENING	M.O.
MATERIAL(S)	MATL.
MAXIMUM	MAX.
MECHANICAL	MECH.
METAL	MTL.
METAL THRESHOLD	M.T.
MILLIMETERS	mm
MINIMUM	MIN
MISCELLANEOUS	MISC.
MOUNTED	MTD.
NEWTONS	N
NOMINAL	NOM.
NOT IN CONTRACT	N.I.C.
NOT TO SCALE	N.T.S.
ON CENTER	O.C.
OPPOSITE	OPP
OPPOSITE HAND	O.H.
OUTSIDE DIAMETER	O.D.
OWNER FURNISH	O.F.
CONTRACTOR INSTALL	O.F.C.I.
PLASTER	PLAS.
PLATE	PL.
PLYWOOD	PWD.
POINT	PT.
POLYVINYL CHLORIDE	PVC
PORCELAIN TILE	P.TILE
POUNDS PER CUBIC FOOT	PCF
POUNDS PER LINEAR FOOT	PLF
POUNDS PER SQUARE FOOT	PSF
POUNDS PER SQUARE INCH	PSI
QUARRY TILE	QT
REFERENCE	REF.
REQUIRE(D)	REQ(D)
RETURN AIR	R.A
RIGHT OF WAY	R.O.W.
ROOF DRAIN	R.D.
ROOF DRAIN LEADER	R.D.L.
ROUGH OPENING	R.O.
SECTION	SECT.
SERVICE SINK	S.S.
SHEATHING	SHTG.
SIMILAR	SIM.
SOLID CORE	S.C.
SPECIFICATION(S)	SPEC.
SQUARE	SQ.
STAINLESS STEEL	SST.
STEEL	STL.
STRUCTURAL	STRUCT.
SUSPENDED	SUS.P
SYNTHETIC	SYN
TONGUE AND GROVE	T&G
TOP OF DECK	T.O.D.
TOP OF FILL	T.O.F.
TOP OF MASONRY	T.O.M.
TOP OF ROOF	T.O.R.
TOP OF STRUCTURE	T.O.S.
TOP OF WALL	T.O.W.
TYPICAL	TYP.
UNLESS OTHERWISE NOTED	U.O.N.
VINYL COMPOSITION TILE	V.C.T.
VINYL WALL COVERING	V.W.C
VERTICAL	VERT.
WATER CLOSET	W.C.
WATER HEATER	W.H.
WELDED WIRE FABRIC	W.W.F.
WITH	W/

SYMBOLS LEGEND

XX / XXX	INTERIOR ELEVATION
100	DOOR NUMBER
ENTRY	ROOM NAME
001	ROOM NUMBER
33	KEYNOTE
XX / XXX	EXTERIOR ELEVATION
1 / A401	SECTION OR DETAIL CALL-OUT
XX / XXX	BUILDING SECTION
XX / XXX	WALL OR DETAIL SECTION
XX	FRAME OR WINDOW TYPE
X	PARTITION / WALL TYPE
112'-4" / T.O.PARAPET	CONTROL OR DATA ELEVATION
A	TOILET ROOM ACCESSORY
1	EQUIPMENT TAG
CPT VCT	EDGE OF FLOOR FINISH
FC	STUCCO COLOR, SEE SPECS.

INDEX TO DRAWINGS

(* INDICATES DRAWING INCLUDED FOR REFERENCE ONLY)

GENERAL

G001	COVER
G002	GENERAL PROJECT NOTES
G101	INDEX TO DRAWINGS AND SYMBOLS
G102	CODE ANALYSIS & LIFE SAFETY PLAN
G103	TOPOGRAPHIC SURVEY *
G104	LAND LEASE EXHIBIT *
G105	SURVEY PLAT *
G106	TURNOUT DRAWING *

CIVIL

CG100	GENERAL NOTES
C101	GRADING AND DRAINAGE PLAN
C102	SITE UTILITY PLAN
C501	MISCELLANEOUS DETAILS
C502	MISCELLANEOUS DETAILS
C503	MISCELLANEOUS DETAILS

ARCHITECTURAL SITE PLANS

AS101	OVERALL SITE PLAN
AS201	ENLARGED SITE PAN & DETAILS
AS202	ENLARGED SITE PLAN
AS203	ENLARGED SITE PLAN

LANDSCAPE

L101	IRRIGATION PLAN
L201	PLANTING PLAN
L501	LANDSCAPE DETAILS

STRUCTURAL

S001	GENERAL STRUCTURAL NOTES
S101	FOUNDATION PLAN
S201	FRAMING PLAN
S301	FOUNDATION DETAILS
S401	FRAMING DETAILS

ARCHITECTURAL PLANS

A101	FLOOR PLAN – BASE BID
A102	FLOOR PLAN – ADD ALTERNATE #1
A103	ROOF PLAN
A111	REFLECTED CEILING PLANS

ARCHITECTURAL ELEVATIONS

A201	BUILDING ELEVATIONS – BASE BID
A202	BUILDING ELEVATIONS – ADD ALTERNATE #1

ARCHITECTURAL SECTIONS

A301	BUILDING SECTIONS – BASE BID
A302	BUILDING SECTIONS
A303	BUILDING SECTIONS – ADD ALTERNATE #1

ARCHITECTURAL WALL SECTIONS

A310	WALL SECTIONS
A311	WALL SECTIONS
A312	WALL SECTIONS
A313	WALL SECTIONS
A314	WALL SECTIONS
A315	WALL SECTIONS

ARCHITECTURAL ENLARGED PLANS + INT ELEVATIONS

A401	INTERIOR ELEVATIONS
A450	ENLARGED TOILETS + ELEVATIONS
A451	ENLARGED TOILETS + ELEVATIONS

ARCHITECTURAL WALL TYPES

A501	WALL TYPES

ARCHITECTURAL DETAILS

A502	DETAILS
A503	DETAILS
A504	DETAILS
A510	DOOR & WINDOW DETAILS
A511	PLAN DETAILS; DOOR & WINDOW DETAILS

ARCHITECTURAL SCHEDULES

A601	DOOR SCHEDULE & WINDOW SCHEDULE
A602	ROOM FINISH SCHEDULE

CASEWORK

A901	ARCHITECTURAL CASEWORK

KITCHEN EQUIPMENT

Q101	KITCHEN EQUIPMENT PLAN AND SCHEDULE

MECHANICAL / PLUMBING

M001	MECHANICAL LEGEND & SPECIFICATIONS
M101	MECHANICAL ROOF AND FLOOR PLAN – BASE BID
M102	MECHANICAL ROOF AND FLOOR PLAN – ADD ALTERNATE #1
M501	MECHANICAL DIAGRAMS
M601	MECHANICAL SCHEDULES
P001	PLUMBING LEGEND & SPECIFICATIONS
P101	PLUMBING WASTE & VENT & WATER & GAS PLANS – BASE BID
P102	PLUMBING WASTE & VENT & WATER & GAS PLANS – ADD ALTERNATE #1
P103	PLUMBING ROOF PLANS
P401	PLUMBING WASTE & VENT RISER DIAGRAMS
P501	PLUMBING DIAGRAMS
P502	PLUMBING DIAGRAMS
P601	PLUMBING SCHEDULES
FP001	FIRE PROTECTION LEGEND & SPECIFICATIONS
FP101	FIRE PROTECTION PLANS

ELECTRICAL

E001	ELECTRICAL LEGEND AND SPECIFICATIONS
ES101	ELECTRICAL SITE PLAN
EL111	ELECTRICAL LIGHTING PLAN
EP101	ELECTRICAL POWER PLAN
E102	ELECTRICAL ROOF PLAN
E601	ELECTRICAL DIAGRAMS
E701	ELECTRICAL SCHEDULES
E702	ELECTRICAL SCHEDULES

G. DONALD DUDLEY AIA
ARCHITECT
ARCHITECTURE • INTERIORS • PLANNING
AIA • NCARB • LEED AP
SIMMS TOWER STUDIO 850
400 GOLD AVENUE SW
ALBUQUERQUE, NEW MEXICO
87102
TEL 505.243.8100

STATE OF NEW MEXICO
G. DONALD DUDLEY, JR.
No. 3673
4/13/2020
REGISTERED ARCHITECT

NEW BUILDING FOR:
RIO RANCHO SENIOR CENTER
CITY OF RIO RANCHO NEW MEXICO

MARK	DATE	DESCRIPTION

GDDA PROJECT NO: 18-137
DATE: 4/13/2020
DRAWN BY: gdd/pb
CHECKED BY: gdd/pb
SET NO:
SHEET TITLE: DRAWING INDEX

G101

SYMBOLS LEGEND

OFFICE 193 / 100 / 2 / 1

- APPROX. FLOOR AREA OF ROOM OR AREA
- OCCUPANT LOAD FACTOR (SQUARE FEET) § Table 10-A
- CALCULATED OCCUPANT LOAD
- NUMBER OF EXITS REQUIRED § Table 10-A

180 / 79 D / 36"
- EGRESS CAPACITY OF DOOR AT 0.15"/PERSON § 1005.3.1, Exception 1
- CALCULATED NUMBER OF PERSONS USING THIS DOOR
- WIDTH OF DOOR (IN INCHES)

PHASES 1 & 2 PLUMBING FIXTURE REQUIREMENTS

PER IBC TABLE 2902.1

GROUP	WATER CLOSETS		URINALS	LAVATORIES MALE/FEMALE	DRINKING FOUNTAINS	SERVICE SINK	UNISEX TOILET
(328) OCCUPANTS							
A-3 (243)	1 PER 125 122 MALE	1 PER 65 122 FEMALE		1 PER 200	1 PER 500	1	1 IF OVER 6 WC
REQUIRED	1	2		.7M/.7F	.3	1	0
E (83)	1/50 42 MALE	1/50 42 FEMALE		1 PER 50	1 PER 100		
REQUIRED	1	1		1 M/1 F	.2		
COMBINED REQUIRED	1 * 2	3	1	2M/2F	1	1	0
COMBINED PROVIDED	3	3	1	2M/2F	1	1	0**

*67% rule per IPC 419.2
**DOES NOT CONTRIBUTE TO FIXT. COUNT

APPLICABLE CODES

- UNIFORM MECHANICAL CODE 2012
- NEW MEXICO PLUMBING CODE; INCLUDING APPENDIX CHAPTERS A,B,D,E,F,I, AND L 2012
- NEW MEXICO COMMERCIAL BUILDING CODE INCLUDING APPENDIX CHAPTERS E & I, BUT NOT INCLUDING APPENDIX CHAPTERS A,B,C,D,F,G,H,J, AND K 2015
- NEW MEXICO ELECTRICAL CODE 2014
- INTERNATIONAL BUILDING CODE 2015
- INTERNATIONAL FIRE CODE 2015
- NATIONAL FIRE PROTECTION CODE 72 – 2013
- UNIFORM MECHANICAL CODE (IAPMO) 2012
- UNIFORM PLUMBING CODE (IAPMO) 2012
- NATIONAL ELECTRICAL CODE 2014
- NEW MEXICO ENERGY CONSERVATION CODE, 2009
- ICC/ANSI 117.1.2003
- CITY OF RIO RANCHO MUNICIPAL CODE

FIRE EXTINGUISHERS per § table 906.3(1) INTERNATIONAL FIRE CODE

	LIGHT (LOW) HAZARD OCCUPANCY
MINIMUM RATED SINGLE EXTINGUISHER:	2-A
MAXIMUM FLOOR AREA PER UNIT OF A:	3,000 SQUARE FEET
MAXIMUM FLOOR AREA FOR EXTINGUISHER:	11,250 SQUARE FEET
MAXIMUM TRAVEL DISTANCE TO EXTINGUISHER:	75 FEET
KITCHEN FIRE EXTINGUISHER:	CLASS K

	Symbol
SEE FLOOR PLAN THIS SHEET FOR SURFACE AND SEMI-RECESSED FIRE EXTINGUISHER CABINET LOCATIONS	FE
NOTE: FIRE EXTINGUISHERS N.I.C., PROVIDED BY OWNER	
AUTOMATED EXTERNAL DEFIBRILLATOR IN SEMI-RECESSED WALL CABINET	AED

FIRE ALARM AND SPRINKLER SYSTEM

A. FIRE SPRINKLER SYSTEM SHALL BE SUPERVISED AND MONITORED.

B. FIRE ALARM CONTRACTOR SHALL SUBMIT SHOP DRAWINGS FOR REVIEW AND APPROVAL.

C. SHOP DRAWINGS FOR FIRE ALARM SYSTEM SHALL BE SUBMITTED TO FIRE MARSHAL'S OFFICE PRIOR TO ALTERATION OR MODIFICATIONS.

PARKING REQUIREMENTS

GROSS FLOOR AREA OF MAIN GATHERING AREAS: 3,960 S.F. § 154.76 (A)(1)
PARKING CALCULATION: 3,960÷40=99
FLOOR AREA OF OFFICE AND PUBLIC BUILDING SPACES: 1,500 S.F. § 154.76 (A)(1)
PARKING CALCULATION: 1,500÷300=5

TOTAL SPACES REQUIRED: 104 § 154.76 (A)(1)
TOTAL SPACES PROVIDED: 104

TOTAL ACCESSIBLE SPACES REQUIRED: 8 § 154.76 (E)(2)(a)
TOTAL ACCESSIBLE SPACES PROVIDED: 26

TOTAL VAN SPACES REQUIRED: 2 § 154.76 (E)(2)(a)
TOTAL VAN SPACES PROVIDED: 2

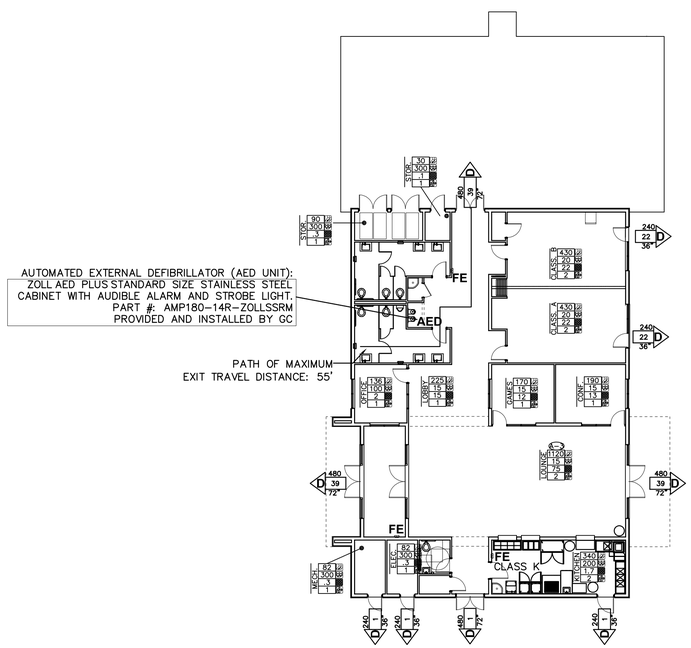

A1 LIFE SAFETY PLAN – BASE BID
1/16"=1'-0"

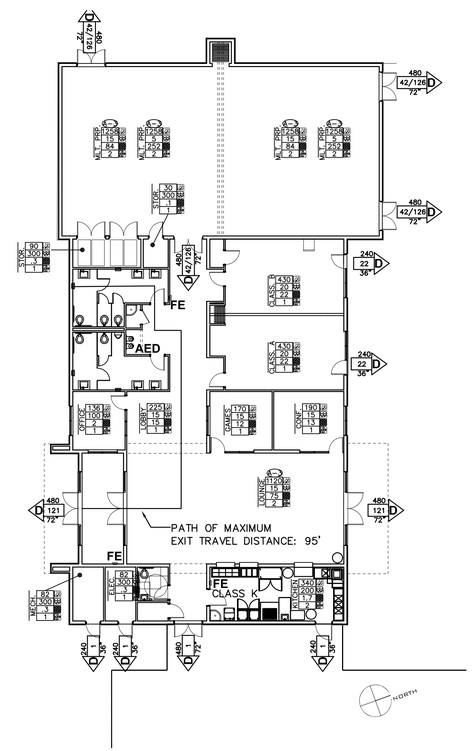

A1 LIFE SAFETY PLAN – ADD ALT #1
1/16"=1'-0"

NOTE: THE MULTI-PURPOSE ROOM IS TO BE DIVIDED BY A MOVABLE PARTITION. OCCUPANCY CALCULATIONS FOR EACH HALF OF THE MULTI-PURPOSE ROOM (ASSEMBLY WITHOUT FIXED SEATS) ARE GIVEN FOR BOTH "STANDING SPACE" (5 NET S.F./OCCUPANT) AND "UNCONCENTRATED (TABLES AND CHAIRS)" (15 NET S.F./OCCUPANT). PER INSTRUCTION BY J.J. GARCIA, CITY OF RIO RANCHO FIRE MARSHAL ON 12/13/2019.

CODE INFORMATION, PHASES 1 & 2

Project Type: New Day Use Senior Center

Zoning: .

Occupancy Group: A-3 & B §303.1 AND 304.1

Construction Type: TYPE II-B per § 602
(Automatic Sprinkler Protection)

Allowable Floor Area and Building Height: A-3 II-B
9,500 * §Table 503 — Allowable before 504 and 506 Area and Height Increase
2 Story

Section 504 Building Height: 504.2 Automatic Sprinkler Increase

Allowable Building Height: Building Height Increase by 20'-0", Max. 3 Stories

Actual Height: 1 Story (Actual) ok

Section 506 Building Area Modifications: 506.1 General (Building Area Increase)
Aa={[At + [At x If] + [At x Is]} § Equation 5-1
Aa={[9,500 + [9,500 x .75] + [9,500 x 3]}
Aa={[9,500 + [7,125] + [28,500]}

Allowable Area with Modifications: Aa=**45,125 sf** (Allowable Building Area- One Story)

506.2 Frontage Increase:: If=[F/P – .25] W/30 § Equation 5-2
If = [1139'/1139' – .25] 30/30
If = .75

506.3 Automatic Sprinkler Increase: No more than One story above Grade Plane
Is = 3

Building Area: 7,500 * (Actual) ok

Allowable Height: 3 Story (Allowable) § Table 503 (504.2 Automatic sprinkler system increase by one story maximum.)

Actual Height: 1 Story (Actual) ok

Area Separation Required: NONE

Closest Distance to Assumed PL: 31'-6"

Fire Resistant Construction Required: 0 Hour — 10 ≤ X ≤ 30; Type IIB; Group A § Table 602

Classification of Opening Protected: Greater than 20' to 25' — No Limit § Table 704.8

Total Number of Exits Required: 3 § Table 1019.1
Total Number of Exits Provided: 9

Maximum Travel Distance Permitted: 250' per § table 1016.1 (with sprinkler system)
Maximum Travel Distance Provided: 95'

Maximum Dead End Corridor Permitted: 50' per § 1020.4 Exception 2 (with sprinkler system)
Maximum Travel Distance Provided: 46'-6"

Flame Spread

All interior ceiling materials (including linear wood and acoustical clouds) shall meet ASTM E 84 Class C: Flame Spread 76-200; smoke developed 0-450 per IBC Table 803.5.

G. DONALD DUDLEY AIA
ARCHITECT
ARCHITECTURE • INTERIORS • PLANNING
AIA • NCARB • LEED AP
SIMMS TOWER STUDIO 850
400 GOLD AVENUE SW
ALBUQUERQUE, NEW MEXICO 87102
TEL 505.243.8100

STATE OF NEW MEXICO — G. DONALD DUDLEY, JR. — No. 3673 — 4/13/2020 — REGISTERED ARCHITECT

NEW BUILDING FOR:
RIO RANCHO SENIOR CENTER
CITY OF RIO RANCHO NEW MEXICO

MARK	DATE	DESCRIPTION

GDDA PROJECT NO: 18-137
DATE: 4/13/2020
DRAWN BY: gdd/pb
CHECKED BY: gdd/pb
SET NO:
SHEET TITLE: CODE ANALYSIS LIFE SAFETY PLAN

G102

GENERAL NOTES:

1: CONTOUR INTERVAL IS ONE (1) FOOT.

2: ELEVATIONS ARE BASED ON STATION No. "CITY CENTER", HAVING AN ELEVATION OF 5619.61, NAVD 1988

3: UTILITIES SHOWN HEREON ARE IN THEIR APPROXIMATE LOCATION BASED ONLY ON ABOVE GROUND EVIDENCE FOUND IN THE FIELD AND AS-BUILT INFORMATION PROVIDED BY THE CLIENT. UTITLITIES SHOWN HEREON, WHETHER INDICATED AS ABANDONED OR NOT, SHALL BE VERIFIED BY OTHERS FOR EXACT LOCATION AND/OR DEPTH PRIOR TO EXCAVATION OR DESIGN CONSIDERATIONS.

4: THIS IS **NOT** A BOUNDARY SURVEY. APPARENT PROPERTY CORNERS AND PROPERTY LINES ARE SHOWN FOR INFORMATION ONLY. BOUNDARY DATA SHOWN IS FROM PREVIOUS SURVEY REFERENCE HEREON.

PLAT OF TOPOGRAPHY
OF
PORTION OF TRACT 3
U.N.M. CAMPUS CENTER
CITY OF RIO RANCHO, SANDOVAL COUNTY, NEW MEXICO
FEBRUARY 2020

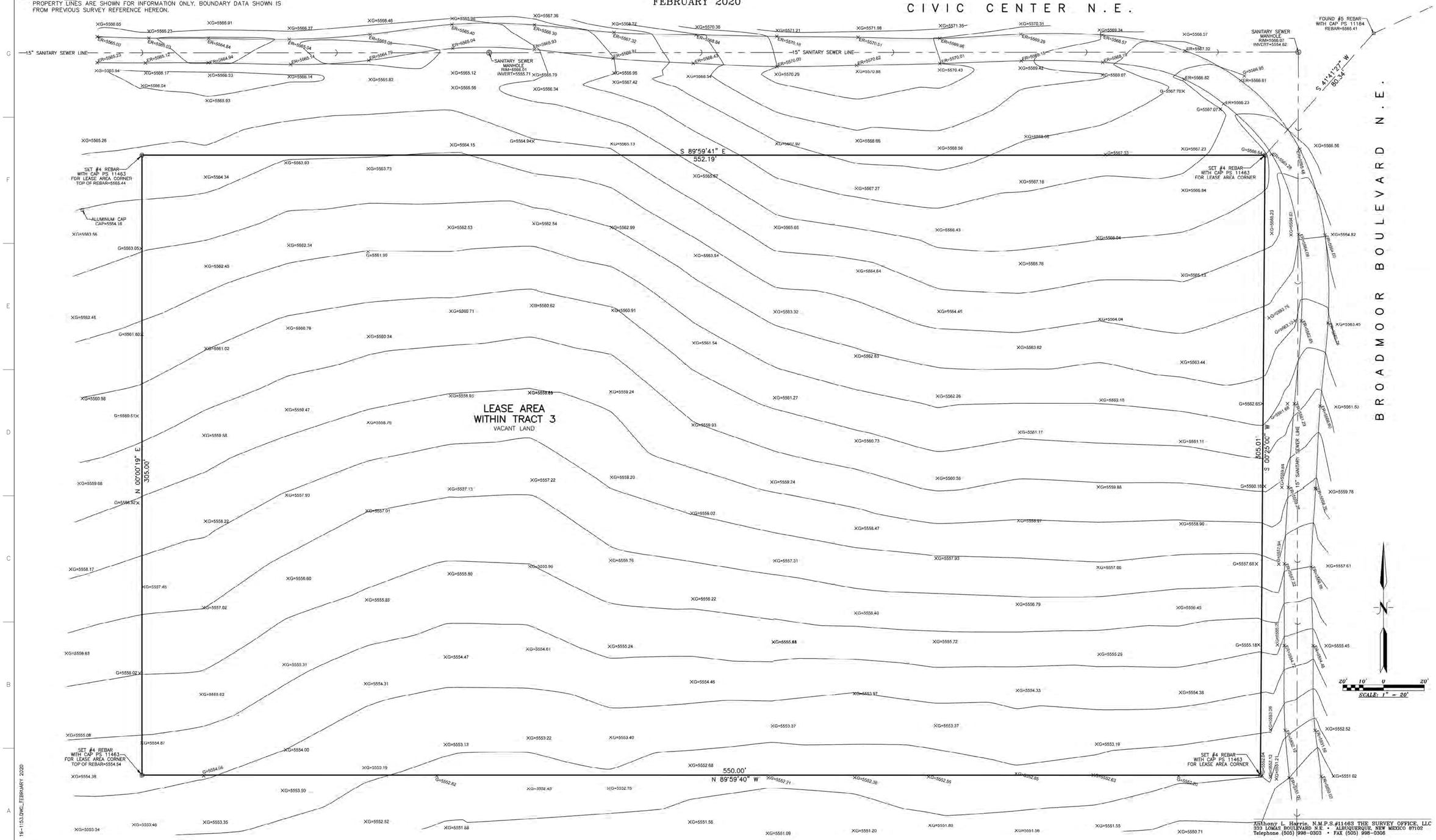

Anthony L. Harris, N.M.P.S.#11463 THE SURVEY OFFICE, LLC
339 LOMAS BOULEVARD N.E. • ALBUQUERQUE, NEW MEXICO 87102
Telephone (505) 998-0303 • FAX (505) 998-0306

19-1153.DWG_FEBRUARY 2020

SIMMS TOWER STUDIO 850
400 GOLD AVENUE SW
ALBUQUERQUE, NEW MEXICO
87102
TEL 505.243.8100

G. DONALD DUDLEY AIA
ARCHITECT
ARCHITECTURE • INTERIORS • PLANNING
AIA • NCARB • LEED AP

THIS SHEET INCLUDED FOR REFERENCE ONLY

NEW BUILDING FOR:
RIO RANCHO SENIOR CENTER
CITY OF RIO RANCHO NEW MEXICO

MARK	DATE	DESCRIPTION

GDDA PROJECT NO: 18-137

DATE: 4/13/2020

SET NO:

SHEET TITLE: TOPOGRAPHIC SURVEY

G103

EXHIBIT SHOWING
LEASE AREA
WITHIN
TRACT 3, U.N.M. CAMPUS CENTER
CITY OF RIO RANCHO, SANDOVAL COUNTY, NEW MEXICO
DECEMBER 2019

A CERTAIN TRACT OF LAND BEING A LEASE AREA LOCATED WITHIN THE SOUTHEASTERLY PORTION OF TRACT NUMBERED THREE (3) OF THE SUMMARY PLAT OF TRACTS 1, 2 AND 3, U.N.M. CAMPUS CENTER, RIO RANCHO, SANDOVAL COUNTY, NEW MEXICO, AS THE SAME IS SHOWN AND DESIGNATED ON THE PLAT THEREOF, FILED IN THE OFFICE OF THE COUNTY CLERK OF SANDOVAL COUNTY, NEW MEXICO ON JUNE 17, 2010 IN RIO RANCHO PLAT BOOK NO. 23, PAGE 69, SAID LEASE AREA BEING MORE PARTICULARLY DESCRIBED AS FOLLOWS: BEGINNING AT THE SOUTHEAST CORNER OF THE HEREIN DESCRIBED LEASE AREA, BEING A POINT ON THE WESTERLY LINE OF BROADMOOR BOULEVARD, WHENCE THE SOUTHEAST CORNER OF SAID TRACT 3 BEARS S. 02 DEG. 40' 13" E., A DISTANCE OF 984.02 FEET RUNNING THENCE N. 89 DEG. 59' 44" W., A DISTANCE OF 550.00 FEET TO THE SOUTHWEST CORNER; THENCE N. 00 DEG. 25' 02" E., A DISTANCE OF 305.00 FEET TO THE NORTHWEST CORNER, BEING A POINT ON THE SOUTHERLY LINE OF NO NAME ROAD; THENCE S. 89 DEG. 59' 44" E., ALONG THE SOUTHERLY LINE OF NO NAME ROAD, A DISTANCE OF 550.00 FEET TO THE NORTHEAST CORNER, BEING THE INTERSECTION OF THE SOUTHERLY LINE OF NO NAME ROAD WITH THE WESTERLY LINE OF BROADMOOR BOULEVARD; THENCE S. 00 DEG. 25' 02" W., ALONG THE WESTERLY LINE OF BROADMOOR BOULEVARD, A DISTANCE OF 305.00 FEET TO THE SOUTHEAST CORNER AND PLACE OF BEGINNING CONTAINING 3.8509 ACRES MORE OR LESS.

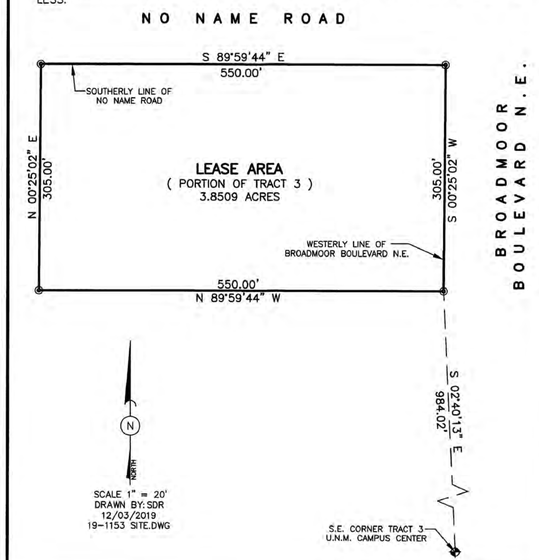

G. DONALD DUDLEY AIA
ARCHITECT
ARCHITECTURE • INTERIORS • PLANNING
AIA • NCARB • LEED AP
SIMMS TOWER STUDIO 850
400 GOLD AVENUE SW
ALBUQUERQUE, NEW MEXICO
87102
TEL 505.243.8100

THIS SHEET INCLUDED FOR REFERENCE ONLY

NEW BUILDING FOR:
RIO RANCHO
SENIOR CENTER
CITY OF RIO RANCHO
NEW MEXICO

MARK	DATE	DESCRIPTION

GDDA PROJECT NO: 18-137

DATE: 4/13/2020

SET NO:

SHEET TITLE:
LAND LEASE
EXHIBIT

G104

CURVE TABLE					
CURVE NO.	LENGTH	RADIUS	DELTA	CHORD	CHORD BEARING
C1	193.79'	476.75'	23°17'21"	192.46'	S78°47'09"W
C2	193.77'	479.26'	23°09'57"	192.46'	S55°33'31"W
C3	54.23'	134.00'	23°11'15"	53.86'	S55°35'36"W
C4	32.92'	166.00'	11°21'50"	32.87'	S61°23'12"W
C5	157.27'	410.00'	21°58'41"	156.31'	S66°47'20"W
C6	131.59'	125.66'	60°00'00"	125.66'	S50°30'55"W
C7	115.24'	328.50'	20°05'59"	114.65'	S10°27'57"W
C8	49.69'	649.99'	4°22'49"	49.68'	N75°18'12"E
C11	539.02'	650.00'	47°30'48"	523.71'	S65°25'02"W
C12	31.56'	20.00'	90°24'46"	28.39'	N44°47'21"W

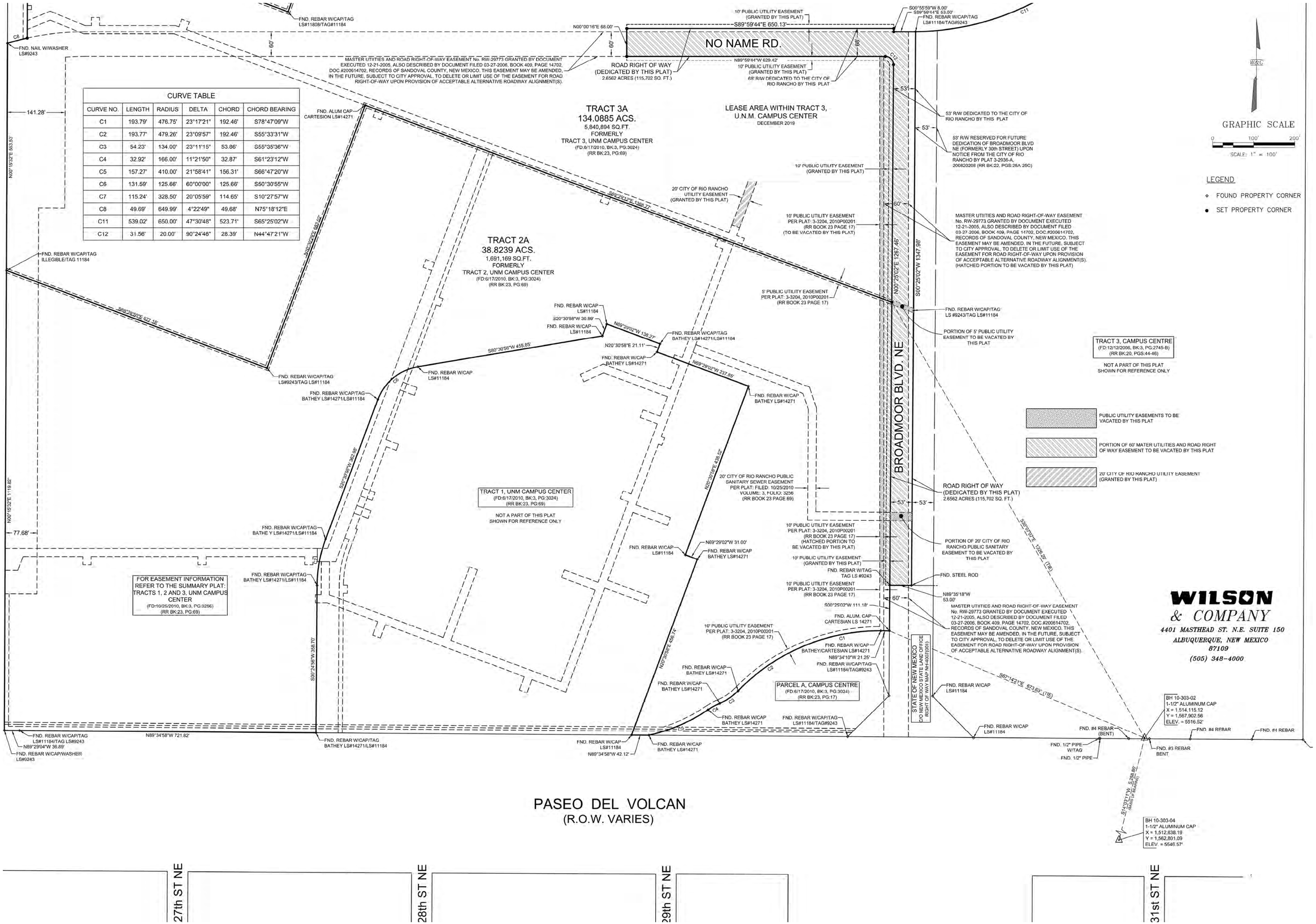

G. DONALD DUDLEY AIA
ARCHITECT
ARCHITECTURE • INTERIORS • PLANNING
AIA • NCARB • LEED AP

SIMMS TOWER STUDIO 850
400 GOLD AVENUE SW
ALBUQUERQUE, NEW MEXICO 87102
TEL 505.243.8100

THIS SHEET INCLUDED FOR REFERENCE ONLY

NEW BUILDING FOR:
RIO RANCHO SENIOR CENTER
CITY OF RIO RANCHO NEW MEXICO

MARK	DATE	DESCRIPTION

GDDA PROJECT NO: 18-137
DATE: 4/13/2020
SET NO:
SHEET TITLE: SURVEY PLAT

G105

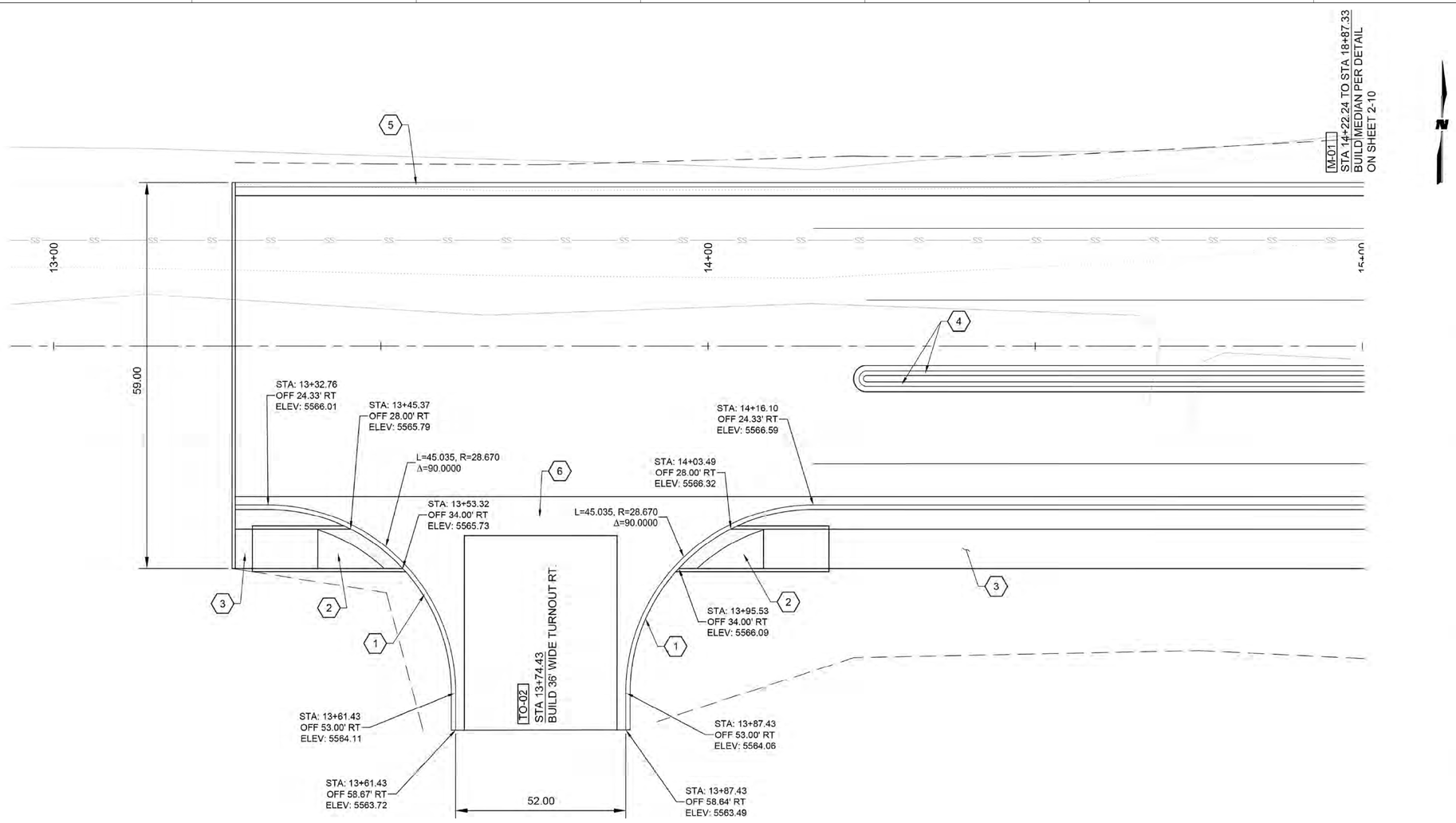

INTERSECTION DETAILS NO NAME–COLLEGE BLVD.

SCALE: 1"=10'

0 10' 20'
1"=10'-0"

CONSTRUCTION NOTES

1. SEE NMDOT STANDARD DRAWINGS 608.
2. ELEVATIONS DENOTED ON PLAN VIEWS ARE AS FOLLOWS:
   - ADA RAMP - ELEVATIONS ARE TO TOP OF SIDEWALK/RAMP OR FLOWLINE, RESPECTIVELY.
   - CURB AND GUTTER - ELEVATIONS ARE TO FLOWLINE OF CURB.
3. DETECTABLE WARNING SURFACE SHALL BE COLORED BRICK RED

KEYED NOTES

1. BUILD 8" STANDARD CURB & GUTTER PER CORR STD DWG. NO. CG-01
2. BUILD CURB RAMP PER NMDOT STD DWG 608-001-3 SEE ADA GENERAL NOTES SHEET 1-3
3. BUILD 6' WIDE SIDEWALK PER TYPICAL SECTION AND DETAILS ON SHEET 2-3
4. BUILD MEDIAN CURB & GUTTER PER CORR STD DWG. NO. CG-01
5. BUILD 8" CURB
6. VALLEY GUTTER PER CORR STD DWG VG-01

LEGEND

M-XX	MEDIAN
TO-XX	TURNOUT
← - - - →	FLOW LINE

WILSON & COMPANY
4401 MASTHEAD ST. N.E. SUITE 150
ALBUQUERQUE, NEW MEXICO
87109
(505) 348-4000

G. DONALD DUDLEY AIA
ARCHITECT
ARCHITECTURE - INTERIORS - PLANNING
AIA - NCARB - LEED AP
SIMMS TOWER STUDIO 850
400 GOLD AVENUE SW
ALBUQUERQUE, NEW MEXICO
87102
TEL 505.243.8100

THIS SHEET INCLUDED FOR REFERENCE ONLY

NEW BUILDING FOR:
RIO RANCHO SENIOR CENTER
CITY OF RIO RANCHO
NEW MEXICO

MARK	DATE	DESCRIPTION

GDDA PROJECT NO: 18–137

DATE: 4/13/2020

SET NO:

SHEET TITLE: TURNOUT DRAWING

G106

GENERAL NOTES

1. All construction shall be performed in accordance with 1) the project construction plans, 2) the project specifications, 3) the current edition of the City of Rio Rancho standard details, 4) the current edition of the NMDOT Standard Specifications for Highway and Bridge Construction, and 5) the New Mexico Standard Specifications for Public Works Construction and details, as prepared by the New Mexico Chapter, American Public Works Association and addendum. In the case of conflicting specifications, the City of Rio Rancho will determine which specification governs.

2. The Contractor agrees to assume the sole and complete responsibility for the job site conditions during the course of construction of the project, including safety of all persons and property. This requirement shall apply continuously and not be limited to normal working hours, and the Contractor shall defend, indemnify and hold the City and Engineer harmless from any and all liability, real or alleged, in connection with the performance of the work on this project, except for liability arising from the sole negligence of the City or Engineer.

3. No modifications to these plans shall be made without the written consent of the City, Engineer, and all approval signatories. The Engineer shall not be responsible for construction methods or techniques or for the prosecution of the work as shown on these plans. The Engineer shall not be held responsible for the acts or omissions of the Contractor, Subcontractors, or other persons performing any work, as shown in the project Contract Documents.

4. A Right-of-Way Use Permit and Traffic Control Plan (TCP) are required for all work performed within the public Right-of-Way. Provisions contained within Chapter 96 of the City of Rio Rancho Municipal Code shall govern. All construction signing, barricading, and channelization devices shall conform to the latest edition of the Manual on Uniform Traffic Control Devices (MUTCD). The Contractor is responsible for the setup and maintenance of all traffic control devices. Any modifications to the approved traffic control plan must by approved by the City prior to any changes being implemented. A Traffic Control Supervisor must be available for the duration of the project 24 hours a day and seven days a week. Access to residents and businesses must be maintained at all times.

5. The Contractor shall designate at least one emergency contact person, and shall provide telephone numbers where this person can be contacted at any time. This information shall be provided to the City's Project Manager.

6. The Contractor is responsible for obtaining all necessary permits from all jurisdictional authorities before the start of construction.

7. All work on this project shall be performed in accordance with applicable federal, state, and local laws, rules and regulations concerning construction safety, health, and environmental protection.

8. Existing site improvements which are damaged or displaced by the Contractor shall be removed and replaced by the Contractor at the Contractor's own expense. The work shall be approved by the City before construction of the repairs. Repairs must be accepted by the City before final payment.

9. The Contractor shall only utilize the designated staging areas for storage of all equipment and materials. The City assumes no responsibility or liability for the Contractor's equipment and material in the staging area. Security shall be the sole responsibility of the Contractor. If no staging area is designated on these plans, an offsite staging area shall be provided by the Contractor at the Contractor's expense, or the Contractor may negotiate with the City to use an onsite area.

10. Unless otherwise noted, all roadway stationing is along the centerline of the roadway right-of-way.

11. Unless otherwise noted, stationing of channels and/or pipes in drainage easements is along the centerline of the channel/pipe.

12. The Contractor shall be responsible for determining, in advance of their construction operations, if overhead utility lines, support structures, poles, guys, etc., are an obstruction to construction operations. If any obstruction is evident, the Contractor shall be responsible for coordinating with the appropriate utility owner to remove or support the utility obstruction. All costs for these requirements are incidental to the Contract.

13. Facilities which are not specifically located with actual vertical and horizontal controls on the construction documents, are shown approximate and in accordance with the best available information provided by various owners of the facilities, and supplemented by visual surface information where appropriate. Accuracy, location, and completeness of this information is the sole responsibility of the Contractor and should be verified, by any means necessary, before the initiation of construction. Should a conflict exist, the Contractor shall notify the City, Engineer, and the City's Project Manager immediately.

14. It is mandatory that a preconstruction meeting be held before commencing construction. The Contractor is responsible for contacting the City's Project Manager to determine the time and location of the preconstruction meeting.

15. At the preconstruction meeting, the Contractor shall submit a detailed construction schedule to the City's Project Manager. The schedule will be updated on a monthly basis and submitted with the monthly invoice.

16. Any work performed without the approval of the City of Rio Rancho and/or all work and materials not in conformance with the specifications is subject to removal and replacement at the Contractor's expense.

17. The Contractor shall contact NM 811 at 1-800-321-2537 for utility spots in accordance with applicable state law.

18. The Contractor shall confine their work to within the construction limits and/or public right-of-way to preserve existing vegetation, landscaping, and private property. Approval of these plans does not give or imply any permission to trespass or work on private property. Permission must be granted in writing by the Owner of that property.

19. It is the sole responsibility of the Contractor to keep the job site free from trash on a daily basis, and all materials will be neatly organized. Trash and/or non-used materials shall not be buried onsite.

20. The Contractor shall park equipment and vehicles so as not to interfere with normal activities of residents, other Contractors, or Emergency Services.

21. The Contractor will provide construction staking utilizing approved construction plans, the appropriate Right-of-Way maps, recorded plats, and City of Rio Rancho standard details. Each revision to the plans shall be recorded in the plan revision block. Plans shall include a location map with legal description(s) and location grid.

22. The Contractor shall maintain an up-to-date and accurate set of Working Record Drawings, redlined drawings, in accordance with the City or Rio Rancho's Development Process Manual (DPM) Chapter II.7. These Working Record Drawings shall reflect all approved changes to the original plans throughout the construction process. At the completion of construction, the Contractor shall submit the Working Record Drawings as outlined in the City or Rio Rancho's DPM Chapter II.7. Also, the Contractor shall ensure that all submittals, permitting, and construction activities are in accordance with the City or Rio Rancho's DPM and applicable ordinances. All costs for these requirements are incidental to the Contract.

23. No work shall be performed in a floodplain without written authorization from the City's Floodplain Manager.

24. Any work performed in a drainage way, channel, arroyo, or floodplain must be protected by the means identified in the Temporary Erosion Control and Sediment plans accepted by the City.

25. Vibration monitoring will be at the Contractor's discretion and incidental to the Contract.

SOILS

1. Unless otherwise specified subgrade soils and structural fill materials shall be compacted to the following percentages of the ASTM D-1557 maximum density.

MATERIALS	PERCENT (%) COMPACTION
STRUCTURAL FILL IN THE BUILDING AREA	95
SUB BASE FOR SLAB SUPPORT	95
MISCELLANEOUS BACKFILL BELOW STRUCTURAL FILL OR ROAD	95
MISCELLANEOUS BACKFILL BELOW UNPAVED, NON-BUILDING AREAS	90
ROAD SUB GRADE	95
SIDEWALK SUB GRADE	95
CURB AND GUTTER SUBGRADE	95
ARROYOS	90

ROADWAY GENERAL NOTES

1. No paving construction activities shall be started until all underground utilities within the roadway are completed, tested, and approved. All water valve boxes and electrical, telephone, television, and sewer manholes in the construction area shall be adjusted to finished grade.

2. All signs, barricades, channelization devices, pavement markings, sign frames and erection of such devices shall conform to the requirements of the "Manual on Uniform Traffic Control Devices for streets and highways" (MUTCD), current edition.

3. All street striping altered or destroyed during construction shall be replaced by the Contractor to match the original conditions (i.e. type, spacing) at the location prior to construction, or as shown in this plan set.

4. Street grades shall be restored by the Contractor to the existing grades unless otherwise directed by the City of Rio Rancho. Smooth transitions shall be made between existing pavement which remains in place and pavement which is replaced. When abutting new pavement to existing, saw cut back existing pavement to a neat, straight line as required to remove any broken or cracked pavement. Refer to standard drawing PS-02.

5. The location of all valves and manholes must be referenced at all times by the Contractor during construction and made accessible daily upon completion of all paving activities.

EROSION CONTROL/ENVIRONMENTAL PROTECTION/STORM WATER POLLUTION PREVENTION PLAN

1. The Contractor shall be responsible for fulfilling all necessary National Pollutant Discharge Elimination System (NPDES) requirements including, but not limited to, obtaining an NPDES permit before construction, filling out the Notice of Intent (NOI) application, and filling out the Notice of Termination (NOT) application. The Contractor shall also be responsible for the implementation of and inspection reports for the Storm Water Pollution Prevention Plan (SWPPP). The Contractor shall submit the SWPPP with the proposed construction staging area and temporary sanitary facilities clearly shown. Any check dams, silt fences, or other Best Management Practices (BMP) that are required in the approved SWPPP shall be included in and are incidental to the SWPPP bid amount.

2. The Contractor is required to keep a current copy of the SWPPP at the construction site or at an easily accessible location so that it can be made available at the time of an onsite inspection or upon request by the EPA; a state, tribal, or local agency approving storm water management plans; the operator of a storm sewer system receiving discharges from the site; or representatives of the U.S. Fish and Wildlife Service (USFWS) or the National Marine Fisheries Service (NMFS).

3. The Contractor shall conform to all City, County, State and Federal dust and erosion control regulations. The Contractor shall prepare and obtain any necessary dust or erosion control permits from the regulatory agencies.

4. The Contractor shall either promptly remove any material excavated within the public Right-of-Way or install BMPs according to NPDES requirements to prevent discharge of excavated material within the public Right-of-Way during a rain or wind event. All costs for these requirements are incidental to the Contract.

5. The Contractor shall implement the approved SWPPP and ensure that no soil erodes from the site into public Right-of-Way or onto private property.

6. The Contractor shall mitigate erosion of temporary or permanent dirt swales by installing BMPs identified in the approved SWPPP in the swales perpendicular to the direction of flow, and at intervals as specified in the SWPPP.

7. Construction areas shall be watered for dust control in compliance with government ordinances. The Contractor shall be responsible for locating and supplying water as required. Watering, as required for construction and dust control, shall be considered incidental to construction and no measurement or payment shall be made therefore.

8. Any areas disturbed by construction and not covered by landscaping or an impervious surface shall be re-vegetated with native grass seeding. When construction activities cease and earth disturbing activities will not resume within 14 days, stabilization measures must be initiated. Unless indicated otherwise on these plans or on the landscaping plan, native grass seeding shall be in accordance with Section 1012 of the New Mexico Standard Specifications for Public Works Construction, APWA NM Chapter, current edition.

9. All waste products from the construction site, including items designated for removal, construction waste, construction equipment waste products (oil, gas, tires, etc.) garbage, grubbing, excess cut material, vegetative debris, etc. shall be appropriately disposed of offsite at no additional cost to the City. It shall be the Contractor's responsibility to obtain permits required to haul or dispose of waste products. It shall be the Contractor's responsibility to ensure that the waste disposal site complies with government regulations regarding the environment, endangered species, and archaeological resources.

10. The Contractor shall be responsible for the cleanup and reporting of spills of hazardous materials associated with the construction site. Hazardous materials include gasoline, diesel fuel, motor oil, solvents, chemicals, paints, etc. which may be a threat to the environment. The Contractor shall report the discovery of past or present spills to the New Mexico Environment Department Emergency Response Team at (505) 827-9329.

11. The Contractor shall comply with all applicable regulations concerning surface and underground water. Contact with surface water by construction equipment and personnel shall be minimized. Equipment maintenance and refueling operations shall be performed in an environmentally safe manner in compliance with government regulations.

12. Where storm inlets are susceptible to inflow of silt or debris from construction activities, protection shall be provided on their upstream side utilizing BMPs according to NPDES requirements. All costs for these requirements are incidental to the Contract.

13. Storm Water Pollution Prevention Plans (SWPPP) and accompanying Federal EPA Administrative Procedures shall meet the City of Rio Rancho guidelines and procedures outlined in the current addition of the New Mexico State Highway and Transportation Department Storm Water Management Guidelines for Construction and Industrial Activities Manual.

EROSION CONTROL/ENVIRONMENTAL PROTECTION/STORM WATER POLLUTION PREVENTION PLAN

14. The Contractor shall provide adequate means for cleaning trucks and/or other equipment of mud before entering public streets. It is the Contractor's responsibility to clean streets and take whatever measures are necessary to ensure that all roads are maintained in a clean, mud and dust-free condition at all times.

15. No work may begin in a an arroyo or other drainage way until authorization has been provided by the U.S. Army Corp. of Engineers and the City of Rio Rancho Flood Plain Manager.

WATER GENERAL NOTES

1. For water connections to existing lines, the Contractor shall notify the City's Project Manager a minimum of 48 hours before the connection.

2. Compression joints may be used on copper service lines. Flared joints shall be used when connecting to plastic lines.

3. Valve boxes shall be brought to surface elevation upon completion of the surface course of pavement. Concrete collars shall be constructed to surface elevations.

4. Flushing of water lines shall be metered and reported to the City's Project Manager on a weekly basis. Preference for disposal is (1) on available land surface or (2) in storm sewers. Disposal methods shall be discussed with the City's Project Manager.

5. Flushing, disinfection and testing of water lines shall be coordinated with the City's Project Manager.

6. It will be the Contractor's sole responsibility to protect and maintain, in service, all existing utilities. The Contractor shall adequately support and protect existing utilities affected by the Contractor's trenching activity. In the event that existing utilities are damaged by the Contractor's operations, the Contractor shall arrange for and coordinate prompt repair by the respective utility and shall bear the cost of the repairs.

7. All water lines must have tracer wire and marker balls per City of Rio Rancho standard drawings.

8. The City of Rio Rancho shall approve material submittals before construction.

9. Before any water line installation, the following conditions will occur:

   a) The water line route will be cleared and grubbed and then graded to plan elevation

   b) The water line will be staked when outside an area with curb and gutter.

10. The City of Rio Rancho Utilities Operations Division shall be the only personnel authorized to operate existing valves, fire hydrants, etc. for construction purposes. All shutoffs must be coordinated with the City's Project Manager seven (7) days before proposed shutoff and shall comply with the accepted shutoff plan.

11. The Contractor is responsible for testing of all lines, including but not limited to, hydrostatic and bacteria testing, disinfecting, and flushing.The Contractor is responsible for the testing of the water line system before acceptance by the City. Testing shall be performed to demonstrate the functionality of the system. All costs for these requirements are incidental to the Contract.

12. For non-hot tap water connections to existing lines, the Contractor shall prepare and submit to the City's Project Manager, for acceptance, a water shutoff plan 48 hours before the connection is to take place.

13. The Contractor shall mark the top of the curb with a "W" for water lines following service installations and before final acceptance.

WASTEWATER GENERAL NOTES

1. Sewer/Water lines shall be placed in separate trenches at a distance of 15 feet typically or a minimum of 10 feet apart horizontally. The water line shall be placed a minimum of 1.5 feet higher in elevation than the sewer line. At all crossings of water and sewer lines, the water line shall be a minimum of 1.5 feet higher than the sewer line or the sewer line shall be C-900 pressurized pipe.

2. It will be the Contractor's sole responsibility to protect and maintain in service all existing utilities. The Contractor shall adequately support and protect existing utilities affected by the Contractor's trenching activity. In the event that existing utilities are damaged by the Contractor's operations, the Contractor shall arrange for and coordinate with the Project Manager, prompt repair by the respective utility and shall bear the cost of the repairs.

3. The City of Rio Rancho shall approve material submittals before construction

4. Prior to the sewer line installation, the following conditions will occur:

   a) The sewer line route will be cleared and grubbed and then graded to plan elevation

   b) The sewer line will be staked when outside an area with curb and gutter

5. All sewer lines must have marker balls per the City of Rio Rancho standard drawings. Tracer wire shall be installed if required by the City's Project Manager.

6. The City of Rio Rancho Utilities Operations Division shall be the only personnel authorized to operate existing valves, etc. for construction purposes. All shutoffs must be coordinated with the City's Project Manager seven (7) days before to proposed shutoff and shall comply with the accepted shutoff plan.

7. 30 days following installation and backfill of sewer lines, a deflection test using a hand pulled mandrel shall be performed in the presence of the City's Inspector. All costs for these requirements are incidental to the Contract.

8. Air testing of sewer lines and hydrostatic testing of force mains shall be conducted in the presence of the City's Inspector. All costs for these requirements are incidental to the Contract.

9. All sewer service lines shall be inspected by TV camera and videoed then provided to the City's Inspector for review before acceptance by the City. In the event that the first inspection or subsequent inspections after that do not pass, the Contractor will be required to perform additional inspections of the sewer service lines using a TV camera at the Contractor's expense.

10. Manholes shall meet the City of Rio Rancho standards except that there shall be no ladder rungs installed.

11. The Contractor is responsible for testing of all force main lines, including but not limited to hydrostatic and bacteria testing, disinfecting, and flushing. All costs for these requirements are incidental to the Contract.

12. If bypass pumping is required, then a bypass pumping plan must be submitted to the City's Project Manager, for acceptance, seven (7) days before bypass pumping begins.

13. The Contractor shall mark the top of the curb and pan of the gutter with "S" for sanitary sewer following service installation and before final acceptance.

14. Manholes shall be raised to surface course of pavement. Circular concrete collars shall be constructed to surface elevation.

15. No bricks shall be used to adjust manholes to finished grade.

ADA GENERAL NOTES

1. These drawings provide guidance for compliance with the current public right of way accessibility guidelines (PROWAG). These standards shall apply to all new and altered sidewalks.

2. Surfaces shall be stable, firm, and slip resistant. Sidewalk and curb ramp surfaces shall provide consistent slopes within each section.

3. All street striping altered or destroyed during construction shall be replaced by the Contractor to All broom finishes shall be perpendicular to the direction of pedestrian travel.

4. A vertical change of 1/4 inch (6mm) or less is allowed. if between 1/4 inch and 1/2 inch (6mm and 13mm), then it needs to be beveled 2:1. Changes greater than 1/2 inch shall be ramped.

5. Openings or cracks in sidewalk surfaces shall not exceed 1/2 inch (13mm). Elongated openings should be placed so that the long dimension is perpendicular or diagonal to the dominant direction of travel.

6. The least possible curb ramp slope shall be used. Curb ramps running slope shall not exceed 12:1. Where existing terrain is steep, curb ramps shall not exceed 15 feet in length.

7. Provide a flush transition between curb ramps, sidewalks, gutter, and edge of pavement, free of drainage lip, abrupt grade changes, drop-offs, or any surface irregularities. A 5% (20:1) or flatter transition taper shall be provided from the street to the gutter for curb ramps locations (this may require special treatment of the edge of OGFC) when diagonal (not in line with crosswalks) curb ramps are necessary. A 2% (50:1) transition or "lower landing" shall be provided. The gutter running slope (flow line) shall not exceed 2% measured along the bottom of the curb ramp.

8. Curb ramps shall be located to provide the most direct route of travel across the traffic lanes.

9. Two directional (in line with the crosswalks) curb ramps per corner are used in order to provide short and direct crossings for the user.

10. Sign posts, utility poles, fire hydrants, traffic signals standards, light poles, pull boxes, meters, valves, etc., shall not be located in the curb ramp including side flares and landings.

11. In order to better accommodate conditions in the field, the contractor shall obtain final approval of curb ramp locations from the project manager and the city manager and the city traffic engineer. When necessitated by existing physical conditions. Alternate curb ramps must be submitted to the project manager for approval by the city traffic engineer.

12. Landings shall be a minimum of 48" x 48". Slopes shall not exceed 2% (50:1) in all directions.

13. Detectable warnings are required at all street intersections, signalized driveways, commercial driveways 30' wide or greater, and marked mid-block crosswalks.

14. Concrete Procedural note: Before scheduling delivery of concrete, contractor shall meet with City Inspector/PM to ensure the concrete formwork is constructed to dimensions and grades shown on plans and meets PROWAG, 2011 Technical Design Criteria. Calibrate 24" electronic digital level with Contractor's electronic digital level prior to verifying measurements. Verify measurements meet requirements or require correction of all discrepancies before scheduling of concrete to ensure the finished concrete will meet PROWAG. When all measurements meet requirements then the inspector shall permit concrete pour. Repeat the procedure after concrete pour to ensure the curb ramp meets PROWAG compliance. Final acceptance of a curb ramp does not occur until the final inspection of the project. This procedure shall be considered incidental to the installation of the ADA curb ramps.

15. The contractor shall submit a proposed work plan for pedestrian improvements to the project engineer for review and approval prior to initiating this work. This plan shall include the method proposed to maintain pedestrian access to businesses, schools, hospitals, buildings, etc. throughout the pedestrian improvements construction in particular. The contractor, at minimum, shall maintain a 48" clear path for pedestrians so as to meet ADA accessibility requirements. All temporary pedestrian facilities implemented during construction shall comply with ADA standards.

16. Sidewalk and curb ramp cross slope is recommended to be constructed for a cross slope of 1.5% typical, but shall not exceed 2.0% cross slope on the pedestrian access route.

CIVIL DRAWING INDEX

SHEET No.	SHEET TITLE
CG-100	GENERAL NOTES
C-101	OVERALL GRADING AND DRAINAGE PLAN
C-102	SITE UTILITY PLAN
C-501	MISCELLANEOUS DETAILS
C-502	MISCELLANEOUS DETAILS
C-503	MISCELLANEOUS DETAILS

MILLER ENGINEERING CONSULTANTS
Engineers • Planners

G. DONALD DUDLEY AIA
ARCHITECT
ARCHITECTURE • INTERIORS • PLANNING
AIA • NCARB • LEED AP
SIMMS TOWER STUDIO 850
400 GOLD AVENUE SW
ALBUQUERQUE, NEW MEXICO 87102
TEL 505.243.8100

VERLYN A. MILLER
NEW MEXICO
14507
REGISTERED PROFESSIONAL ENGINEER
4/13/20

NEW BUILDING FOR:
RIO RANCHO SENIOR CENTER
CITY OF RIO RANCHO
NEW MEXICO

MARK	DATE	DESCRIPTION

GDDA PROJECT NO: 18-137
DATE: 10/21/2019
DRAWN BY: MEC
CHECKED BY: VAM
SET NO:
SHEET TITLE: GENERAL NOTES
100% CD'S

CG-100

LEGEND

•38.00 FG	PROPOSED SPOT ELEVATIONS (FINISHED GRADE)
•MATCH (95.19)	MATCH EXISTING ELEVATIONS
X OSG 59.4	OFF SITE GRADE BY OTHERS
TCON	TOP OF CONCRETE
FL	FLOW LINE, CURB
INV	INVERT
FG	FINISH GRADE
TBC	TOP OF BASE COURSE
TC	TOP OF CURB
TG	TOP OF GRATE
TA	TOP OF ASPHALT
—SD—	STORM DRAIN LINE
—5895—	PROPOSED MAJOR CONTOUR
	PROPOSED MINOR CONTOUR
— 5895 —	EXISTING MAJOR CONTOUR
	EXISTING MINOR CONTOUR
	PROPOSED FENCE
	FLOW ARROW
	GRADE BREAK–HIGH POINT
	SWALE

KEYED NOTES

1. NEW BUILDING, SEE ARCHITECTURAL PLANS FOR DETAILS.
2. NEW ASPHALT PAVED DRIVEWAY. SEE SHEET C–501 FOR DETAILS.
3. NEW BASE COURSE SECTION. SEE SHEET C–501 FOR SECTION DETAIL.
4. CONCRETE HEADER CURB. SEE SHEET C–501 FOR DETAILS.
5. NEW CENTRAL DETENTION POND. SEE SHEET C–503 FOR DETAIL FOR TYPICAL POND SECTION .INV.=53.0, TOP 57.0, SPILLWAY CREST=56.0, MWSE=55.3
6. NEW STANDARD CURB AND GUTTER. SEE DETAIL SHEET C–501 FOR DETAILS.
7. APPROXIMATE LOCATION OF PROPERTY LINE.
8. NEW TYPE DOUBLE 'D' INLET. TG= 58.5, INV= 56.0
9. NEW 24"ø HDPE STORM DRAIN PIPE, @ SLOPE 0.5%.
10. NEW 4'ø MANHOLE SEE DETAIL SHEET C–503.
11. NEW 6' WIDE RIP–RAP RUNDOWN SEE DETAIL SHEET C–503.
12. NEW 18"ø CMP 90° BEND, TURNED DOWN.
13. NEW 18'ø CMP OUTFLOW CULVERT. INV(IN)=54.0, INV (OUT)=53.5, L=30'.
14. NEW 10' WIDE RIP–RAP EMERGENCY SPILLWAY. CREST= 56.0, TOP= 57.0.
15. GRADE OUTFLOW CHANNEL TO DRAIN, COORDINATE WITH THE CITY OF RIO RANCHO PUBLIC WORKS.
16. NEW 6' WIDE RIP–RAP SWALE SEE DETAIL SHEET C–503.
17. NEW 5'x10' 18" THICK LOOSE RIP–RAP PAD, SEE DETAIL SHEET C–503.
18. NEW SPLASH GUARD AT ROOF DRAIN LOCATIONS, SEE DETAIL SHEET C–501.
19. NEW 4" STORM DRAIN LINE. L=20', S=2%. END 5' FROM BUILDING LOCATE PER MECHANICAL PLANS.
20. NEW 4" STORM DRAIN LINE. L=25', S=2%. END 5' FROM BUILDING LOCATE PER MECHANICAL PLANS.
21. OFF SITE ELEVATIONS (BY OTHERS) ARE COORDINATED WITH ON SITE ELEVATIONS.
22. GRAVEL MULCH SLOPE PROTECTION, 3" OF 3/4" GRAVEL MULCH.
23. FUTURE ASPHALT PAVED TURN–OUT BY CITY.

GENERAL NOTES:

1. FOR ALL CITY OF RIO RANCHO STANDARD DRAWINGS, SEE LINK: https://rrmm.gov/539/Roads-Drainage-Traffic-Standard-Details.

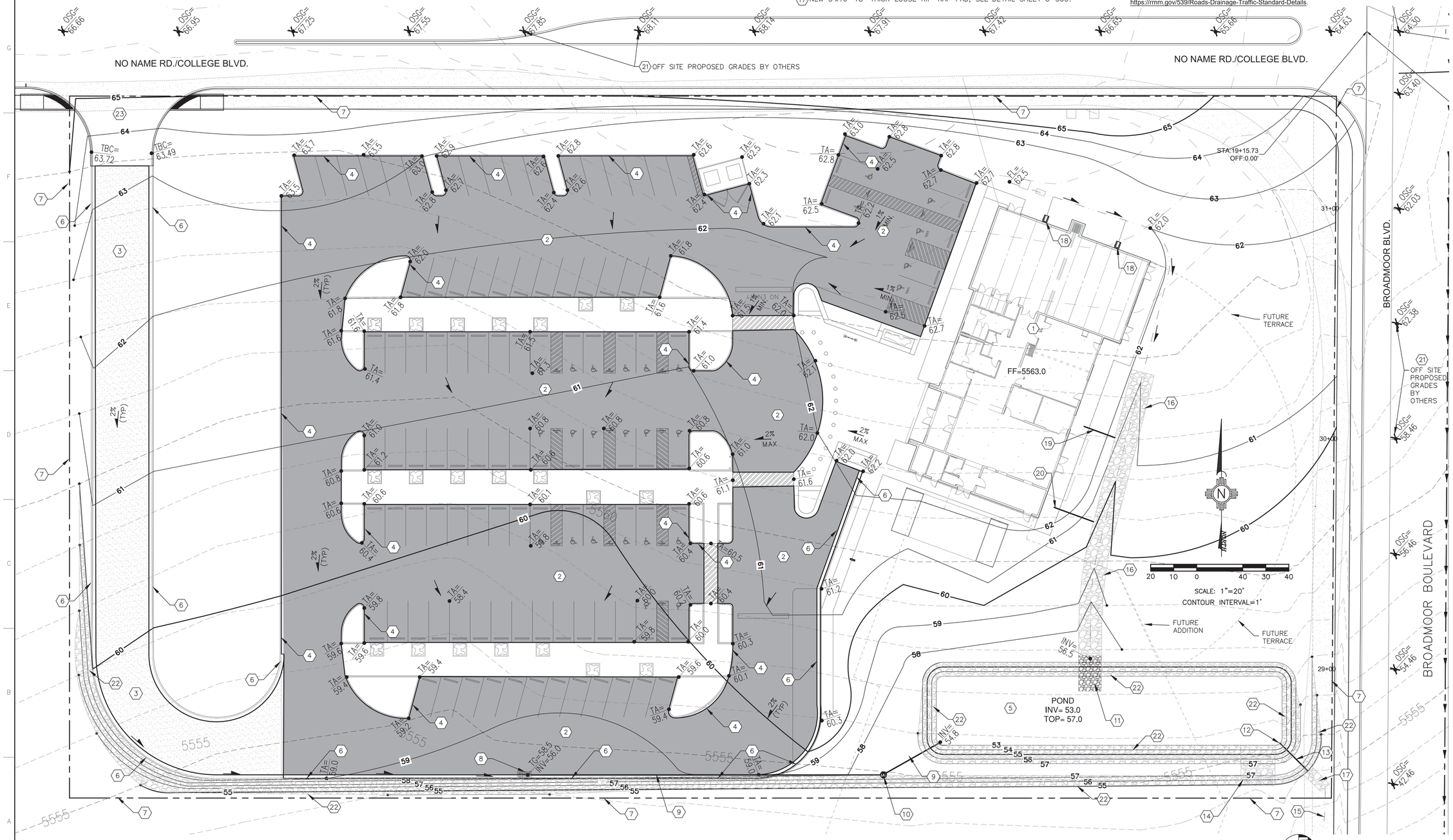

A1 GRADING AND DRAINAGE PLAN
SCALE: 1" = 20'

MILLER ENGINEERING CONSULTANTS
Engineers • Planners

G. DONALD DUDLEY AIA
ARCHITECT
ARCHITECTURE • INTERIORS • PLANNING
AIA • NCARB • LEED AP
SIMMS TOWER STUDIO 850
400 GOLD AVENUE SW
ALBUQUERQUE, NEW MEXICO
87102
TEL 505.243.8100

VERLYN A. MILLER III NEW MEXICO 14507 REGISTERED PROFESSIONAL ENGINEER

NEW BUILDING FOR:
RIO RANCHO SENIOR CENTER
CITY OF RIO RANCHO NEW MEXICO

MARK	DATE	DESCRIPTION

GDDA PROJECT NO: 18–137
DATE: 10/21/2019
DRAWN BY: MEC
CHECKED BY: VAM
SET NO:
SHEET TITLE: GRADING AND DRAINAGE PLAN
100% CD'S

C-101

LEGEND

- NEW WATER LINE
- NEW SANITARY SEWER LINE
- EXISTING WATER SERVICE LINE
- EXISTING SANITARY SEWER LINE
- NEW DOUBLE CLEANOUT
- NEW WATER METER
- NEW FIRE HYDRANT
- NEW POST INDICATOR VALVE

GENERAL NOTES:

1. FOR ALL CITY OF RIO RANCHO STANDARDS., SEE LINK: https://rrnm.gov/539/Roads-Drainage-Traffic-Standard-Details.

SEWER KEYNOTES

1. POINT OF CONNECTION FOR NEW 4" SANITARY SEWER LINE. SEE MECHANICAL/PLUMBING SHEETS FOR EXACT LOCATION, INVERT OF STUB OUT, AND CONNECTION DETAILS.
2. INSTALL NEW 4" PVC SANITARY SEWER SERVICE LINE PER CITY OF RIO RANCHO CONSTRUCTION STANDARDS.. MINIMUM SLOPE = 2.00%.
3. INSTALL NEW SANITARY SEWER DOUBLE CLEANOUT PER CITY OF RIO RANCHO CONSTRUCTION STANDARD DRAWING.
4. CONNECT TO EXISTING 15" PVC SAS LINE WITH (InsertATee) CONNECTION.
5. INSTALL NEW SANITARY SEWER SINGLE CLEANOUT PER CITY OF RIO RANCHO CONSTRUCTION STANDARD DRAWING.

WATER KEYNOTES

1. CONNECT NEW 8" WATER MAIN LINE TO EXISTING 8" WATER LINE STUB OUT PER CITY OF RIO RANCHO CONSTRUCTION STANDARDS. THE CONTRACTOR SHALL BE RESPONSIBLE FOR COORDINATING WITH THE PROJECT ENGINEER FOR CONNECTIONS TO THE WATER LINE.
2. INSTALL NEW 8" GATE VALVE PER CITY OF RIO RANCHO CONSTRUCTION STANDARDS. THE CONTRACTOR SHALL PROVIDE A SUBMITTAL FOR INSPECTION AND ACCEPTANCE OF THE GATE VALVE AND GATE VALVE INSTALLATION.
3. INSTALL NEW 2" DOMESTIC WATERLINE PER CITY OF RIO RANCHO CONSTRUCTION STANDARDS.. 4' MINIMUM BURY.
4. END LINE 5' FROM BUILDING. SEE MECHANICAL SHEET FOR CONTINUATION.
5. INSTALL NEW 8" WATER MAIN PER CITY OF RIO RANCHO CONSTRUCTION STANDARDS.. 4' MINIMUM BURY.
6. INSTALL NEW FIRE HYDRANT ASSEMBLY, PER CITY OF RIO RANCHO CONSTRUCTION STANDARDS.. THE CONTRACTOR SHALL PROVIDE A SUBMITTAL FOR APPROVAL PRIOR TO CONSTRUCTION. THE CONTRACTOR SHALL BE RESPONSIBLE FOR COORDINATING WITH THE PROJECT ENGINEER FOR INSPECTION AND ACCEPTANCE OF THE FIRE HYDRANT ASSEMBLY AND FIRE HYDRANT ASSEMBLY INSTALLATION.
7. INSTALL 1-6" (FIRE) AND 1- 2" (DOMESTIC) REDUCED PRESSURE BACKFLOW PREVENTER DEVICES BOTH FEBCO MODEL LF860 (EACH SIZED APPROPRIATELY) AND A SINGLE 4'x8' HOT BOX ENCLOSURE, MODEL SAFE-T-COVER 600T-AL (BY GENERAL CONTRACTOR), PER CITY OF RIO RANCHO CONSTRUCTION STANDARDS. THE CONTRACTOR SHALL PROVIDE A SUBMITTAL FOR APPROVAL PRIOR TO CONSTRUCTION.
8. NEW REMOTE F.D.C. FOR BUILDING. PER CITY OF RIO RANCHO CONSTRUCTION STANDARDS..
9. NEW FIRE SPRINKLER RISER.
10. NEW POST INDICATOR VALVE. PER CITY OF RIO RANCHO CONSTRUCTION STANDARDS..
11. NEW 2" WATER METER. PER CITY OF RIO RANCHO CONSTRUCTION STANDARDS.
12. NOT USED
13. INSTALL NEW 6" DEDICATED FIRE LINE PER CITY OF RIO RANCHO CONSTRUCTION STANDARDS..
14. INSTALL NEW 8"x8"x6" TEE PER CITY OF RIO RANCHO CONSTRUCTION STANDARDS.
15. INSTALL NEW 8" CAP PER CITY OF RIO RANCHO CONSTRUCTION STANDARDS..
16. WATERLINE FOR REMOTE FDC.
17. INSTALL NEW 2" METER FOR LANDSCAPE USE, PER CITY OF RIO RANCHO CONSTRUCTION STANDARDS.

GENERAL NOTES

1. FUTURE DEVELOPMENT TO UTILIZE EXISTING SERVICES FROM EXISTING BUILDING.
2. BACKFILL AND COMPACTION FOR SITE WORK SHALL BE ACCORDING TO THE GEOTECHNICAL REPORT FOR THE PROJECT.
3. MAINTENANCE OF THESE FACILITIES SHALL BE THE RESPONSIBILITY OF THE OWNER(S) OF THE PROPERTY SERVED.
4. SOME SAWCUT, REMOVE, DISPOSE AND REPLACE FOR SOME UTILITY LINES ARE SHOWN ON THE GRADING AND DRAINAGE SHEET.
5. THE CONTRACTOR SHALL FIELD VERIFY LOCATION AND SIZE OF ALL UTILITIES PRIOR TO CONSTRUCTION.
6. ALL UTILITIES SHALL BE INSTALLED IN ACCORDANCE WITH THE CITY OF RIO RANCHO STANDARD SPECIFICATIONS AND STANDARDS. OR THE APWA STANDARD SPECIFICATIONS FOR PUBLIC WORKS. NEW MEXICO CHAPTER. LATEST EDITION OR PROJECT MANUAL.
7. MINIMUM BURY DEPTH OF ALL UTILITIES SHALL BE MEASURED FROM THE TOP OF FINISH GRADE AS SHOWN ON THE GRADING AND DRAINAGE SHEET C-101.
8. CONTRACTOR SHALL REFER TO DETAIL SHEETS C-501 THRU C-503 FOR ADDITIONAL UTILITY DETAILS FOR WATER AND SEWER.
9. ALL LOCATIONS WHERE PROPOSED UTILITIES CROSS PROPOSED RETAINING WALLS, THE CONTRACTOR SHALL ENSURE THE TOP OF THE PROPOSED UTILITY IS MINIMUM 24" BELOW THE BOTTOM OF THE PROPOSED FOOTING.
10. CONTRACTOR SHALL INSURE THAT WATER AND SEWER SERVICES IS LOCATED WITHIN 5' OF NEW BUILDING FOOTPRINT.

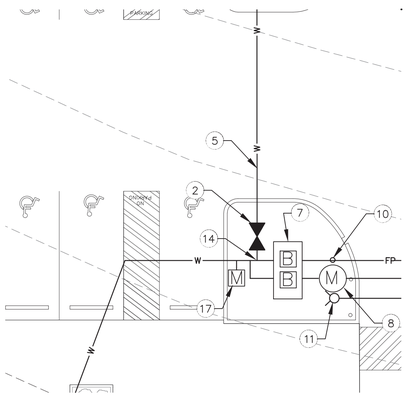

A2 DETAIL A
SCALE: 1" = 10'

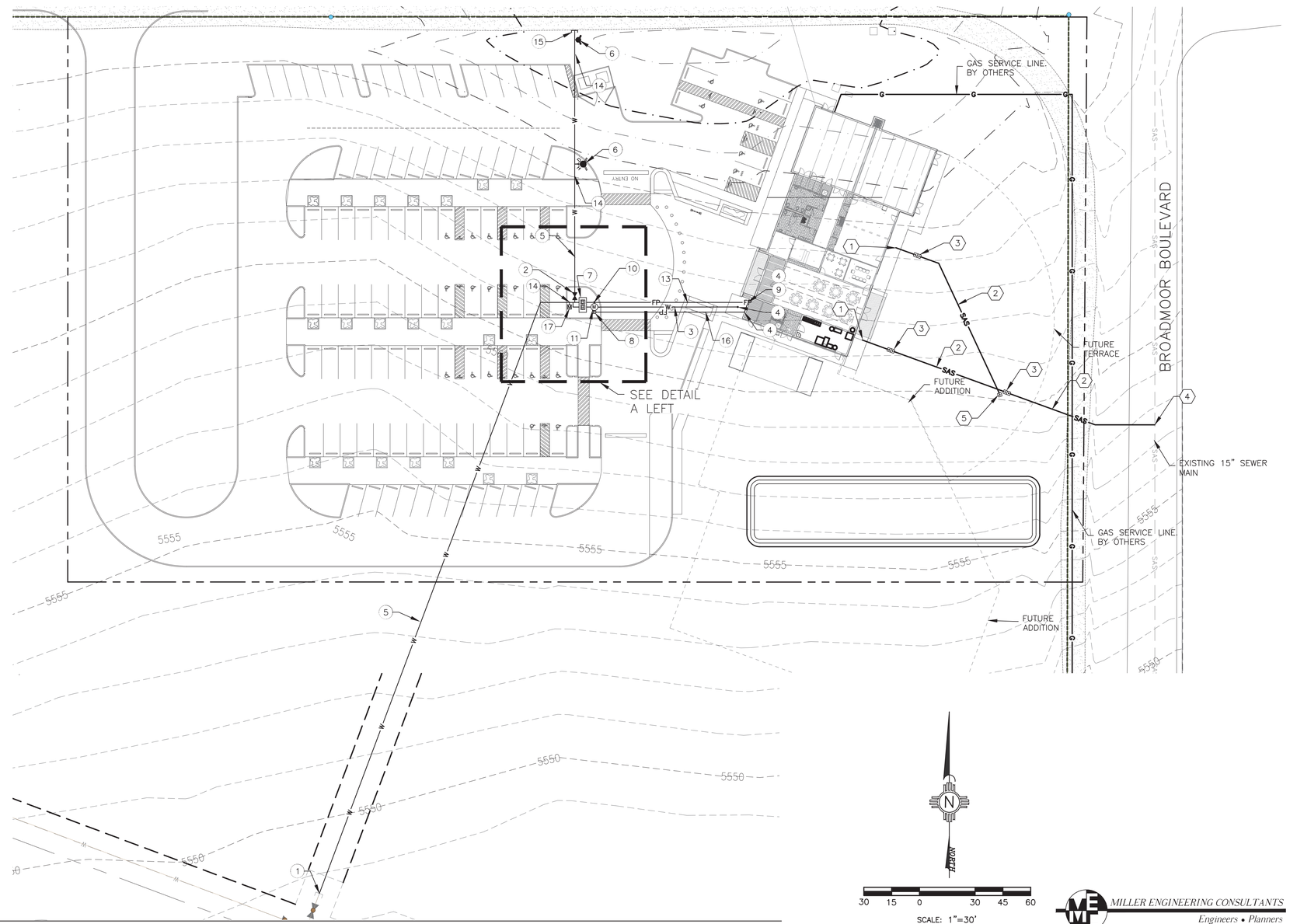

A2 SITE UTILITY PLAN
SCALE: 1" = 20'

30 15 0 30 45 60
SCALE: 1"=30'
CONTOUR INTERVAL=1'

MILLER ENGINEERING CONSULTANTS
Engineers • Planners

G. DONALD DUDLEY AIA
ARCHITECT
ARCHITECTURE • INTERIORS • PLANNING
AIA • NCARB • LEED AP
SIMMS TOWER STUDIO 850
400 GOLD AVENUE SW
ALBUQUERQUE, NEW MEXICO
87102
TEL 505.243.8100

VERLYN A. MILLER II
NEW MEXICO
14507
REGISTERED PROFESSIONAL ENGINEER

NEW BUILDING FOR:
RIO RANCHO SENIOR CENTER
CITY OF RIO RANCHO NEW MEXICO

MARK	DATE	DESCRIPTION

GDDA PROJECT NO: 18-137
DATE: 02/13/20
DRAWN BY: MEC
CHECKED BY: VAM
SET NO:
SHEET TITLE: SITE UTILITY PLAN
100% CD'S

C-102

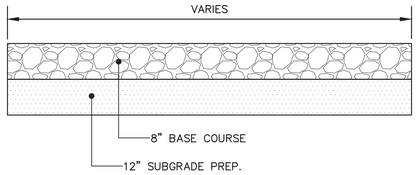

C1 BASE COURSE DETAIL

SCALE: NOT TO SCALE

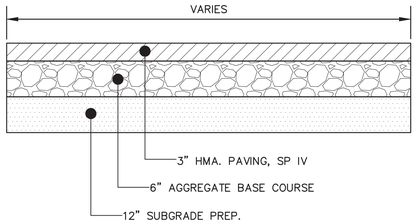

D1 TYPICAL LIGHT DUTY ASPHALT PAVING DETAIL

SCALE: NOT TO SCALE

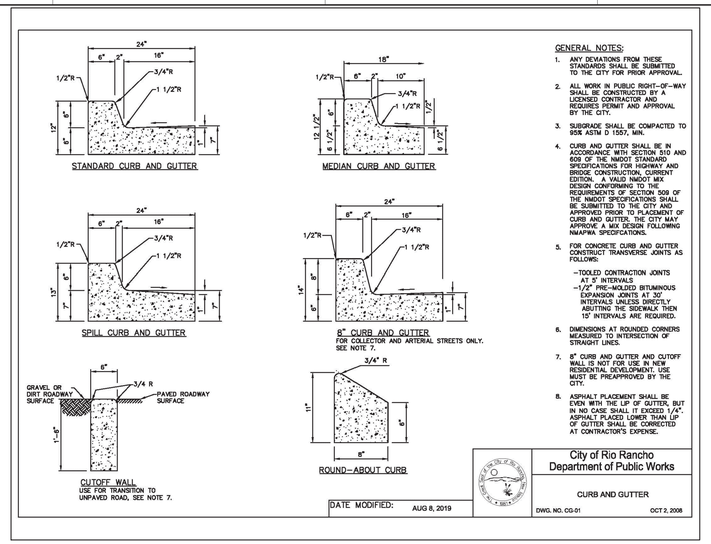

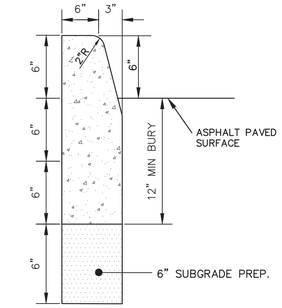

A2 HEADER CURB DETAIL

SCALE: NOT TO SCALE

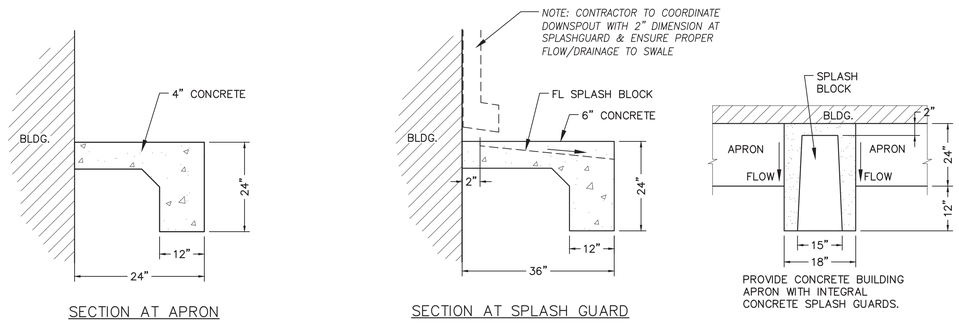

SECTION AT APRON

SECTION AT SPLASH GUARD

PROVIDE CONCRETE BUILDING APRON WITH INTEGRAL CONCRETE SPLASH GUARDS.

B2 CONCRETE APRON AND SPLASHGUARD DETAILS

SCALE: NOT TO SCALE

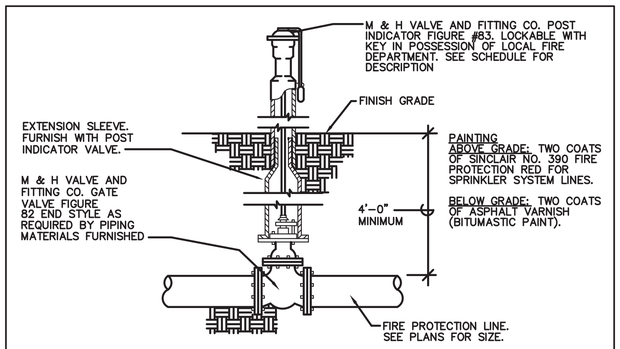

POST INDICATOR VALVE DETAIL

SCALE: NONE

MECHANICAL	PLUMBING	DTL101W

GENERAL NOTES:

1. FOR ALL CITY OF RIO RANCHO STANDARD DRAWINGS, SEE LINK: https://rrmm.gov/539/Roads-Drainage-Traffic-Standard-Details.

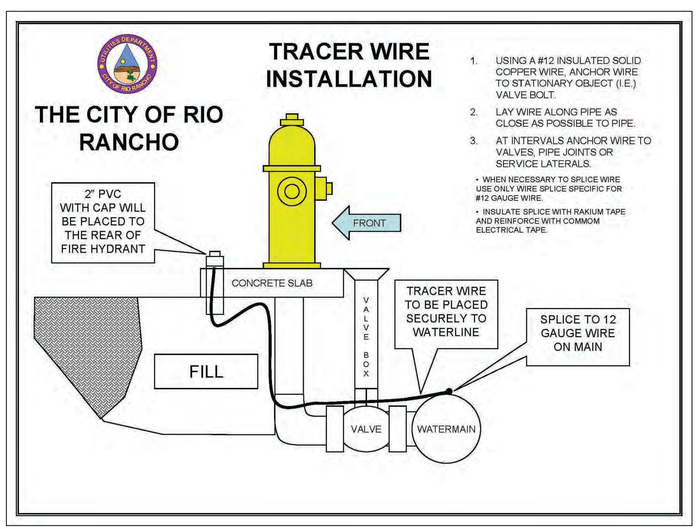

A2 TRACER WIRE INSTALLATION

SCALE: NOT TO SCALE

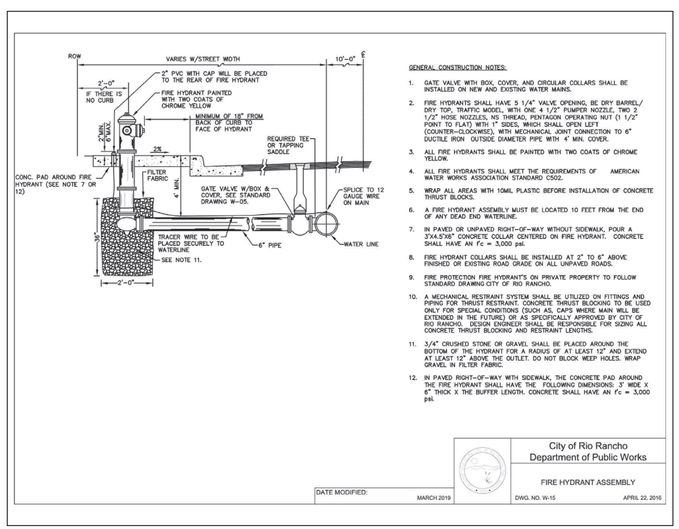

A3 FIRE HYDRANT ASSEMBLY

SCALE: NOT TO SCALE

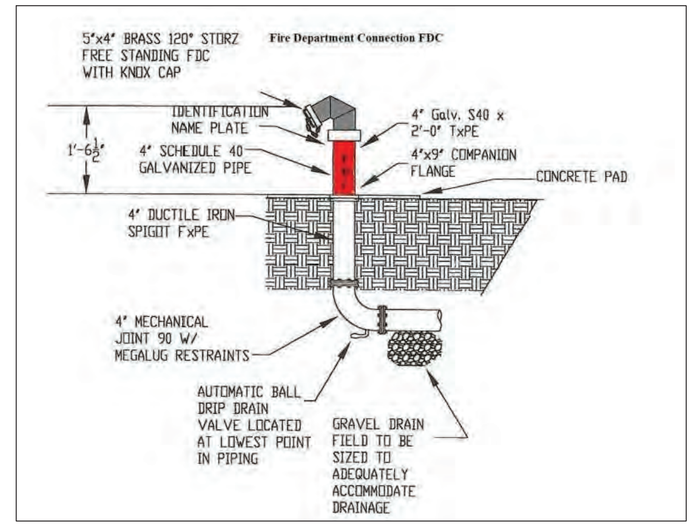

A6 REMOTE FIRE DEPARTMENT CONNECTION

SCALE: NOT TO SCALE

G. DONALD DUDLEY AIA
ARCHITECT
ARCHITECTURE • INTERIORS • PLANNING
AIA • NCARB • LEED AP
SIMMS TOWER STUDIO 850
400 GOLD AVENUE SW
ALBUQUERQUE, NEW MEXICO 87102
TEL 505.243.8100

VERLYN A. MILLER II
NEW MEXICO
14507
REGISTERED PROFESSIONAL ENGINEER
Aug 2019

NEW BUILDING FOR:
RIO RANCHO SENIOR CENTER
CITY OF RIO RANCHO NEW MEXICO

MARK	DATE	DESCRIPTION

GDDA PROJECT NO: 18-137
DATE: 10/21/2019
DRAWN BY: MEC
CHECKED BY: VAM
SET NO:
SHEET TITLE: MISCELLANEOUS DETAILS
100% CD'S

C-501

GENERAL NOTES:

1. FOR ALL CITY OF RIO RANCHO STANDARD DRAWINGS, SEE LINK: https://rrnm.gov/539/Roads-Drainage-Traffic-Standard-Details.

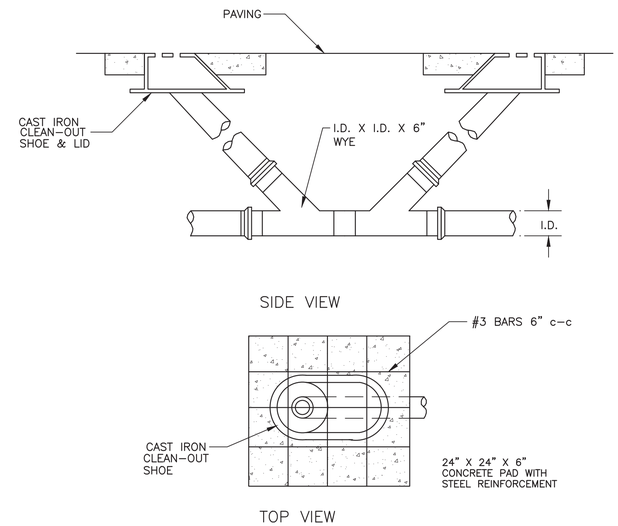

C3 TYPICAL DOUBLE SAS CLEAN-OUT
SCALE: NONE

SOILS CLASS	SOIL TYPE	EMBEDMENT SOILS CLASSIFICTIONS DESCRIPTION
CLASS I SOILS*		MANUFACTURED ANGULAR, GRANULAR MATERIAL, 1/4 TO 1 1/2 INCHES (6 TO 40 MM) SIZE, INCLUDING MATERIALS HAVING A REGIONAL SIGNIFICANCE SUCH AS CRUSHED STONE OR ROCK, BROKEN CORAL, CRUSHED SLAG, CINDERS, OR CRUSHED SHELLS, COMPLYING TO THE REQUIREMENTS OF CLASS II SOILS.
CLASS II SOILS**	GW	WELL-GRADED GRAVELS AND GRAVEL-SAND MIXTURES, LITTLE OR NO FINES. 50% OR MORE COARSE FRACTION RETAINED ON NO. 4 SIEVE. MORE THAN 95% RETAINED ON NO. 200 SIEVE. CLEAN.
CLASS II SOILS**	GP	POORLY GRADED GRAVELS AND GRAVEL-SAND MIXTURES, LITTLE OR NO FINES. 50% OR MORE COARSE FRACTION RETAINED ON NO. 4 SIEVE. MORE THAN 95% RETAINED ON NO. 200 SIEVE. CLEAN.
CLASS II SOILS**	SW	WELL GRADED SANDS AND GRAVELLY SANDS, LITTLE OR NO FINES.MORE THAN 50% OF COARSE FRACTION PASSES NO. 4 SIEVE. MORE THAN 95% RETAINED ON NO. 200 SIEVE. CLEAN.
CLASS II SOILS**	SP	POORLY GRADED SANDS AND GRAVELLY SANDS, LITTLE OR NO FINES. MORE THAN 50% OF COARSE FRACTION PASSES NO. 4 SIEVE. MORE THAN 95% RETAINED ON NO. 200 SIEVE. CLEAN.

* SOILS ARE AS DEFINED IN ASTM D2487, EXCEPT FOR CLASS I. SOILS WHICH ARE DEFINED IN ASTM D2321.
** IN ACCORDANCE WITH ASTM D2487, LESS THAN 5% PASSES NO. 200 SIEVE.
FROM TABLE 701.3.A. NEW MEXICO STANDARD SPECIFICATIONS FOR PUBLIC WORKS CONSTRUCTION, 2006 EDITION

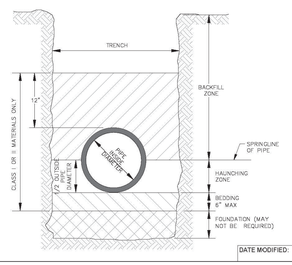

GENERAL CONSTRUCTION NOTES:

1. BEDDING MATERIALS SHALL BE CLASSED AS DEFINED IN AMERICAN SOCIETY FOR TESTING AND MATERIALS STANDARD D2321. REFER TO TABLE 701.3.A OF THE CITY OF RIO RANCHO STANDARD SPECIFICATIONS, AS AMENDED FOR SOIL CLASSIFICATION DESCRIPTIONS.
2. COMPACTION TESTING SHALL BE TAKEN AT SPRINGLINE OF PIPE.
3. COMPACTION TESTING SHALL BE TAKEN AT INITIAL BACKFILL ZONE.
4. FOR PAVED AREAS, COMPACTION SHALL BE 95% STANDARD MODIFIED PROCTOR PER AMERICAN SOCIETY FOR TESTING AND MATERIALS STANDARD D1557.
5. FOR UNPAVED AREAS, COMPACTION SHALL BE 90% STANDARD MODIFIED PROCTOR PER AMERICAN SOCIETY FOR TESTING AND MATERIALS STANDARD D1557.

DATE MODIFIED: APRIL 2016

City of Rio Rancho
Department of Public Works

PIPE BEDDING

DWG. NO. S-04 APRIL 22, 2016

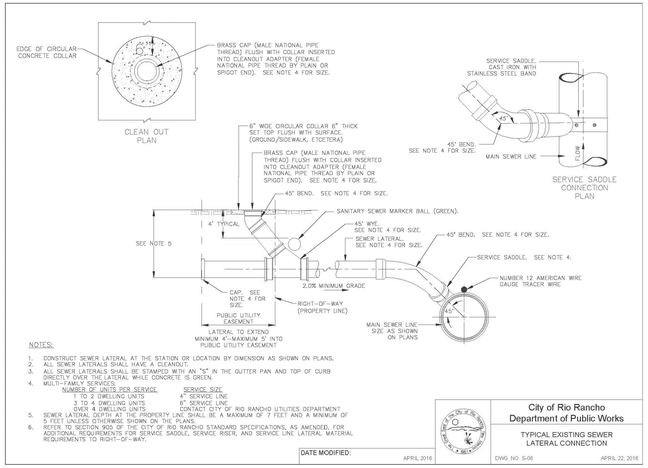

NOTES:

1. CONSTRUCT SEWER LATERAL AT THE STATION OR LOCATION BY DIMENSION AS SHOWN ON PLANS.
2. ALL SEWER LATERALS SHALL HAVE A CLEANOUT.
3. ALL SEWER LATERALS SHALL BE STAMPED WITH AN "S" IN THE GUTTER PAN AND TOP OF CURB DIRECTLY OVER THE LATERAL WHILE CONCRETE IS GREEN.
4. MULTI-FAMILY SERVICES.

NUMBER OF UNITS PER SERVICE	SERVICE SIZE
UNDER 2 DWELLING UNITS	4" SERVICE LINE
3 TO 4 DWELLING UNITS	6" SERVICE LINE
OVER 4 DWELLING UNITS	CONTACT CITY OF RIO RANCHO UTILITIES DEPARTMENT

5. SEWER LATERAL DEPTH AT THE PROPERTY LINE SHALL BE A MAXIMUM OF 7 FEET AND A MINIMUM OF 5 FEET UNLESS OTHERWISE SHOWN ON THE PLANS.
6. REFER TO SECTION 905 OF THE CITY OF RIO RANCHO STANDARD SPECIFICATIONS, AS AMENDED, FOR ADDITIONAL REQUIREMENTS FOR SERVICE SADDLE, SERVICE RISER, AND SERVICE LINE LATERAL MATERIAL REQUIREMENTS TO RIGHT-OF-WAY.

DATE MODIFIED: APRIL 2016

City of Rio Rancho
Department of Public Works

TYPICAL EXISTING SEWER LATERAL CONNECTION

DWG. NO. S-08 APRIL 22, 2016

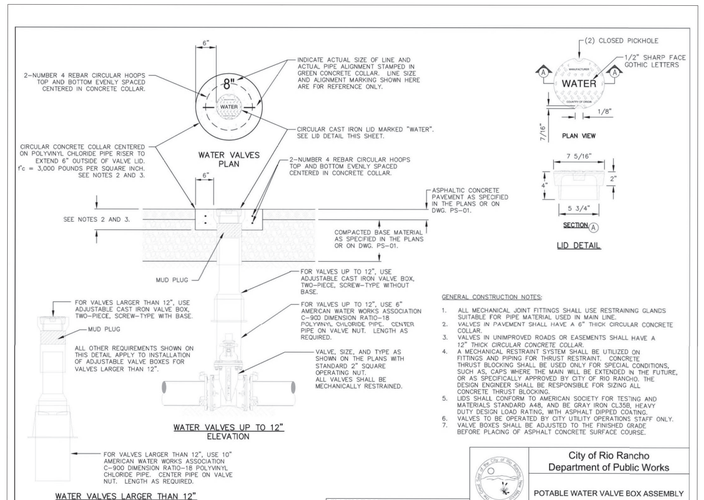

GENERAL CONSTRUCTION NOTES:

1. ALL MECHANICAL JOINT FITTINGS SHALL USE RESTRAINING GLANDS SUITABLE FOR PIPE MATERIAL USED IN MAIN LINE.
2. VALVES IN PAVEMENT SHALL HAVE A 6" THICK CIRCULAR CONCRETE COLLAR.
3. VALVES IN UNIMPROVED ROADS OR EASEMENTS SHALL HAVE A 12" THICK CIRCULAR CONCRETE COLLAR.
4. A MECHANICAL RESTRAINT SYSTEM SHALL BE UTILIZED ON FITTINGS AND PIPING FOR THRUST RESTRAINT. CONCRETE THRUST BLOCKING SHALL BE USED ONLY FOR SPECIAL CONDITIONS, SUCH AS, CAPS WHERE THE MAIN WILL BE EXTENDED IN THE FUTURE, OR AS SPECIFICALLY APPROVED BY CITY OF RIO RANCHO. THE CONTRACTOR SHALL BE RESPONSIBLE FOR SIZING ALL CONCRETE THRUST BLOCKS.
5. LIDS SHALL CONFORM TO AMERICAN SOCIETY FOR TESTING AND MATERIALS STANDARD A48, AND BE GRAY IRON CL35B, HEAVY DUTY DESIGN LOAD RATING, WITH ASPHALT DIPPED COATING.
6. VALVES TO BE OPERATED BY CITY UTILITY OPERATIONS STAFF ONLY.
7. VALVE BOXES SHALL BE ADJUSTED TO THE FINISHED GRADE BEFORE PLACING OF ASPHALT CONCRETE SURFACE COURSE.

DATE MODIFIED: OCTOBER 2017

City of Rio Rancho
Department of Public Works

POTABLE WATER VALVE BOX ASSEMBLY

DWG. NO. W-05 APRIL 22, 2016

A1 POTABLE WATER VALVE BOX ASSEMBLY
SCALE: NOT TO SCALE

G. DONALD DUDLEY AIA
ARCHITECT
ARCHITECTURE • INTERIORS • PLANNING
AIA • NCARB • LEED AP
SIMMS TOWER STUDIO 850
400 GOLD AVENUE SW
ALBUQUERQUE, NEW MEXICO 87102
TEL 505.243.8100

MERLYN A. MILLER II
NEW MEXICO
14507
4/13/2020
REGISTERED PROFESSIONAL ENGINEER

NEW BUILDING FOR:
RIO RANCHO SENIOR CENTER
CITY OF RIO RANCHO NEW MEXICO

MARK	DATE	DESCRIPTION

GDDA PROJECT NO: 18-137
DATE: 10/21/2019
DRAWN BY: MEC
CHECKED BY: VAM
SET NO:
SHEET TITLE: MISCELLANEOUS DETAILS
100% CD'S

C-502

GENERAL NOTES:

1. FOR ALL CITY OF RIO RANCHO STANDARD DRAWINGS, SEE LINK: https://rrnm.gov/539/Roads-Drainage-Traffic-Standard-Details.

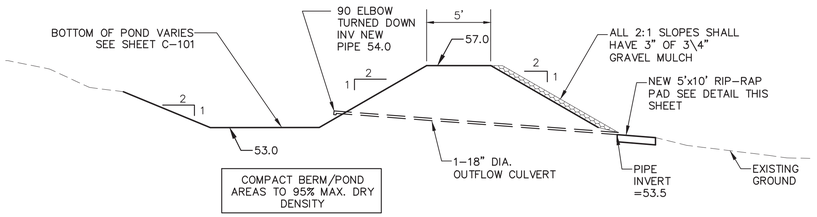

D1 TYPICAL WATER HARVEST AREA SECTION
SCALE: NOT TO SCALE

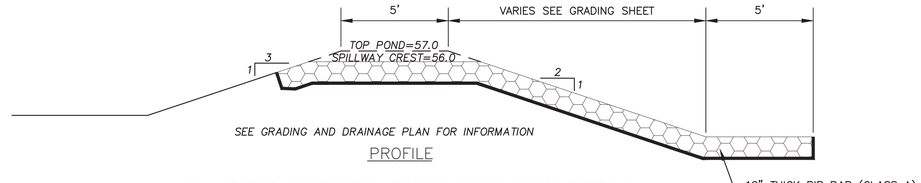

B1 RIP RAP EMERGENCY SPILLWAY DETAIL
SCALE: NOT TO SCALE

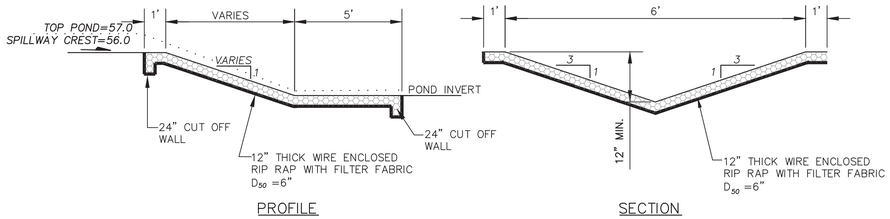

D3 RIP RAP RUNDOWN DETAIL
SCALE: NOT TO SCALE

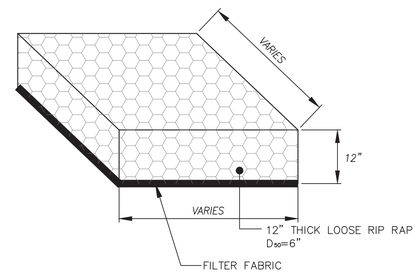

C4 CLASS 'B' RIP RAP PAD DETAIL
SCALE: NOT TO SCALE
SEE PLANS FOR SHAPE AND DIMENSIONS

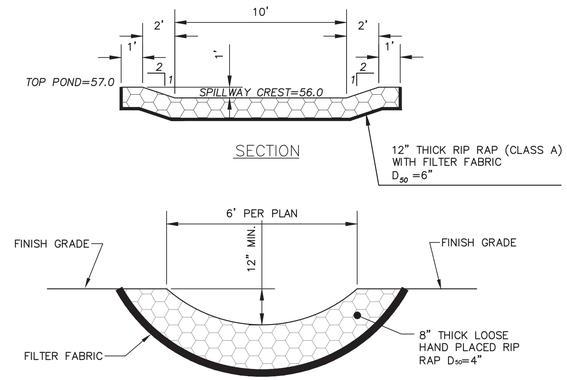

C3 RIP RAP SWALE DETAIL
SCALE: NOT TO SCALE

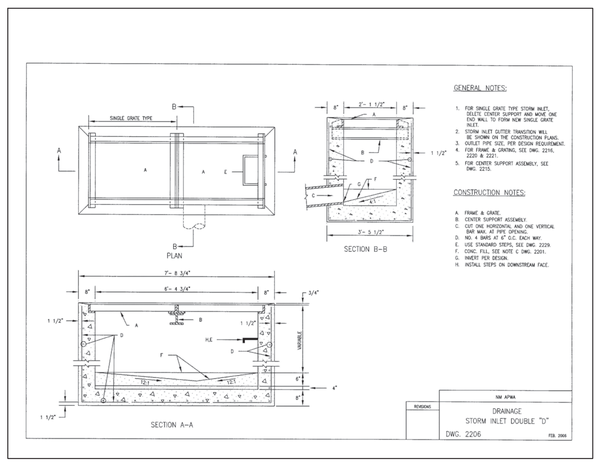

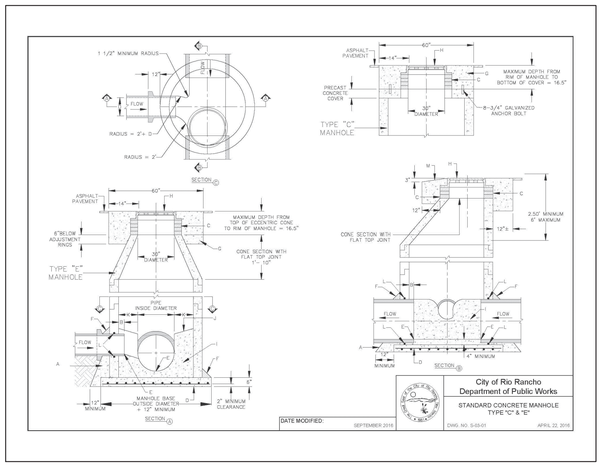

CONSTRUCTION NOTES:

A. CONCRETE PIPE SUPPORTS SHALL EXTEND OUTSIDE OF MANHOLE TO THE BELL OF FIRST JOINT AND SHALL CRADLE PIPE TO SPRINGLINE.

B. PIPE PENETRATION INTO MANHOLE SHALL BE FLUSH TO 2" MAXIMUM, MEASURED AT SPRINGLINE OF PIPE.

C. ADJUSTMENT RINGS MAY BE USED TO PROVIDE A MAXIMUM 12" ADJUSTMENT.

D. BASE TO BE POURED IN PLACE USING NUMBER 4 BARS AT 6" ON CENTER EACH WAY FOR MANHOLE DEPTH OF 16' OR GREATER. NUMBER 4 BARS AT 12" ON CENTER EACH WAY FOR MANHOLE LESS THAN 16" DEEP.

E. INVERT ELEVATION OF STUB OR LATERAL AS SHOWN ON PLANS.

F. 4" GROUT FILLET ON UPPER HALF OF PIPE AND AROUND BASE.

G. USE 18" ROUND COLLAR CONCRETE PAD IN ALL AREAS.

H. MANHOLE FRAME AND COVER, SEE DWG. S-02.

I. CONCRETE FILL SHALL HAVE A COMPRESSIVE STRENGTH OF 3,000 POUNDS PER SQUARE INCH AT 28 DAYS.

J. SLOPE 1" PER FOOT FROM PIPE CROWN.

K. SHELF SHALL HAVE MINIMUM WIDTH OF 8".

L. ALL WATERSTOP MATERIALS SHALL BE SUITABLE FOR THE TYPE OF PIPE USED.

M. IN UNPAVED AREAS, SET FRAME TO GRADE AND SLOPE TOP OF PAD.

GENERAL NOTES:

1. INSTALL NEOPRENE O-RING ON POLYVINYL CHLORIDE PIPE AND FILL ANNULAR SPACE WITH MORTAR TO PROVIDE A WATERTIGHT SEAL.
2. FOR PRESSURE TYPE MANHOLE COVER USE SAME AS SHOWN WITH EIGHT (8) 1/2" X 2" 316 STAINLESS STEEL HEXAGONAL HEAD BOLTS WITH A NEOPRENE GASKET. BOLT HOLES SHALL BE PREDRILLED IN COVER AND TAPPED IN FRAME. SEE DWG. S-02.
3. SANITARY SEWER SERVICES SHALL NOT BE ALLOWED IN MANHOLES.
4. IF THE SEWER MAIN AT A MANHOLE IS TO BE CONTINUED TO A FUTURE STREET, A 20' TUBOUT TO BE INSTALLED WITH CAP AND WITH 1% MINIMUM SLOPE.
5. IN UNIMPROVED AND UNPAVED ROADS, MANHOLE RIMS AND CONCRETE COLLARS ARE TO BE INSTALLED AT EXISTING ROAD GRADE.
6. IN NATURAL AREAS, ELEVATIONS OF MANHOLE RIMS AND CONCRETE SHALL BE INSTALLED 6" ABOVE NATURAL GROUND.
7. USE OF ADJUSTMENT RINGS ON MANHOLES IS LIMITED TO A MAXIMUM OF 12".
8. USE NON-SHRINK MORTAR INSIDE AND OUTSIDE OF MANHOLE BASE, USE NON-SHRINK GROUT FOR JOINTS, FILLETS, AND PIPE PENETRATIONS.
9. ALL MANHOLE BARREL JOINTS SHALL BE SEALED USING A PRODUCT SPECIFIED BY THE MANHOLE MANUFACTURER.
10. TYPE "E" MANHOLES SHALL NOT TO BE USED FOR DEPTHS LESS THAN 6', FOR DEPTHS LESS THAN 6' USE TYPE "C" MANHOLES. MEASURED FROM INVERT TO RIM.
11. MANHOLES GREATER THAN 18' IN DEPTH SHALL BE OF PRECAST CONCRETE SECTIONS ONLY.
12. DESIGN APPLIES TO 4" AND 6" INSIDE DIAMETER MANHOLES.
13. COMPACT ALL BACKFILL AROUND MANHOLES TO 95% AMERICAN SOCIETY FOR TESTING AND MATERIALS STANDARD D1557.
14. POSITION MANHOLES OFFSHIG OVER THE UPSTREAM SIDE OF MAIN LINE.
15. MANHOLES SHALL BE CAST-IN-PLACE OR PRECAST. BRICK MANHOLES ARE PROHIBITED.
16. STAMP MANHOLE COLLAR TO INDICATE DIRECTION OF FLOW WHILE CONCRETE IS GREEN.
17. STORM DRAIN MANHOLES SHALL HAVE STEPS.
18. AN INTERIOR COATING WITH A CITY APPROVED EPOXY RESIN-TYPE MATERIAL SHALL BE APPLIED TO MANHOLES ON MAINS 12" DIAMETER AND LARGER, FORCE MAIN MANHOLES, AND DROP MANHOLES. THE APPLICATION OF COATING SHALL BE IN ACCORDANCE WITH THE MANUFACTURER'S PUBLISHED RECOMMENDATIONS.

City of Rio Rancho
Department of Public Works
STANDARD CONCRETE MANHOLE
TYPE "C" & "E"
DATE MODIFIED: JUNE 2018
DWG. NO. S-03-02
APRIL 22, 2016

SIMMS TOWER STUDIO 850
400 GOLD AVENUE SW
ALBUQUERQUE, NEW MEXICO 87102
TEL 505.243.8100
G. DONALD DUDLEY AIA
ARCHITECT
ARCHITECTURE • INTERIORS • PLANNING
AIA • NCARB • LEED AP

VERLYN A. MILLER II
NEW MEXICO
14507
REGISTERED PROFESSIONAL ENGINEER
4/13/20

NEW BUILDING FOR:
RIO RANCHO SENIOR CENTER
CITY OF RIO RANCHO
NEW MEXICO

MARK	DATE	DESCRIPTION

GDDA PROJECT NO: 18-137
DATE: 10/21/2019
DRAWN BY: MEC
CHECKED BY: VAM
SET NO:
SHEET TITLE: MISCELLANEOUS DETAILS
100% CD'S

MILLER ENGINEERING CONSULTANTS
Engineers • Planners

C-503

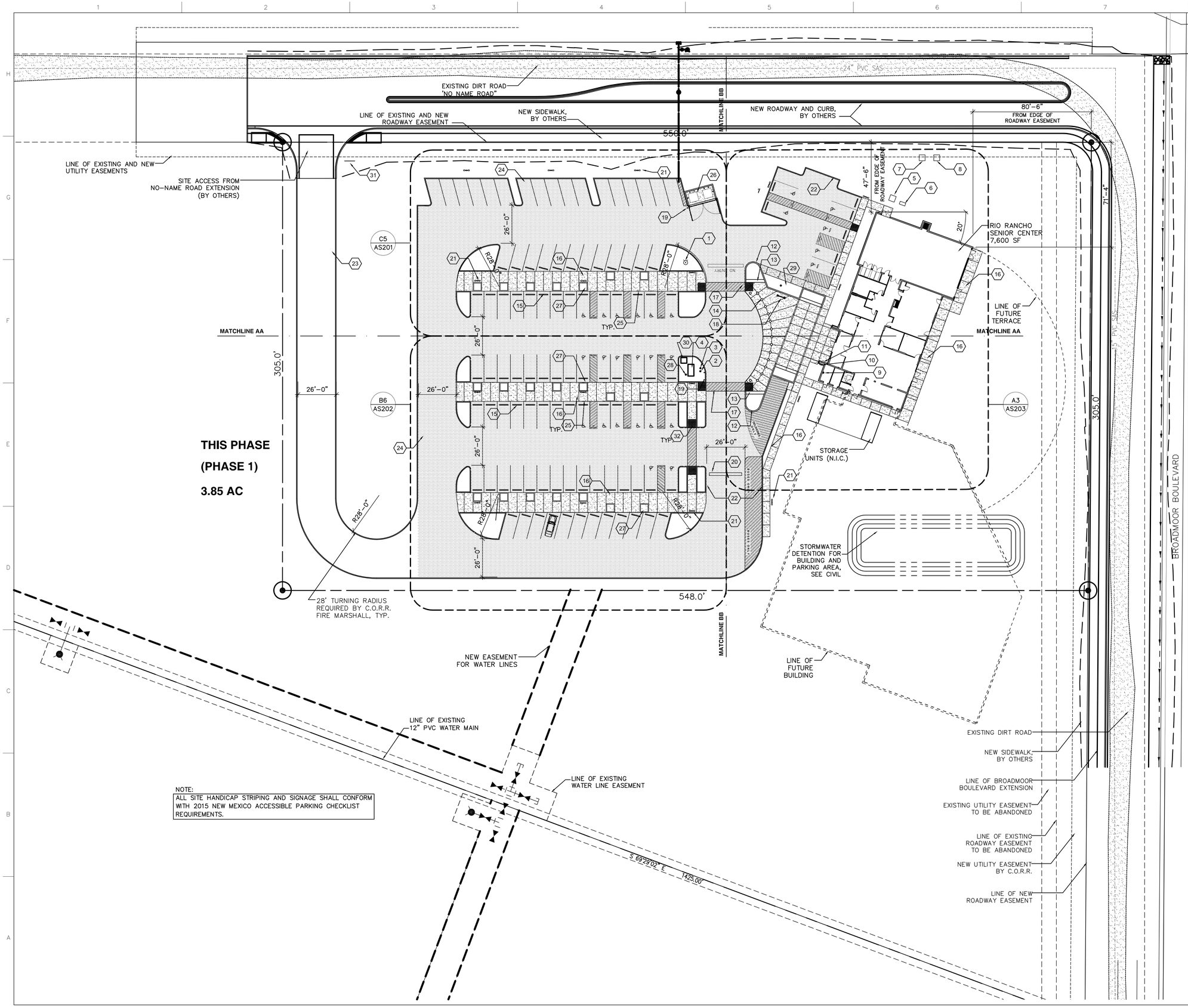

A6 SITE PLAN
1"=30'-0"

NORTH

GENERAL SHEET NOTES

A. DO NOT SCALE DRAWINGS.
B. CONTRACTOR TO COORDINATE ALL DRAWINGS PRIOR TO CONSTRUCTION.
C. VERIFY EXISTING CONDITIONS IN FIELD. BRING DISCREPANCIES TO ATTENTION OF ARCHITECT.
D. ALL PAVEMENT MARKINGS SHALL COMPLY WITH NMBC 1110.3
E. ALL CURB RAMPS TO BE BUILT PER CURRENT ADA STANDARDS FOR ACCESSIBLE DESIGN
F. PARKING CALCULATIONS BASED UPON RIO RANCHO MUNICIPAL CODE REQUIREMENTS.

PARKING REQUIREMENTS

CITY OF RIO RANCHO MUNICIPAL CODE
154.76 OFF-STREET PARKING REQUIREMENTS
MIXED-USES:
PLACES OF PUBLIC ASSEMBLY: 3688 SF/40=93 SPACES
RESTAURANT AREAS: 49 SEATS/4=13 SPACES
TOTAL PARKING SPACES REQUIRED: 106
PARKING SPACES PROVIDED: 106
ACCESSIBLE PARKING SPACES REQUIRED: 8 (2 VAN)
ACCESSIBLE PARKING SPACES PROVIDED: 23 (2 VAN)

SHEET KEYNOTES (#)

1. NEW FIRE HYDRANT, SEE CIVIL
2. F.D.C. FOR BUILDING
3. P.I.V.
4. STAINLESS STEEL HOT BOX CONTAINING:
   FIRE WATER R.P.B.P.
   DOMESTIC WATER R.P.B.P.
5. NEW ELECTRICAL TRANSFORMER (BY P.N.M.)
6. NEW GAS METER
7. NEW CATV PEDESTAL
8. NEW TELEPHONE PEDESTAL
9. FIRE SPRINKLER RISER
10. ELECTRIC MAIN DISCONNECT PANEL
11. FIREMANS KNOX BOX MOUNTED IN WALL
12. C.I.P. CONCRETE WALL, SEE SHEET AS203
13. C.I.P. CONCRETE BENCH, SEE SHEET AS203
14. PRE-CAST CONCRETE BOLLARD, 18" DIA. X 16" H, TYP., SMOOTH WHITE CONCRETE, SEE A5/AS203
15. PRECAST CONCRETE WHEEL STOP, SEE A2/AS202
16. CONCRETE SIDEWALK, SEE CIVIL
17. PAINTED PEDESTRIAN CROSSING
18. BICYCLE RACK, SEE SPECIFICATIONS
19. 8" DIA. STEEL PIPE BOLLARD, SEE A7/AS203
20. SPEED BUMP, SEE A1/AS202
21. POLE MOUNT LIGHT FIXTURE, SEE ELECTRICAL
22. CONCRETE CURB, SEE CIVIL
23. CRUSHED STONE PAVEMENT, SEE CIVIL
24. PAVEMENT, SEE CIVIL
25. ACCESSIBLE PARKING SIGN TO CONFORM WITH 2015 NM ACCESSIBLE PARKING CHECKLIST REQUIREMENTS. SEE A3/AS202
26. DUMPSTER ENCLOSURE (TRASH & RECYCLING) WITH 6" REINFORCED CONCRETE PAD, SEE AS201
27. 6'-0" SQUARE PLANTER WELL WITH CONCRETE CURB IN SIDEWALK, SEE A6/AS202
28. DOMESTIC WATER METER
29. FLAGPOLE WITH LED UPLIGHT
30. STAINLESS STEEL HOT BOX CONTAINING:
    LANDSCAPE IRRIGATION R.P.B.P.
31. STOP SIGN, SEE A3/AS202
32. IRON DETECTABLE WARNING PLATES MANUFACTURED BY NEENAH FOUNDRY

G. DONALD DUDLEY AIA
ARCHITECT
ARCHITECTURE • INTERIORS • PLANNING
AIA • NCARB • LEED AP
SIMMS TOWER STUDIO 850
400 GOLD AVENUE SW
ALBUQUERQUE, NEW MEXICO 87102
TEL 505.243.8100

STATE OF NEW MEXICO
G. DONALD DUDLEY, JR.
No. 3673
4/13/2020
REGISTERED ARCHITECT

NEW BUILDING FOR:
RIO RANCHO SENIOR CENTER
CITY OF RIO RANCHO
NEW MEXICO

MARK	DATE	DESCRIPTION

GDDA PROJECT NO: 18-137
DATE: 4/13/2020
DRAWN BY: gdd/pb
CHECKED BY: gdd/pb
SET NO:
SHEET TITLE: SITE PLAN

AS101

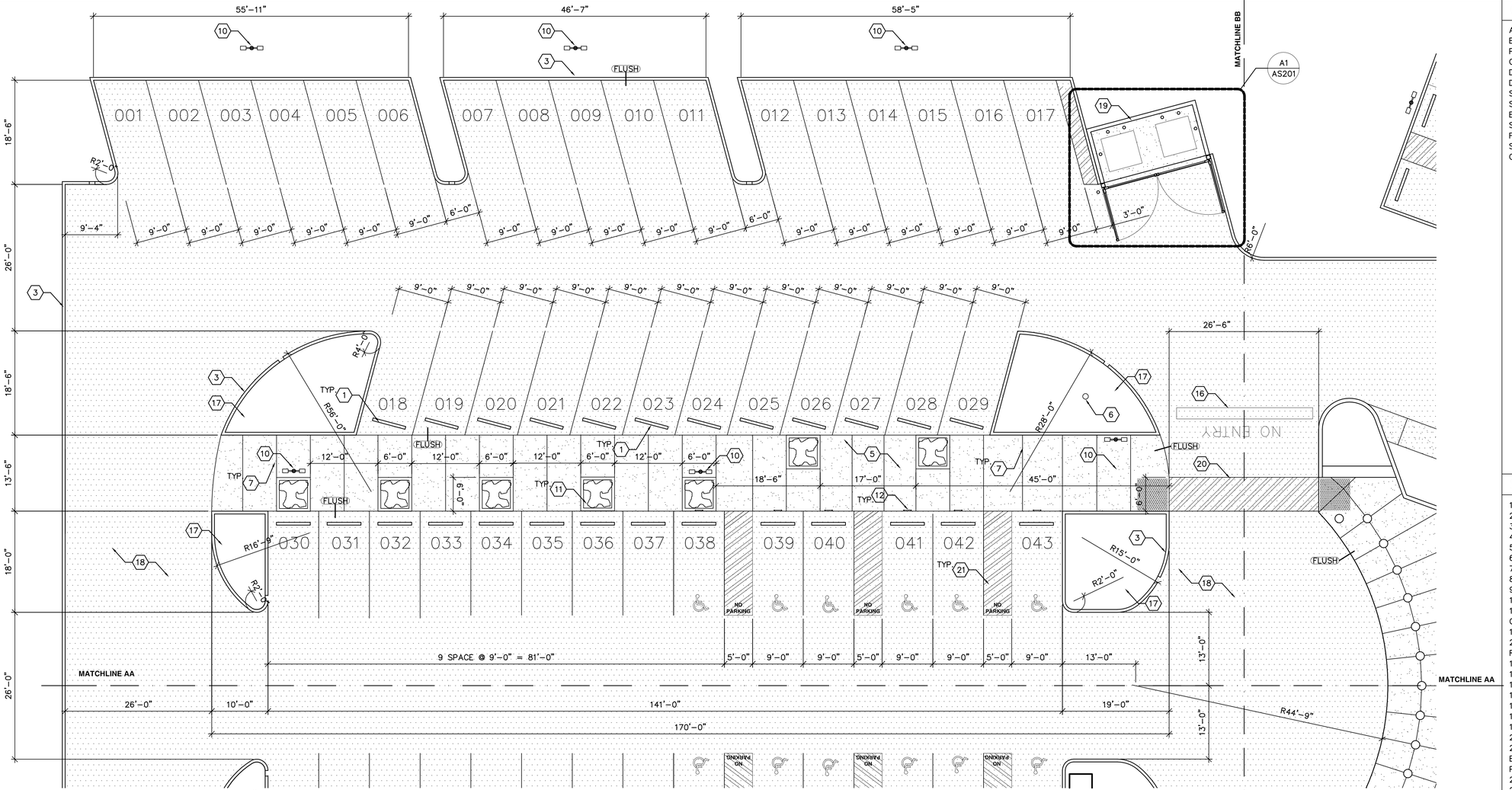

C5 ENLARGED SITE PLAN – NORTH
1"=10'-0"

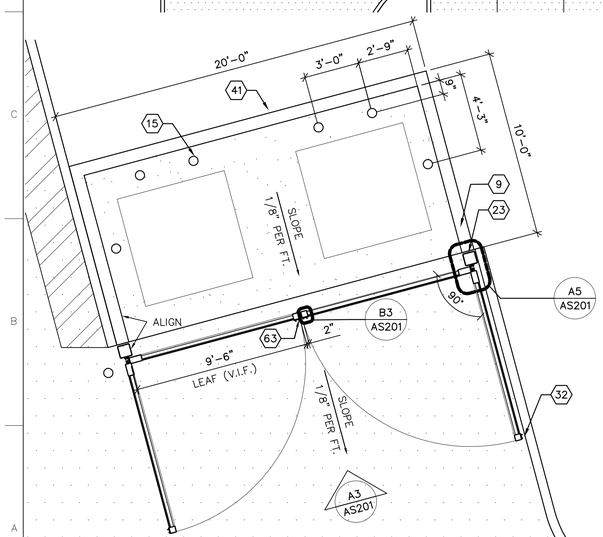

A1 DUMPSTER ENCLOSURE
1/4"=1'-0"

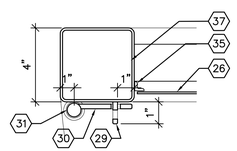

B3 LOCKING CANE BOLT
3"=1'-0"

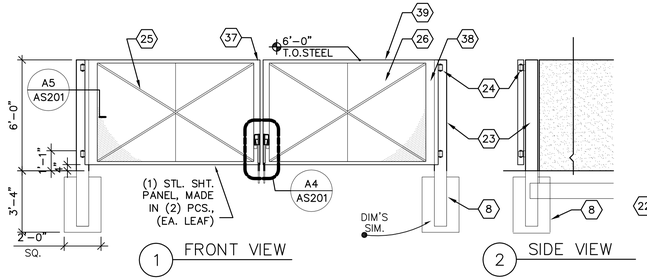

A3 DUMPSTER GATE ELEVATION
1/4"=1'-0"

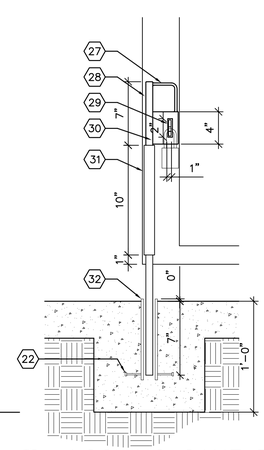

A4 LOCKING CANE BOLT
1 1/2"=1'-0"

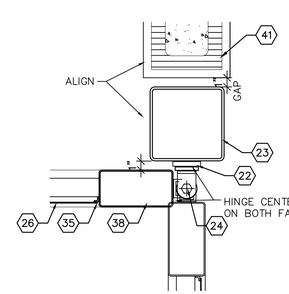

A5 HINGE POST
1 1/2"=1'-0"

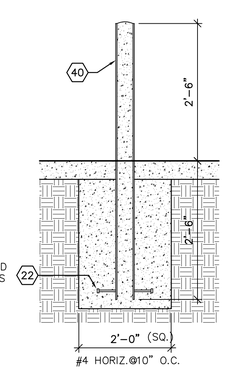

A7 STEEL BOLLARD
3/4"=1'-0"

GENERAL SHEET NOTES

A. DO NOT SCALE DRAWINGS.
B. CONTRACTOR TO COORDINATE ALL DRAWINGS PRIOR TO CONSTRUCTION.
C. VERIFY EXISTING CONDITIONS IN FIELD. BRING DISCREPANCIES TO ATTENTION OF ARCHITECT.
D. DEMOLITION DIMENSIONS ARE APPROXIMATE AND SHOULD BE CROSS-REFERENCED WITH CIVIL AND ARCH. SITE PRIOR TO EXECUTING WORK.
E. CONCRETE TO RECEIVE NO CHAMFERS OR RADII. SQUARE EDGES ONLY.
F. ALL CURB RAMPS TO BE BUILT PER CURRENT ADA STANDARDS FOR ACCESSIBLE DESIGN
G. — (FLUSH) INDICATES A FLUSH PAVING CONDITION

SHEET KEYNOTES

1. PRE-CAST CONCRETE WHEEL STOP, SEE A2/AS202
2. LIGHTING FIXTURE, SEE ELECTRICAL
3. CONCRETE CURB AND GUTTER, SEE CIVIL
4. HC PARKING SIGN, SEE A3/AS-202
5. CONCRETE PAVEMENT, SEE CIVIL
6. FIRE HYDRANT, SEE CIVIL
7. SAWED CONTROL JOINT
8. CONCRETE FOOTING, AS INDICATED
9. TEXTURED CONCRETE PAVEMENT AT DRIVE EDGE
10. ELECTRIC LIGHT POLE BASE, SEE ELEC.
11. 6'-0"x 6'-0" OPEN TREE PLANTER WITH CONCRETE CURB, SEE A6/AS-202
12. ACCESSIBLE PARKING SIGN TO CONFORM WITH 2015 NEW MEXICO ACCESSIBLE PARKING CHECKLIST REQUIREMENTS. SEE A3/AS202
13. NOT USED
14. NOT USED
15. STEEL BOLLARD, SEE A7/AS201
16. ASPHALT SPEED BUMP, SEE A1/AS202
17. LANDSCAPE AREA, SEE LANDSCAPE PLAN
18. ASPHALT PAVEMENT, SEE CIVIL
19. DUMPSTER ENCLOSURE, SEE A1/AS201
20. PAINTED PAVEMENT MARKING AS INDICATED
21. PAINTED ADA PAVEMENT MARKING, AS INDICATED, BLUE COLOR, PER 2015 NEW MEXICO ACCESSIBLE PARKING CHECKLIST REQUIREMENTS
22. NELSON STUD: ¾" DIAM. X 4" LONG, (4) PER POST
22. SHIM HINGE AS REQUIRED FOR FULL GATE SWING
23. POST: TS 8x8x1/4". STEEL CAP, FULLY WELDED AND GROUND SMOOTH. SET INTO CONCRETE FOOTING AS INDICATED.
24. HINGE: GUARDIAN 2000.150. CONT. FULL PEN. WELDED, ALL SIDES. UNFINISHED.
25. CROSS BRACING: TS2X1X11 GA. ALL JOINT CONNECTIONS MITERED, CONT. FULL PEN. WELDED AND GROUND SMOOTH.
26. PANEL: 14 GA. HOT ROLLED STEEL SHEET SHEARED AS INDICATED AND THEN WELDED ON THE "BACK" SIDE. 2" STITCH WELDS AT 8" O.C. AT PERIMETER ANGLE IRON AND AT TS CROSS BRACING ON BACK SIDES (WHERE APPLICABLE).
27. ¾" SOLID ROD HANDLE WELDED TO LOCK PLATE.
28. ¾" DIAM. SOLID STEEL CANE BOLT.
29. 1¾" X 1¾" X ¼" PLATE STEEL TAB WITH ½" DIAM. HOLE FOR PAD LOCK. WELD TO GATE FRAME.
30. 3 X 3½" X ¼" STEEL LOCK PLATE WITH ½" WIDE SLOT. WELDED TO STEEL CANE BOLT.
31. 1" DIAM. STEEL SLEEVE WELDED TO GATE FRAME.
32. IN-GRADE RECEIVER: STEEL PIPE (W/ STUDS) OF SUFFICIENT DIAM. TO RECEIVER CANE BOLT. PROVIDE FOR GATE IN BOTH OPEN AND CLOSED POSITIONS.
33. 2X2X11GA CROSS TUBE FULLY WELDED AND GROUND SMOOTH.
34. 2X TUBE STEEL WELDED TO GATE FRAME. SIZE AS REQUIRED BY GATE HARDWARE (2X5 DRAWN).
35. PERIMETER ANGLE: L ½"X½"X⅛" TO HOLD GATE PANEL CONTINUOUS AT PERIMETER, MITER CORNERS. CONT. WELD.
36. GATE HOLD BACK, SEE DETAIL
37. 4X4X11GA GATE FRAME.
38. 4X8X11GA GATE FRAME
39. 4X2X11GA GATE FRAME
40. 6" DIA. STEEL BOLLARD, FILL WITH CONCRETE
41. 8" CMU SITE WALL WITH STUCCO FINISH, SEE F5/AS203

SIMMS TOWER STUDIO 850
400 GOLD AVENUE SW
ALBUQUERQUE, NEW MEXICO 87102
TEL 505.243.8100

G. DONALD DUDLEY AIA
ARCHITECT
ARCHITECTURE • INTERIORS • PLANNING
AIA • NCARB • LEED AP

STATE OF NEW MEXICO
G. DONALD DUDLEY, JR.
No. 3673
4/13/2020
REGISTERED ARCHITECT

NEW BUILDING FOR:

RIO RANCHO SENIOR CENTER

CITY OF RIO RANCHO NEW MEXICO

MARK	DATE	DESCRIPTION

GDDA PROJECT NO: 18-137

DATE: 4/13/2020

DRAWN BY: gdd/pb

CHECKED BY: gdd/pb

SET NO:

SHEET TITLE: ENLARGED SITE PLAN & DETAILS

AS201

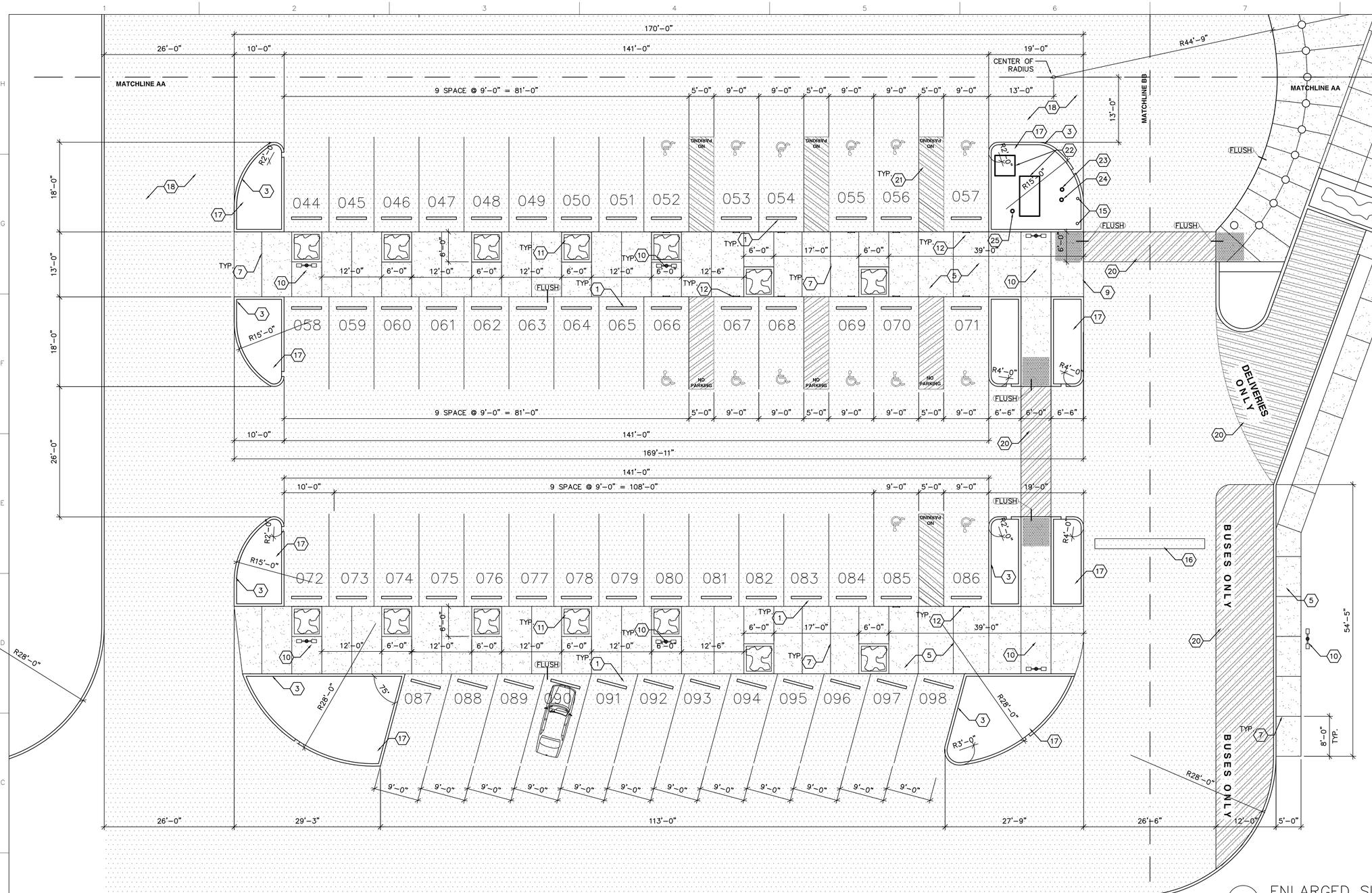

B6 ENLARGED SITE PLAN – SOUTH
1"=10'-0"

GENERAL SHEET NOTES

A. DO NOT SCALE DRAWINGS.
B. CONTRACTOR TO COORDINATE ALL DRAWINGS PRIOR TO CONSTRUCTION.
C. VERIFY EXISTING CONDITIONS IN FIELD. BRING DISCREPANCIES TO ATTENTION OF ARCHITECT.
D. DEMOLITION DIMENSIONS ARE APPROXIMATE AND SHOULD BE CROSS-REFERENCED WITH CIVIL AND ARCH. SITE PRIOR TO EXECUTING WORK.
E. CONCRETE TO RECEIVE NO CHAMFERS OR RADII. SQUARE EDGES ONLY.
F. ALL CURB RAMPS TO BE BUILT PER CURRENT ADA STANDARDS FOR ACCESSIBLE DESIGN
G. — (FLUSH) INDICATES A FLUSH PAVING CONDITION

SHEET KEYNOTES

1. PRE-CAST CONCRETE WHEEL STOP, SEE A2/AS-202
2. AGGREGATE BASE COURSE, SEE CIVIL
3. CONCRETE CURB AND GUTTER, SEE CIVIL
4. HC PARKING SIGN, SEE A3/AS-202
5. AIR-ENTRAINED CONCRETE PAVEMENT, SEE CIVIL
6. FIRE HYDRANT, SEE CIVIL
7. SAWED CONTROL JOINT
8. CONCRETE FOOTING, AS INDICATED
9. TEXTURED CONCRETE PAVEMENT AT DRIVE EDGE
10. ELECTRIC LIGHT POLE BASE, SEE ELEC.
11. 6'-0"x 6'-0" OPEN TREE PLANTER WITH CONCRETE CURB, SEE A6/AS-202
12. ACCESSIBLE PARKING SIGN TO CONFORM WITH 2015 NEW MEXICO ACCESSIBLE PARKING CHECKLIST REQUIREMENTS. SEE A3/AS202
13. SCARIFY AND BRING COMPACTION OF EXISTING SOILS TO 95% MODIFIED PROCTOR FOR DEPTH OF 12"
14. #4 REBAR CONTINUOUS HORIZONTAL
15. STEEL BOLLARD, SEE A7/AS203
16. ASPHALT SPEED BUMP, SEE A1/AS202
17. LANDSCAPE AREA, SEE LANDSCAPE PLAN
18. ASPHALT PAVEMENT, SEE CIVIL
19. NOT USED
20. PAINTED PAVEMENT MARKING AS INDICATED
21. PAINTED ADA PAVEMENT MARKING, AS INDICATED, BLUE COLOR, PER CODE REQUIREMENT
22. HOT BOX
23. P.I.V.
24. F.D.C FOR BUILDING
25. DOMESTIC WATER METER
26. GEO-TEXTILE FABRIC
27. GRAVEL DRAINAGE BED: OVER-EX. 48" UNDER PLANTER AND FILL WITH 1 1/2" ROUND WASHED GRAVEL UP TO TOP OF FOOTING
28. EXPANSION JOINT AND SELF-LEVELING SEALANT

SIMMS TOWER STUDIO 850
400 GOLD AVENUE SW
ALBUQUERQUE, NEW MEXICO 87102
TEL 505.243.8100

G. DONALD DUDLEY AIA
ARCHITECT
ARCHITECTURE • INTERIORS • PLANNING
AIA • NCARB • LEED AP

STATE OF NEW MEXICO
G. DONALD DUDLEY, JR.
No. 3673
4/13/2020
REGISTERED ARCHITECT

NEW BUILDING FOR:
RIO RANCHO SENIOR CENTER
CITY OF RIO RANCHO NEW MEXICO

MARK	DATE	DESCRIPTION

GDDA PROJECT NO: 18-137
DATE: 4/13/2020
DRAWN BY: gdd/pb
CHECKED BY: gdd/pb
SET NO:
SHEET TITLE: ENLARGED SITE PLAN & DETAILS

AS202

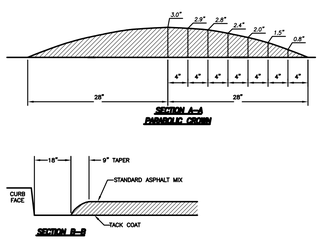

A1 TYP. SPEED BUMP

NOTE:
CONTROL SIGNS SHALL CONFORM TO U.S. DEPARTMENT OF TRANSPORTATION, FEDERAL HIGHWAY ADMINISTRATION MANUAL ON UNIFORM TRAFFIC CONTROL DEVICES.
HC SIGNS SHALL MEET NMBC 1110.0 AND ANSI 502.7 AND 2015 NEW MEXICO ACCESSIBLE PARKING CHECKLIST REQUIREMENTS

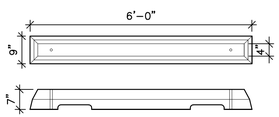

A2 PRECAST CONC. WHEEL STOP
1/2"=1'-0"

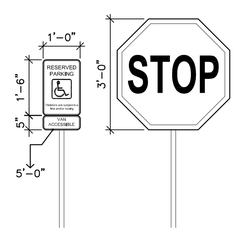

A3 TRANSPORTATION SIGNAGE
1/2"=1'-0"

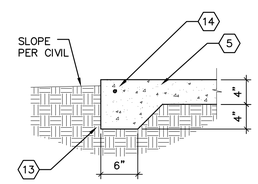

A4 SIDEWALK EDGE
1"=1'-0"

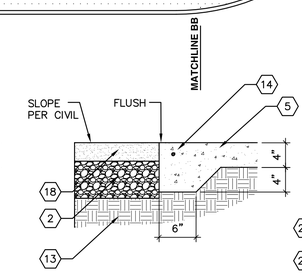

A5 SIDEWALK EDGE
1"=1'-0"

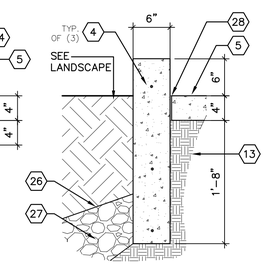

A6 CURB@PLANTER
1"=1'-0"

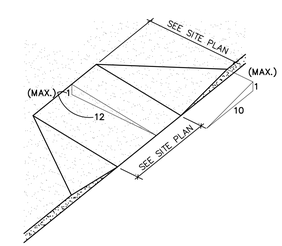

A7 TYP. RAMP
n.t.s.

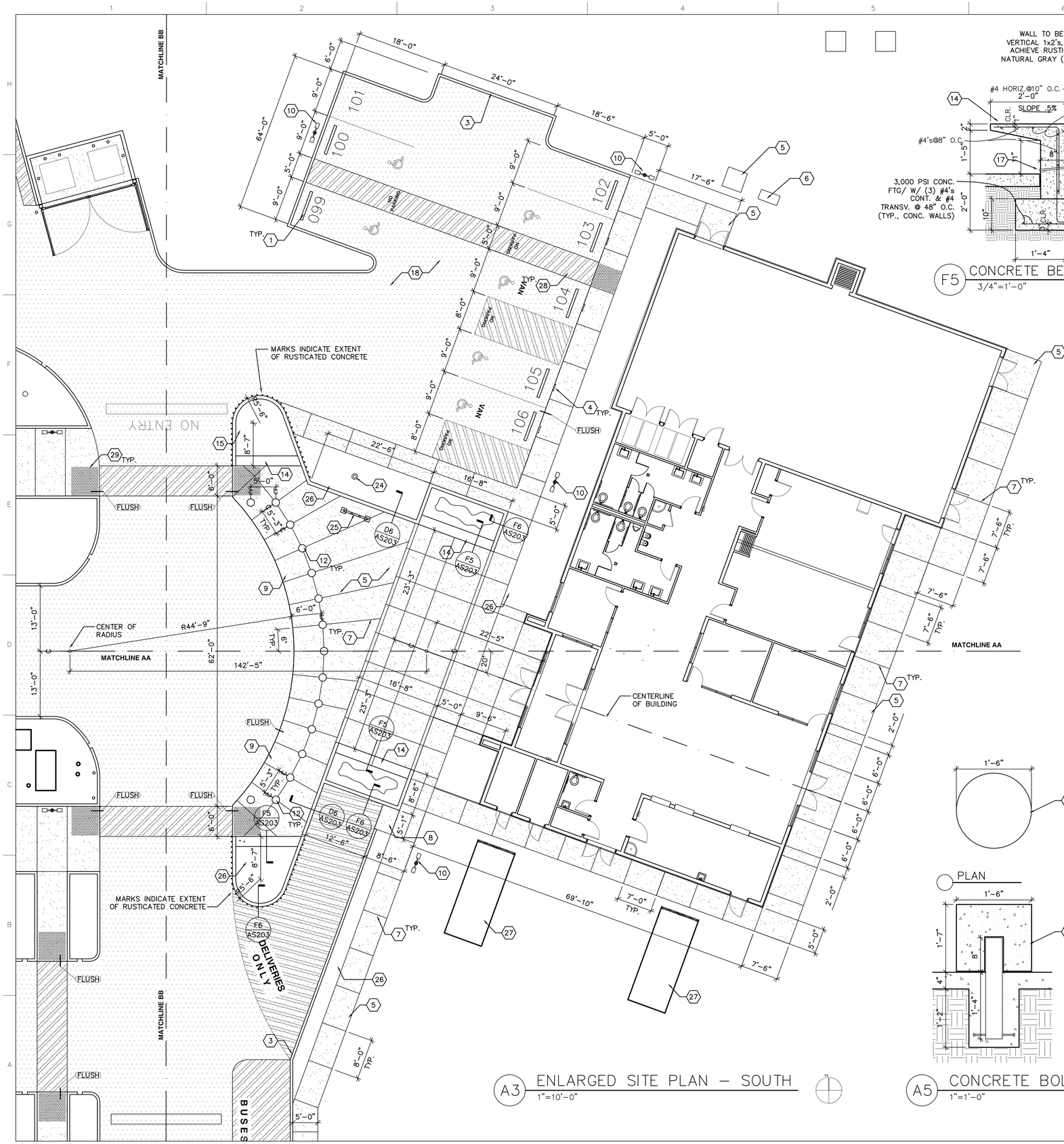

A3 ENLARGED SITE PLAN – SOUTH
1"=10'-0"

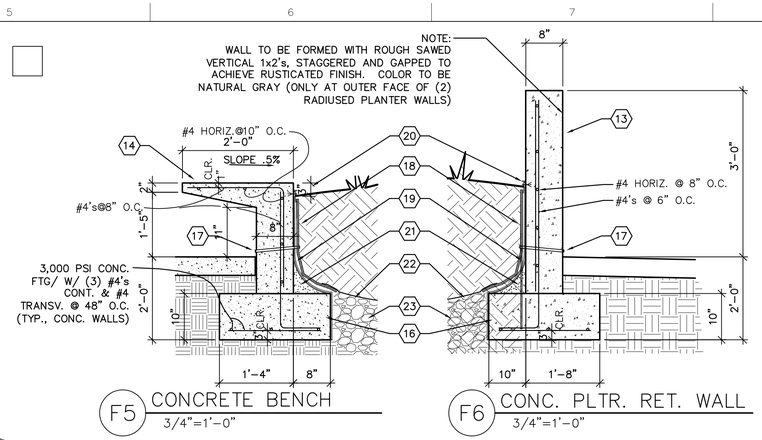

F5 CONCRETE BENCH
3/4"=1'-0"

F6 CONC. PLTR. RET. WALL
3/4"=1'-0"

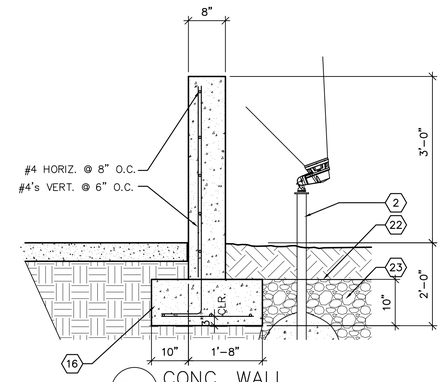

D6 CONC. WALL
3/4"=1'-0"

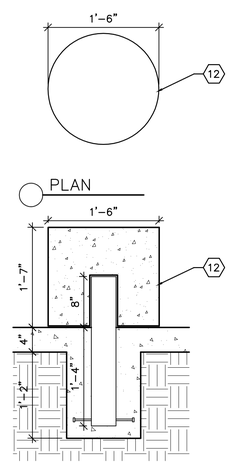

A5 CONCRETE BOLLARD
1"=1'-0"

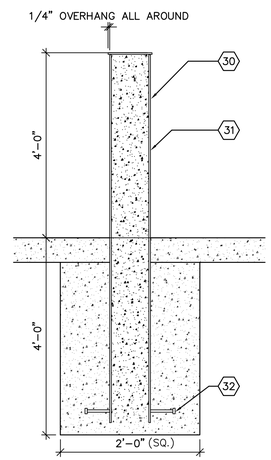

A7 STEEL BOLLARD
1"=1'-0"

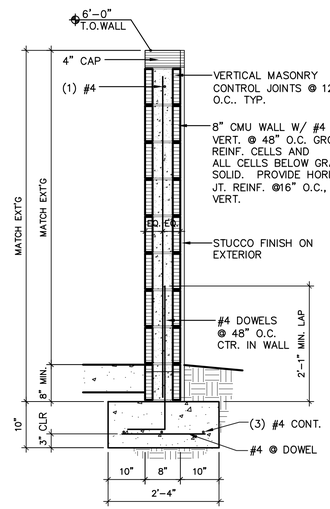

F5 CMU WALL
3/4"=1'-0"

GENERAL SHEET NOTES

A. DO NOT SCALE DRAWINGS.
B. CONTRACTOR TO COORDINATE ALL DRAWINGS PRIOR TO CONSTRUCTION.
C. VERIFY EXISTING CONDITIONS IN FIELD. BRING DISCREPANCIES TO ATTENTION OF ARCHITECT.
D. DEMOLITION DIMENSIONS ARE APPROXIMATE AND SHOULD BE CROSS-REFERENCED WITH CIVIL AND ARCH. SITE PRIOR TO EXECUTING WORK.
E. CONCRETE TO RECEIVE NO CHAMFERS OR RADII. SQUARE EDGES ONLY.
F. ALL CURB RAMPS TO BE BUILT PER CURRENT ADA STANDARDS FOR ACCESSIBLE DESIGN
G. — (FLUSH) INDICATES A FLUSH PAVING CONDITION

SHEET KEYNOTES

1. PARKING BUMPER, SEE A1/AS202
2. LIGHTING FIXTURE, SEE ELECTRICAL
3. CONCRETE CURB AND GUTTER, SEE CIVIL
4. HC PARKING SIGN, SEE A6/AS-202
5. ELECTRICAL TRANSFORMER PAD, SEE ELECTRICAL
6. GAS METER, SEE CIVIL
7. SAWED CONTROL JOINT
8. ADA CURB RAMP
9. not used
10. ELECTRIC LIGHT POLE BASE, SEE ELEC.
11. 6'-0"x 6'-0" OPEN TREE PLANTER WITH CONCRETE CURB
12. PRE-CAST CONC. BOLLARD: 18"DIAMx16"HIGH, SMOOTH WHITE CONCRETE, NO CHAMFERS OR RADII. CORNERS RUBBED. 4" CAST-OUT FOR PLACEMENT OF 3.5" O.D. PIPE EMBEDDED IN CONC. W/ NELSON STUDS AS INDICATED, SEE A5/AS203
13. C.I.P. CONC. WALL, SEE F6/AS203
14. C.I.P. CONC. BENCH, SEE F5/AS203
15. C.I.P. CONC. WALL, SEE DETAILS THIS SHEET
16. CONCRETE FOOTING, AS INDICATED
17. 1/2" DIAM. WEEP PIPE AS INDICATED,48" O.C., SET IN SEALANT.
18. WATERPROOFING: GRACE BITUTHANE 3000 MEMBRANE OVER BITUTHANE PRIMER WP-3000. APPLY FROM TERM. BAR DOWN TO MID-POINT OF FOOTING.
19. ASPHALTIC PROTECTION BOARD.
20. RADIUSED TERMINATION BAR SET IN SEALANT
21. PARGED CORNER
22. GEO-TEXTILE FABRIC
23. GRAVEL DRAINAGE BED: OVER-EX. 48" UNDER PLANTER AND FILL WITH 1 1/2" ROUND WASHED GRAVEL UP TO TOP OF FOOTING
24. FLAGPOLE WITH UP LIGHT, SEE SPECIFICATIONS AND ELECTRICAL
25. BICYCLE RACK, SEE SPEC'S
26. PLANTING BED, SEE LANDSCAPE
27. STORAGE CONTAINER, N.I.C.
28. PAINTED ADA PAVEMENT MARKING, AS INDICATED, BLUE COLOR, PER 2015 NEW MEXICO ACCESSIBLE
29. IRON DETECTABLE WARNING PLATES MANUFACTURED BY NEENAH FOUNDRY
30. FILL BOLLARD W/ CONC., THEN WELD 1/4" P CAP. PLASMA CUT CAP, GRIND EDGE SMOOTH
31. 8" DIAM. SCHED. 80 PIPE. STEEL CAP, FULLY WELDED AND GROUND SMOOTH. SET INTO CONCRETE FOOTING AS INDICATED
32. NELSON STUD: 3/4" DIAM. x 4" LONG, (4) PER POST

SIMMS TOWER STUDIO 850
400 GOLD AVENUE SW
ALBUQUERQUE, NEW MEXICO 87102
TEL 505.243.8100

G. DONALD DUDLEY AIA
ARCHITECT
ARCHITECTURE • INTERIORS • PLANNING
AIA • NCARB • LEED AP

STATE OF NEW MEXICO
G. DONALD DUDLEY, JR.
No. 3673
4/13/2020
REGISTERED ARCHITECT

NEW BUILDING FOR:

RIO RANCHO SENIOR CENTER

CITY OF RIO RANCHO
NEW MEXICO

MARK	DATE	DESCRIPTION

GDDA PROJECT NO: 18-137
DATE: 4/13/2020
DRAWN BY: gdd/pb
CHECKED BY: gdd/pb
SET NO:
SHEET TITLE: ENLARGED SITE PLAN & DETAILS

AS203

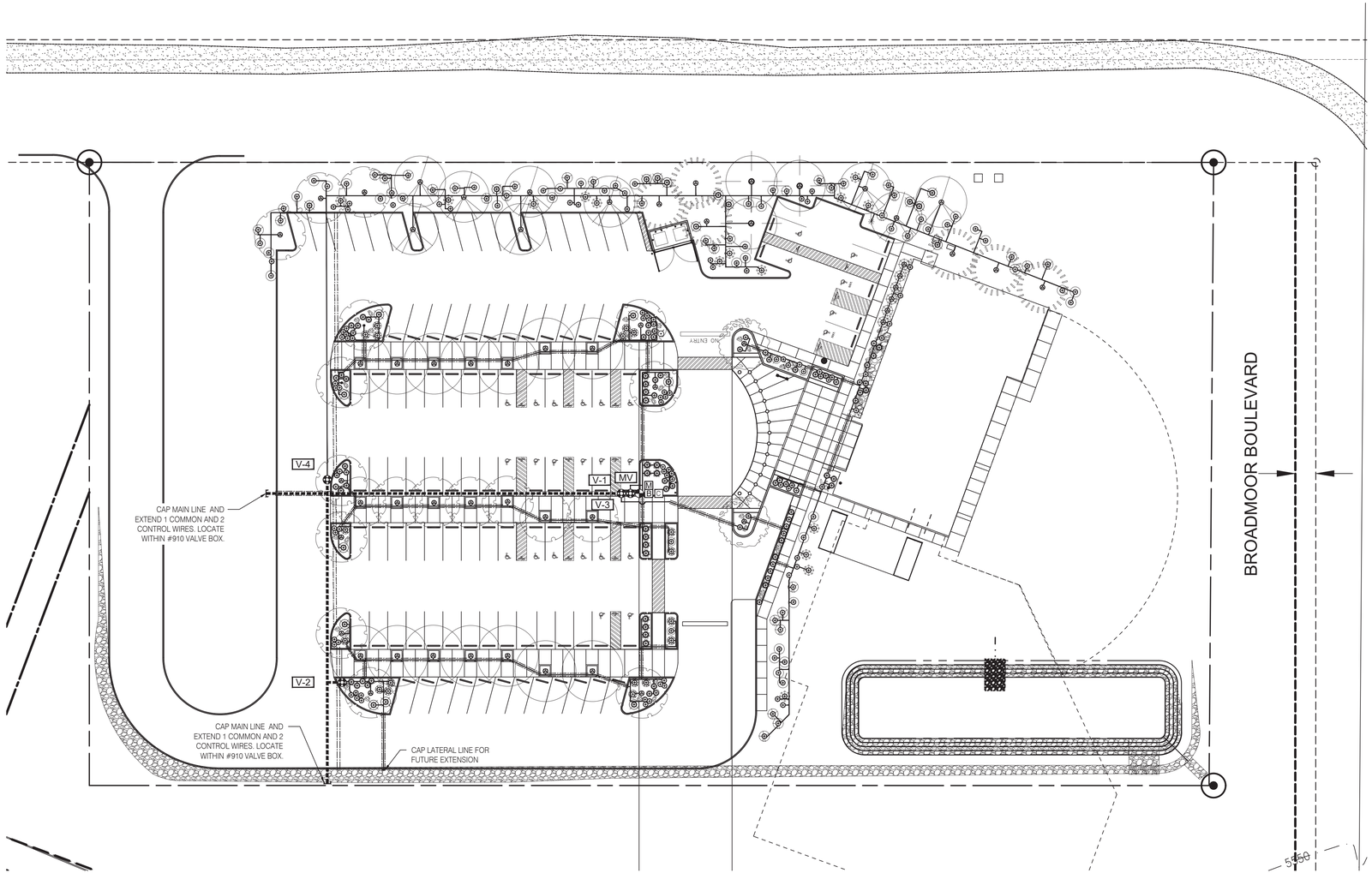

IRRIGATION EQUIPMENT SCHEDULE

SYMBOL	DESCRIPTION
M	METER: 1-1/2", SEE UTILITY PLAN
B	BACKFLOW PREVENTER: FEBCO 825Y (1-1/2") REDUCED PRESSURE BACKFLOW PREVENTER IN SAFE-T-COVER 200S-AL ALUMINUM ENCLOSURE (COLOR: BRUSHED ALUMINUM). CONTRACTOR TO PROVIDE ELECTRICAL POWER TO ENCLOSURE.
	SLEEVING: CLASS 200 PVC (2 SIZES LARGER THAN PIPE TO BE SLEEVED).
	IRRIGATION MAINLINE: SCHEDULE 40 PVC SOLVENT WELD (2").
	LATERAL PIPING: SCHEDULE 40 PVC SOLVENT WELD, 3/4" MIN. - SIZE PER CHART BELOW.
	AIR RELEASE VALVE ASSEMBLY: CRISPIN A-20, OR EQUAL.
	FLOW METER/MASTER VALVE: ARAD HYDROMETER BM (1.5").
	VALVE ASSEMBLY: RAINBIRD PEB SERIES PLASTIC ELECTRIC VALVE WITH FLOW CONTROL.
	MANUAL ISOLATION VALVE ASSEMBLY: SPEARS SCH. 80 PVC BALL VALVE WITH UNIONS, (SIZE PER LINE).
	BUBBLER ASSEMBLY: RAIN BIRD 1401 PRESSURE COMPENSATING, TRICKLE PATTERN BUBBLER (.25 GPM @ 30 PSI).
	TREE BUBBLER (3 BUBBLERS PER TREE).
	NOTE: BUBBLERS ON SLOPES GREATER THAN 6:1 SHALL BE PROVIDED WITH A CHECK VALVE (RAINBIRD OR EQUAL).
C	CONTROLLER: RAIN BIRD ESP12LXME (12 STATION). CONTROLLER SHALL BE INSTALLED IN RAIN BIRD LXMMSS HEAVY DUTY STAINLESS STEEL ENCLOSURE WITH RAIN BIRD LXMMSSPED PEDESTAL (POWDER COATED, COLOR: DESERT TAN). CONTRACTOR TO PROVIDE ELECTRICAL POWER TO CONTROLLER.
V-X	INDICATES VALVE NUMBER.

VALVE LEGEND & SCHEDULE

ID	SIZE	SPK TYPE	FLOW	PRECIP. RATE	RUNTIME
V-1	1.5"	BUBBLER	33.25 GPM	.25/.75 GPM	12 MIN
V-2	1.5"	BUBBLER	17.50+ GPM	.25/.50 GPM	12 MIN
V-3	1.5"	BUBBLER	26.00+ GPM	.25/.75 GPM	12 MIN
V-4	1.5"	BUBBLER	33.00 GPM	.25/.75 GPM	12 MIN
V-5	X	FUTURE	X GPM	X	X
V-6	X	FUTURE	X GPM	X	X
MV	1.5"	MASTER VALVE	33.00 GPM	N/A	N/A
			TOTAL RUNTIME:		0 HR 48 MIN

PIPE SIZE CHART	
¾"	0-6 GPM
1"	6-12 GPM
1¼"	12-18 GPM
1½	18-24 GPM
2"	24-40 GPM
2½"	40-60 GPM
3"	60-90 GPM

STATION RUNTIMES ARE CALCULATED TO APPLY 3 GALLONS OF WATER PER SHRUB AND 9 GALLONS OF WATER PER TREE PER IRRIGATION CYCLE.

GENERAL IRRIGATION NOTES

1. THE SYSTEM DESIGN ASSUMES A MINIMUM STATIC PRESSURE OF 60 PSI AT THE 1-1/2-INCH POINT-OF-CONNECTION. THE IRRIGATION CONTRACTOR SHALL VERIFY PRESSURE AND FLOW ON SITE PRIOR TO CONSTRUCTION.
2. THE IRRIGATION CONTRACTOR SHALL BECOME THOROUGHLY FAMILIAR WITH THE SPECIFICATIONS FOR THIS AND RELATED WORK PRIOR TO CONSTRUCTION.
3. THE IRRIGATION CONTRACTOR SHALL DETERMINE THE EXACT LOCATION OF UNDERGROUND UTILITIES AND ELECTRICAL WIRING PRIOR TO CONSTRUCTION.
4. THE IRRIGATION CONTRACTOR SHALL NOT INSTALL THE SPRINKLER SYSTEM WHEN IT IS OBVIOUS IN THE FIELD THAT OBSTRUCTIONS OR GRADE DIFFERENCES EXIST THAT MIGHT NOT HAVE BEEN CONSIDERED IN THE ENGINEERING, OR IF THE DISCREPANCIES IN CONSTRUCTION DETAILS, LEGEND, NOTES, OR SPECIFICATIONS ARE DISCOVERED. ALL SUCH OBSTRUCTIONS OR DISCREPANCIES SHALL BE BROUGHT TO THE ATTENTION OF THE OWNER'S REPRESENTATIVE.
5. THE DRAWINGS ARE DIAGRAMMATIC. IN SOME CASES, IRRIGATION COMPONENTS MAY BE SHOWN OUTSIDE OF PLANTING AREAS FOR CLARITY. THE IRRIGATION CONTRACTOR SHALL AVOID ANY CONFLICTS BETWEEN THE IRRIGATION SYSTEM, PLANTING MATERIALS, AND ABOVE GROUND UTILITIES. IRRIGATION PIPE AND WIRING SHALL BE INSTALLED IN LANDSCAPED AREAS WHENEVER POSSIBLE.
6. GENERAL CONTRACTOR IS RESPONSIBLE FOR INSTALLATION OF SLEEVES AS INDICATED ON THE DRAWING. EXTEND SLEEVES 2' BEYOND BACK OF CURB AND CAP UNTIL CONTRACTOR IS READY TO BEGIN THE INSTALLATION OF SPRINKLER SYSTEM. STAKE LOCATION OF SLEEVE WITH T-POSTS AND FLAGS.
7. CONTRACTOR SHALL CLOSELY FOLLOW THESE CONTRACT DRAWINGS, THE IRRIGATION SPECIFICATIONS, AND THE SPECIFIED RECOMMENDATIONS OF THE EQUIPMENT MANUFACTURERS TO INSURE PROPER INSTALLATION OF THE IRRIGATION SYSTEM. CONTRACTOR SHALL IMMEDIATELY CONSULT WITH THE OWNER WHENEVER THERE APPEARS TO BE A CONFLICT BETWEEN ANY OF THE ABOVE STATED DOCUMENTS.

SCALE: 1" = 30'

NORTH 15 0 30 60

CONSENSUS PLANNING, INC.
Planning / Landscape Architecture
302 Eighth Street NW
Albuquerque, NM 87102
(505) 764-9801 Fax 842-5495

G. DONALD DUDLEY AIA
ARCHITECT
ARCHITECTURE • INTERIORS • PLANNING
AIA • NCARB • LEED AP
SIMMS TOWER STUDIO 850
400 GOLD AVENUE SW
ALBUQUERQUE, NEW MEXICO
87102
TEL 505.243.8100

STATE OF NEW MEXICO
CHRISTOPHER J. GREEN
#234
REGISTERED LANDSCAPE ARCHITECT

NEW BUILDING FOR:
RIO RANCHO
SENIOR CENTER
CITY OF RIO RANCHO
NEW MEXICO

MARK	DATE	DESCRIPTION

GDDA PROJECT NO: 18–137
DATE: 4/1/2020
DRAWN BY: AM
CHECKED BY: CG
SET NO:
SHEET TITLE: IRRIGATION PLAN
100 % CONSTRUCTION DOCUMENTS

L-101

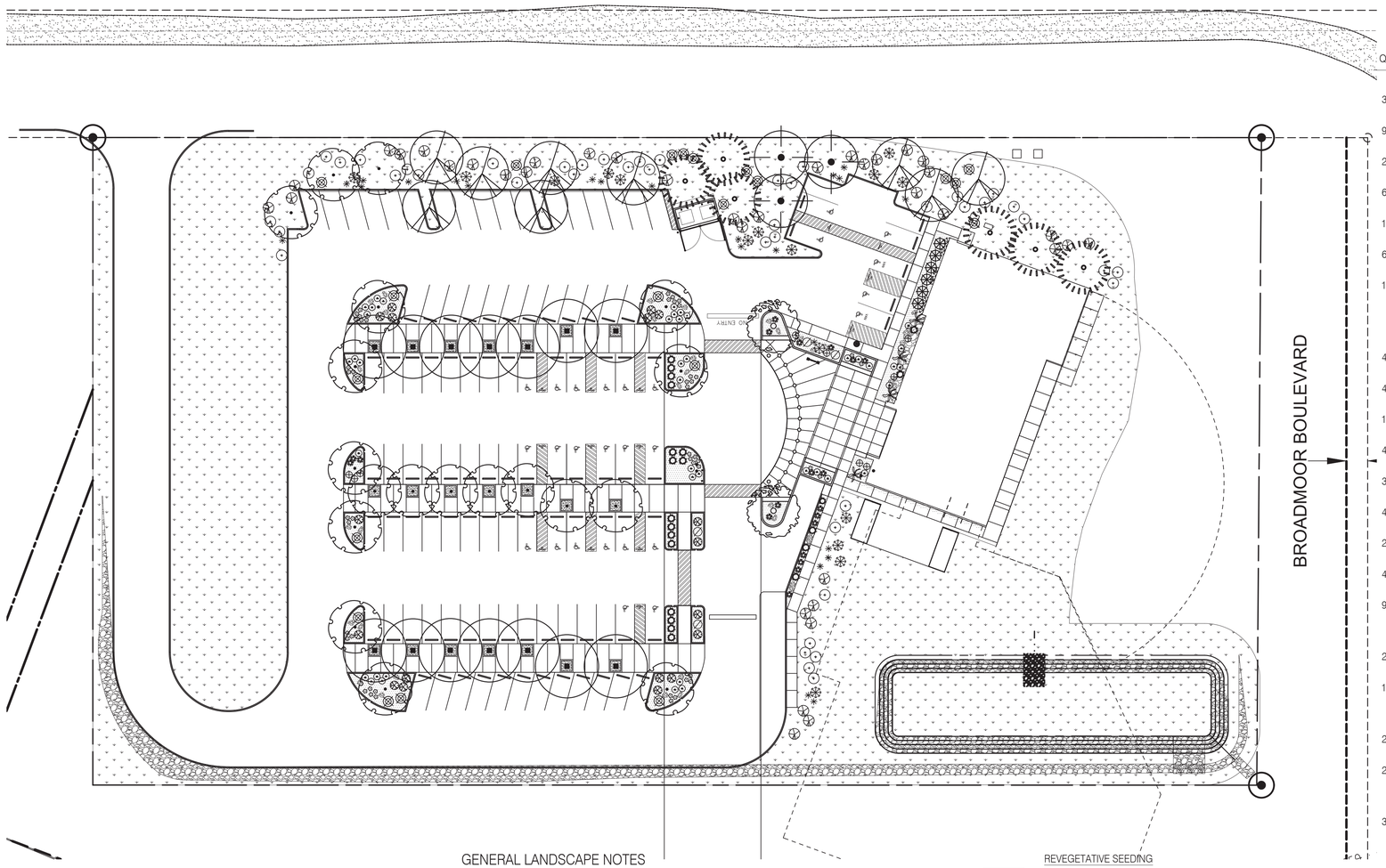

PLANT LEGEND

QTY.	SYMBOL	SCIENTIFIC NAME COMMON NAME	SIZE	INSTALLED SIZE MATURE SIZE	WATER USE
		TREES			
3		ACER NEGUNDO 'SENSATION' SENSATION BOX ELDER	2.5" B&B	30' HT. X 25' SPR.	MED
9		CELTIS RETICULATA NETLEAF HACKBERRY	2.5" B&B	30' HT. X 25' SPR.	LOW+
2		CERCIS RENIFORMIS 'OKLAHOMA' OKLAHOMA REDBUD	2.5" B&B	20' HT. X 25' SPR.	MED
6		PINUS NIGRA AUSTRIAN PINE	8' HT. B&B	35' HT. X 25' SPR.	MED+
14		PISTACHIA ATLANTICA X 'RED PUSH' RED PUSH PISTACHE	2.5" B&B	40' HT. X 40' SPR.	MED
6		THUJA OCCIDENTALIS 'SMARAGD' EMERALD GREEN ARBORVITAE	15 GAL	15' HT. X 4' SPR.	LOW+
19		ULMUS PARVIFOLIA 'EMER II' LACEBARK ELM	2.5" B&B	40' HT. X 40' SPR.	MED
		SHRUBS AND GROUNDCOVERS			
47		SEDUM TELEPHIUM AUTUMN JOY SEDUM	1-GAL	2' HT. X 2' SPR.	LOW+
4		BUDDLEIA DAVIDII 'NANHOENSIS' DWARF BUTTERFLY BUSH	5-GAL	4' HT. X 4' SPR.	MED
18		CARYOPTERIS CLAN. 'DARK KNIGHT' DARK KNIGHT SPIREA	5-GAL	4' HT. X 4' SPR.	LOW
44		ARTEMISIA FILIFOLIA SAND SAGE	5-GAL	4' HT. X 4' SPR.	RW
37		CYTISUS SCOPARIUS 'MOONLIGHT' MOONLIGHT SCOTCH BROOM	5-GAL	5' HT. X 6' SPR.	LOW+
4		JUNIPERUS HORIZ. 'BLUE CHIP' BLUE CHIP JUNIPER (FEMALES ONLY)	5-GAL	1' HT. X 7' SPR.	MED
21		RHUS AROMATICA 'GRO-LOW' PROSTRATE SUMAC	5-GAL	2' HT. X 8' SPR.	LOW+
40		SALVIA DORRII PURPLE SAGE	5-GAL	3' HT. X 3' SPR.	MED
9		SALVIA GREGGII 'FURMAN'S RED' FURMAN'S RED CHERRY SAGE	3-GAL	30" HT. X 3' SPR.	MED
		DESERT ACCENTS			
23		HESPERALOE PARVIFOLIA 'BRAKELIGHTS' BRAKELIGHTS RED YUCCA	3-GAL	3' HT. X 3' SPR.	LOW
16		DASYLIRION WHEELERI BLUE SOTOL	5-GAL	5' HT. X 5' SPR.	RW
		ORNAMENTAL GRASSES			
22		CALAMOGROSTIS A. 'KARL FOERSTER' KARL FOERSTER FEATHER REED GRASS	5-GAL	30" HT. X 3' SPR.	MED
20		MUHLENBERGIA C. 'REGAL MIST' MUHLY GRASS	5-GAL	3' HT. X 4' SPR.	MED
		VINES			
3		POLYGONUM AUBERTII SILVER LACE VINE	5-GAL	25' HT./SPR.	MED

MULCHES AND BOULDERS

- SHREDDED BARK MULCH (3" DEPTH OVER FILTER FABRIC, DEWITT PRO-5 WEED CONTROL, OR EQUAL)
- 1" MOUNTAINAIR BROWN ROCK MULCH (3" DEPTH OVER FILTER FABRIC, DEWITT PRO-5 WEED CONTROL OR EQUAL)
- 2"-4" COYOTE MIST COBBLE MULCH (6" DEPTH OVER FILTER FABRIC, DEWITT PRO-5 WEED CONTROL, OR EQUAL)
- LANDSCAPE BOULDERS - DESERT DRIFTWOOD (27 C.F. TYP. SIZE)

GENERAL LANDSCAPE NOTES

1. PRIOR TO BEGINNING WORK ON THE PROJECT, THE LANDSCAPE CONTRACTOR SHALL REVIEW THE PROJECT IN THE FIELD WITH THE OWNER'S REPRESENTATIVE.
2. IF DISCREPANCIES OCCUR BETWEEN THE DRAWINGS AND THE SITE, THE LANDSCAPE CONTRACTOR SHALL NOTIFY THE OWNER'S REPRESENTATIVE FOR CLARIFICATION PRIOR TO PROCEEDING ON THAT PORTION OF WORK.
3. ALL PLANTING AREAS ARE TO HAVE WEEDS AND COMPETITIVE VEGETATION REMOVED PRIOR TO PREPARATION FOR PLANTING.
4. ALL EXISTING PLANT MATERIALS TO REMAIN SHALL BE PROTECTED DURING CONSTRUCTION. DAMAGED MATERIALS SHALL BE REPLACED IN KIND AT THE CONTRACTOR'S EXPENSE.
5. PLANT QUANTITIES ARE PROVIDED FOR CONTRACTOR'S CONVENIENCE ONLY, PLANS SHALL TAKE PRECEDENCE.
6. THE OWNER'S REPRESENTATIVE SHALL APPROVE ALL PLANT MATERIAL PRIOR TO PLANTING. IN ADDITION, THE OWNER REPRESENTATIVE RESERVES THE RIGHT TO REFUSE ANY PLANT MATERIAL DEEMED UNACCEPTABLE. THE OWNER'S REPRESENTATIVE IS TO APPROVE ANY AND ALL SUBSTITUTIONS.
7. IT IS THE LANDSCAPE CONTRACTOR'S RESPONSIBILITY TO LOCATE ALL UNDERGROUND UTILITIES PRIOR TO COMMENCEMENT OF PLANTING OPERATIONS.

REVEGETATIVE SEEDING

AREAS SHALL BE REVEGETATED BY HYDROMULCH APPLICATION. LIMITS OF REVEGETATED SEEDING SHOWN ON PLANS IS SCHEMATIC. CONTRACTOR SHALL APPLY REVEGETATION SEEDING TO LIMITS OF DISTURBANCE.

SANDY SOILS MIX (20 LBS. PLS PER ACRE TOTAL)

SCIENTIFIC NAME - COMMON NAME	#PLS/AC
HILARIA JAMESII 'VIVA' - GALLETA	7.0
ORYZOPSIS HYMENOIDES 'NESPAR' - INDIAN RICE GRASS	5.0
BOUTELOUA GRACILIS 'HACHITA' - BLUE GRAMA	2.0
BOUTELOUA CURTIPENDULA 'VAUGHN' - SIDEOATS GRAMA	1.0
AGROPYRON SMITHII - WESTERN WHEAT	1.0
SPOROBOLUS CRYPTANDRUS - SAND DROPSEED	1.0
SPOROBOLUS AIROIDES 'SALADO' - ALKALI SACATON	1.0
EPHEDRA VIRIDIS - GREEN MORMON TEA	.25
ARTIPLEX CANESCENS - FOURWING SALTBRUSH	.25
ARTEMISIA FILIFOLIA - SAND SAGE	.5
SPHAERALCEA AMBIGUA - DESERT GLOBEMALLOW	.25
OENOTHERA PALLID - WHITE EVENING PRIMROSE	.25
BAILEYA MULTIRADIATA - DESERT MARIGOLD	.25
PENSTEMON AMBIQIES - SAND PENSTEMON	.25

SCALE: 1" = 30'

NORTH 15 0 30 60

CONSENSUS PLANNING, INC.
Planning / Landscape Architecture
302 Eighth Street NW
Albuquerque, NM 87102
(505) 764-9801 Fax 842-5495

G. DONALD DUDLEY AIA
ARCHITECT
ARCHITECTURE • INTERIORS • PLANNING
AIA • NCARB • LEED AP
SIMMS TOWER STUDIO 850
400 GOLD AVENUE SW
ALBUQUERQUE, NEW MEXICO
87102
TEL 505.243.8100

STATE OF NEW MEXICO
CHRISTOPHER J. GREEN
F234
REGISTERED LANDSCAPE ARCHITECT

NEW BUILDING FOR:
RIO RANCHO
SENIOR CENTER
CITY OF RIO RANCHO
NEW MEXICO

MARK	DATE	DESCRIPTION

GDDA PROJECT NO: 18–137
DATE: 4/1/2020
DRAWN BY: AM
CHECKED BY: CG
SET NO:
SHEET TITLE: PLANTING PLAN
100% CONSTRUCTION DOCUMENTS

L-201

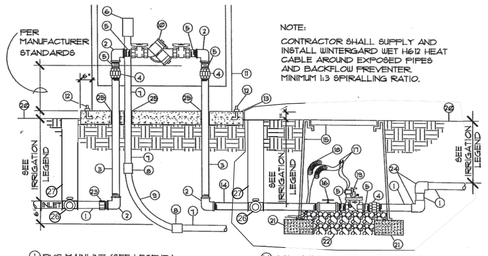

1. PVC MAINLINE (SEE LEGEND)
2. GALVANIZED ELBOW
3. GALVANIZED NIPPLE, LENGTH AS REQUIRED
4. GALVANIZED UNION
5. GALVANIZED NIPPLE - 3" LENGTH
6. JUNCTION BOX FOR HEAT TAPE
7. RIGID STEEL CONDUIT
8. WATERTIGHT CONNECTOR
9. RIGID STEEL SWEEP ELL
10. REDUCED PRESSURE BACKFLOW PREVENTER, SEE IRRIGATION LEGEND
11. INSULATED ENCLOSURE (SEE LEGEND)
12. 1/2"x6" ANCHOR BOLTS, FOUR PER BOX
13. 3000 PSI CONCRETE PAD, 6" THICK WITH TOOLED EDGES
14. GALVANIZED NIPPLE - 36" LENGTH
15. BROOKS 1730 PB-18" VALVE BOX W/ 8" EXTENSIONS AS REQUIRED
16. SPEARS TRUE UNION SCH. 80 PVC BALL VALVE
17. WATERPROOF WIRE SPLICE
18. 36" WIRE LOOPS
19. MASTER VALVE, SEE IRRIGATION LEGEND
20. FINISH GRADE
21. SOLID CMU BLOCK, FOUR PER BOX
22. PEA GRAVEL - 3 CUBIC FEET
23. SCH 40 PVC MALE ADAPTER
24. MAIN LINE ELL, 90 DEGREE
25. PVC SLEEVE
26. MANUAL DRAIN VALVE AT "T" OFF OF MAINLINE PER DETAIL 3, THIS SHEET. ALSO SEE PLAN VIEW, THIS DETAIL.
27. VALVE BOX. SEE DETAIL 3, THIS SHEET.

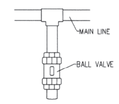

PLAN VIEW

1 BACKFLOW PREVENTER & MASTER VALVE ASSEMBLY
N.T.S.

NOTE: CONTRACTOR SHALL INSTALL ONE AUTOMATIC VALVE ASSEMBLY PER VALVE BOX.

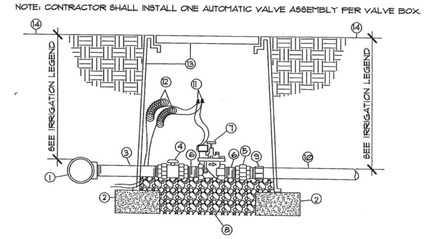

1. MAINLINE SERVICE TEE
2. SOLID CMU BLOCK, FOUR PER BOX
3. SCH. 80 PVC NIPPLE, LENGTH AS REQUIRED
4. SPEARS TRUE UNION SCH. 80 PVC BALL VALVE WITH UNIONS
5. SPEARS SCH. 80 PVC UNION
6. SCH. 80 PVC NIPPLE - 3" LENGTH
7. REMOTE CONTROL VALVE, SEE IRRIGATION LEGEND
8. CLEAN PEA GRAVEL - 3 CUBIC FEET
9. SCH. 40 PVC MALE ADAPTER
10. LATERAL PIPING (SEE LEGEND)
11. WATERPROOF WIRE CONNECTOR
12. 36" WIRE EXPANSION LOOPS
13. BROOKS PRODUCTS, INC. 1324 PB-18 BODY (ABS) VALVE BOX WITH 1324 BOLT DOWN COVER (ABS) AND W/ 8" EXTENSIONS AS REQUIRED
14. FINISH GRADE

2 REMOTE CONTROL VALVE ASSEMBLY
N.T.S.

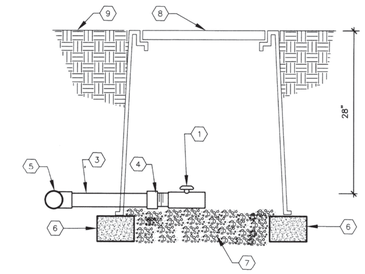

KEYED NOTES

1. SPEARS PVC BALL VALVE, OR EQUAL
2. NOT USED
3. "T" OFF OF MAINLINE
4. SCH. 40 PVC MALE ADAPTER
5. MAINLINE PIPE (SEE LEGEND)
6. CMU BLOCK
7. PEA GRAVEL – 3 CUBIC FEET
8. APPLIED ENGINEERING PRODUCTS 1015-1G2G VALVE BOX W/ 6" EXTENSIONS (1015-XG) AS REQUIRED
9. FINISH GRADE

3 MANUAL DRAIN VALVE
N.T.S.

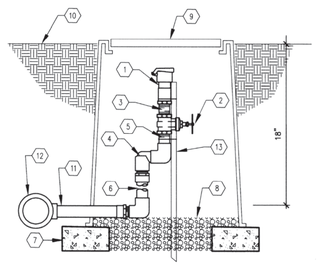

KEYED NOTES

1. QUICK COUPLER VALVE (SEE LEGEND)
2. SPEARS SCH. 80 PVC BALL VALVE
3. SCH. 80 PVC NIPPLE – 2" LENGTH
4. SPEARS 591-010 SWING JOINT
5. SCH. 80 PVC EXTRUDED TOE NIPPLE – 6" LENGTH
6. SCH. 80 PVC PIPE – 18" LENGTH
7. CMU BLOCK – 2 PER VALVE BOX
8. PEA GRAVEL – 4 CUBIC FEET
9. APPLIED ENGINEERING PRODUCTS 1730-18P2P VALVE BOX WITH ONE 8" EXTENSION AND FLUSH COVER
10. FINISH GRADE
11. SCH. 40 PVC PIPE (LENGTH AS REQUIRED)
12. MAINLINE FITTING
13. #4 REBAR WITH 2 METAL STRAPS

4 QUICK COUPLER ASSEMBLY
N.T.S.

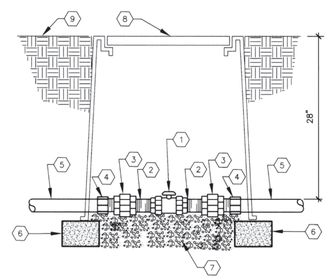

KEYED NOTES

1. SPEARS TRUE UNION PVC BALL VALVE, OR EQUAL
2. SCH. 80 PVC THREADED NIPPLE – 3" LENGTH
3. SPEARS SCH. 80 PVC THREADED UNION
4. SCH. 40 PVC MALE ADAPTER
5. MAINLINE PIPE (SEE LEGEND)
6. CMU BLOCK
7. PEA GRAVEL – 3 CUBIC FEET
8. APPLIED ENGINEERING PRODUCTS 1730-18P2P VALVE BOX W/ 8" EXTENSIONS AS REQUIRED
9. FINISH GRADE

5 ISOLATION VALVE
N.T.S.

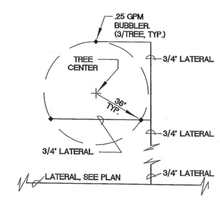

6 TRIPLE BUBBLER LAYOUT
N.T.S.

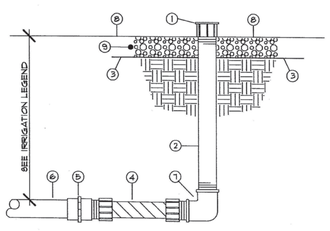

1. BUBBLER, SEE IRRIGATION LEGEND
2. 1/2" SCH. 80 PVC THREADED NIPPLE, LENGTH AS REQUIRED
3. WEED CONTROL FABRIC, SEE PLANTING PLANS
4. 1/2" X 6" PVC FLEX NIPPLE
5. 3/4" X 1/2" SCH. 40 PVC FEMALE ADAPTER
6. LATERAL PIPING, SEE IRRIGATION LEGEND
7. 1/2" SCH 40 PVC THREADED ELBOW
8. TOP OF MULCH, SEE PLANTING PLAN
9. MULCH LAYER, SEE PLANTING PLAN

7 BUBBLER ASSEMBLY
N.T.S.

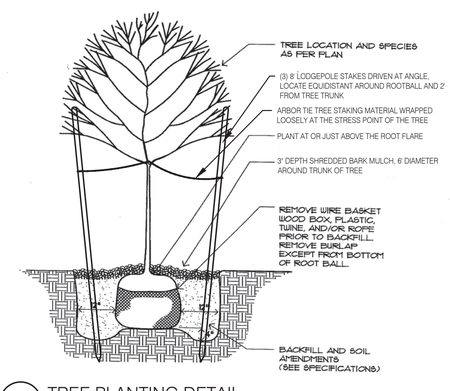

8 TREE PLANTING DETAIL
N.T.S.

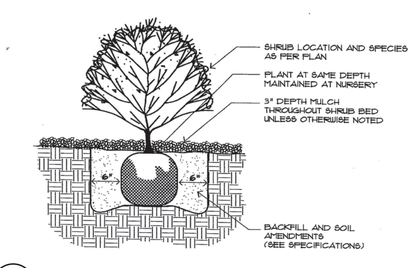

9 SHRUB PLANTING DETAIL
N.T.S.

CONSENSUS PLANNING, INC.
Planning / Landscape Architecture
302 Eighth Street NW
Albuquerque, NM 87102
(505) 764-9801 Fax 842-5495

G. DONALD DUDLEY AIA
ARCHITECT
ARCHITECTURE • INTERIORS • PLANNING
AIA • NCARB • LEED AP
SIMMS TOWER STUDIO 850
400 GOLD AVENUE SW
ALBUQUERQUE, NEW MEXICO
87102
TEL 505.243.8100

STATE OF NEW MEXICO
CHRISTOPHER J. GREEN
#234
REGISTERED LANDSCAPE ARCHITECT

NEW BUILDING FOR:
RIO RANCHO SENIOR CENTER
CITY OF RIO RANCHO NEW MEXICO

MARK	DATE	DESCRIPTION

GDDA PROJECT NO: 18-137
DATE: 4/1/2020
DRAWN BY: AM
CHECKED BY: CG
SET NO:
SHEET TITLE: LANDSCAPE DETAILS
100% CONSTRUCTION DOCUMENTS

L-501

GENERAL STRUCTURAL NOTES:

1. CODES AND MANUALS
   - 2015 EDITION OF THE INTERNATIONAL BUILDING CODE
   - MINIMUM DESIGN LOADS FOR BUILDINGS AND OTHER STRUCTURES (ASCE/SEI 7–10)
   - AISC MANUAL OF STEEL CONSTRUCTION (15TH EDITION)
   - STEEL JOIST INSTITUTE STANDARD SPECIFICATIONS, LOAD TABLES AND WEIGHT TABLES FOR OPEN WEB STEEL JOISTS AND JOIST GIRDERS (CURRENT EDITION)
   - STEEL DECK INSTITUTE DIAPHRAGM DESIGN MANUAL (SDI EDITION)
   - AMERICAN IRON & STEEL INSTITUTE COLD FORMED STEEL MANUAL (CURRENT EDITION)
   - AMERICAN CONCRETE INSTITUTE BUILDING CODE REQUIREMENTS FOR REINFORCED CONCRETE (ACI 318–14)
   - AMERICAN WELDING SOCIETY D1.1 AND D1.3

2. DESIGN PARAMETERS
   - A. VERTICAL:
     - LIVE LOAD:
       - ROOF — 20 PSF (SNOW)
     - DEAD LOAD:
       - ROOF — 20 PSF
       - Is (IMPORTANCE FACTOR FOR SNOW) — 1.0
   - B. HORIZONTAL LOADS:
     - (1) WIND — 21.5 PSF
     - IMPORTANCE FACTOR FOR WIND — Iw = 1.0
     - (2) SEISMIC — V = Sds IE W/ R
       - SPECTRAL ACCELERATIONS — Ss= 0.487; S1= 0.146
       - SOIL SITE CLASS — D
       - SEISMIC DESIGN CATEGORY — D
       - IMPORTANCE FACTOR SEISMIC — IE = 1.0
       - DESIGN SPECTRAL RESPONSE — Sds = 0.448
       - ONE SECOND PERIOD RESPONSE ACCEL. — Sd1 = 0.216
       - RESPONSE MODIFICATIONS COEFFICIENT — R = 4.0
       - SEISMIC FORCE — V = 0.080 X W
   - C. ALLOWABLE SOIL BEARING PRESSURE = 2000PSF (SEE GEO–TECHNICAL REPORT FOR REQUIREMENTS TO ACHIEVE THAT PRESSURE)

3. GENERAL
   - A. THE CONTRACTOR SHALL VERIFY ALL DIMENSIONS IN THE FIELD, BRING ANY DISCREPANCIES TO THIS DESIGN TEAM.
   - B. SHOP DRAWINGS FOR STRUCTURAL ITEMS SHALL BE FURNISHED AND REVIEWED BEFORE ANY FABRICATION OR ERECTION IS STARTED.
   - C. THE CONTRACTOR SHALL REVIEW AND APPROVE SHOP DRAWINGS PRIOR TO SUBMITTAL TO THE ARCHITECT FOR REVIEW. INCOMPLETE SHOP DRAWINGS WILL BE REJECTED AND REQUIRE RESUBMITTAL.
   - D. THE CONTRACTOR SHALL BE RESPONSIBLE FOR PROVIDING SAFE AND ADEQUATE SHORING FOR ALL PARTS OF THE STRUCTURE DURING CONSTRUCTION.
   - E. TEMPORARY PROVISIONS SHALL BE MADE FOR STRUCTURAL STABILITY DURING CONSTRUCTION. THE STRUCTURE SHOWN ON THE DRAWINGS HAS BEEN DESIGNED FOR STABILITY UNDER FINAL CONFIGURATION.
   - F. THE CONTRACTOR SHALL COORDINATE AND VERIFY ALL OPENINGS IN FLOORS, ROOFS, WALLS AND BEAMS WITH THE INDIVIDUAL TRADES.
   - G. NOTCHING OR CUTTING ANY STRUCTURAL MEMBER IN THE FIELD IS PROHIBITED.
   - H. THE CONTRACTOR SHALL VERIFY THE SIZE AND LOCATION OF FOUNDATIONS UNDER MECHANICAL AND ELECTRICAL EQUIPMENT AS REQUIRED. NO CONCRETE PADS SHALL BE LOCATED ON ROOF UNLESS SHOWN ON STRUCTURAL DRAWINGS.
   - I. REMOVAL OF FORMS SHALL BE IN ACCORDANCE WITH ACI 347. WHERE CONCRETE MUST SUPPORT SUPERIMPOSED LOADS PRIOR TO ATTAINING THE SPECIFIED DESIGN STRENGTH, RESHORE CONCRETE IN ACCORDANCE WITH ACI 347. RESHORING SHALL NOT BE REMOVED SOONER THAN 28 DAYS FROM THE DATE OF POUR OR UNTIL CONCRETE HAS ATTAINED THE SPECIFIED DESIGN STRENGTH.

4. MATERIALS
   - A. CAST–IN–PLACE CONCRETE:
     - (1) ALL CONCRETE SHALL CONFORM TO THE SPECIFICATIONS FOR STRUCTURAL CONCRETE, ACI 301–96
     - (2) NORMAL WEIGHT CONCRETE:
       - A. F'C = 4000 PSI = 28 DAYS – ALL INTERIOR SLABS ON GRADE.
       - B. F'C = 3000 PSI = 28 DAYS – ALL INTERIOR CONCRETE (AIR ENTRAINED) IE., FOOTINGS, PEDESTALS, STEM WALLS, ETC.)
       - C.F'C = 4000 PSI = 28 DAYS (AIR ENTRAINED) – ALL EXPOSED EXTERIOR CONCRETE FLAT WORK (I.E. SLABS, EQUIPMENT PADS. ETC.).
   - B. REINFORCED STEEL:
     - (1) ALL REINFORCING STEEL SHALL BE FABRICATED AND PLACED IN ACCORDANCE WITH THE BUILDING CODE REQUIREMENTS FOR REINFORCED CONCRETE (ACI 318) AND THE STANDARD MANUAL (ACI 315–99), DETAILS & DETAILING OF CONCRETE REINFORCEMENT.
     - (2) ALL REINFORCING STEEL #5 BARS & SMALLER SHALL CONFORM TO ASTM A615 GRADE 40. ALL REINFORCING STEEL #6 & LARGER BARS SHALL CONFORM TO ASTM A615 GRADE 60.
       ALL STIRRUPS, TIES AND FIELD–BENT BARS SHALL CONFORM TO ASTM A615 GRADE 40.
     - (3) ALL SLABS SHALL BE REINFORCED AS SHOWN ON THE DRAWINGS WITH REINFORCING CENTERED IN SLAB UNLESS NOTED OTHERWISE.
     - (4) WHERE LAPPED SPLICES IN REINFORCING OCCUR, THE MINIMUM LAP SHALL BE 30 BAR DIAMETERS (18" MIN.).
     - (5) ALL HORIZONTAL REINFORCING IN FOOTINGS, BEAMS, AND WALLS SHALL BE CONTINUOUS AROUND CORNERS OR HAVE CORNER BARS OF THE SAME SIZE AND SPACING AS THE HORIZONTAL BARS AND LAP A MINIMUM OF 30 BAR DIAMETERS. (18 IN MINIMUM).
     - (6) CONCRETE COVER FOR REINFORCING SHALL BE AS FOLLOWS UNLESS OTHERWISE NOTED:
       - A. CONCRETE CAST AGAINST AND PERMANENTLY EXPOSED TO EARTH.....3"
       - B. CONCRETE EXPOSED TO EARTH OR WEATHER:
         - 1. BARS LARGER THAN NO. 5.....2"
         - 2. BARS NO. 5 OR SMALLER .....1½"
     - (7) FORM TIES SHALL BE EITHER OF THE THREADED OR SNAP–OFF TYPE SO THAT NO METAL WILL BE LEFT WITHIN 1 INCH OF THE SURFACE OF THE WALL.
     - (8) BAR SUPPORTS AND SPACERS FOR REINFORCING WALLS TO BE PROVIDED IN ACCORDANCE WITH ACI 315–99. CHAIRS WITH 22 GA. SAND PLATES OR PRECAST BLOCKS SHALL BE PROVIDING FOR ALL REINFORCING OF CONCRETE IN CONTACT WITH GRADE. REINFORCING SHALL BE SECURELY TIED TO SUPPORTS.
     - (9) REINFORCING SHALL NOT BE WELDED IN ANY MANNER UNLESS SPECIFICALLY DETAILED ON THE STRUCTURAL PLANS.
   - C. STRUCTURAL STEEL.
     - (1) ALL STRUCTURAL STEEL SHALL BE DETAILED AND FABRICATED IN ACCORDANCE WITH THE AISC "SPECIFICATION FOR THE DESIGN, FABRICATION AND ERECTION OF THE STRUCTURAL STEEL FOR BUILDINGS"
     - (2) ALL W–SHAPED MEMBERS SHALL CONFORM TO ASTM A992 (Fy=50KSI) ALL CHANNELS, ANGLES, & PLATES SHALL BE ASTM A36 (Fy=36KSI)
     - (3) ALL COLD FORMED STRUCTURAL TUBING SHALL CONFORM TO ASTM A500 GRADE B. FY = 46 KSI
     - (4) BOLTS SHALL CONFORM TO ASTM A325 TENSION CONTROL BOLTS UNLESS NOTED OTHERWISE, WITH SIZES AS SHOWN ON THE DRAWINGS. WHERE CLEARANCE WITHIN A CONNECTION DOES NOT PERMIT THE USE OF TENSION CONTROL BOLTS, STANDARD A325 BOLTS SHALL BE USED AND INSPECTED IN ACCORDANCE WITH THE AISC "SPECIFICATIONS FOR STRUCTURAL JOINTS USING ASTM A325 OR A490 BOLTS"
     - (5) ALL BOLTS SHALL BE TIGHTENED SO AS TO SHEAR THE SPLINE OFF THE BOLT.
     - (6) ANCHOR BOLTS EMBEDDED IN CONCRETE SHALL BE ASTM A307 BOLTS OR A36 THREADED BARS. PROVIDE FLAT WASHERS BETWEEN ALL NUTS AND BASEPLATES.
     - (7) ALL WELDING SHALL BE DONE IN ACCORDANCE WITH THE LATEST STANDARDS OF THE AWS STRUCTURAL WELDING CODE.
     - (8) ALL BOLT HOLES THAT ARE REQUIRED TO BE FIELD DRILLED SHALL BE DRILLED WITH A MAG DRILL. FLAME CUTTING OF HOLES OR ENLARGING OF MISALIGNED HOLES IS NOT ALLOWED.
     - (9) HEADED CONCRETE ANCHORS AND SHEAR CONNECTORS SHALL BE TYPE B. IN CONFORMANCE WITH AWS DI.1 "STRUCTURAL WELDING CODE–STEEL". STRUCTURAL STEEL TO RECEIVE SHEAR CONNECTIONS SHALL BE FREE OF PAINT.
   - D. STEEL JOISTS:
     - (1) STEEL JOISTS SHALL BE MANUFACTURED BY A MEMBER OF SJI.
     - (2) STEEL JOISTS SHALL BE DESIGNED, FABRICATED AND ERECTED IN ACCORDANCE WITH THE 2002 STEEL JOIST INSTITUTE SPECIFICATIONS.
     - (3) NO CONSTRUCTION LOADS OF ANY KIND SHALL BE PLACED ON UNBRIDGED JOISTS.
     - (4) WHERE COLUMNS ARE NOT FRAMED IN AT LEAST TWO DIRECTIONS WITH STRUCTURAL STEEL MEMBERS, JOISTS AT OR CLOSEST TO COLUMN LINES SHALL BE FIELD BOLTED TO ADD LATERAL STABILITY DURING CONSTRUCTION.
     - (5) JOIST MANUFACTURER TO PROVIDE & CONTRACTOR TO INSTALL BRIDGING IN ACCORDANCE WITH THE CURRENT EDITION OF SJI STANDARD SPECIFICATIONS.
   - E. STEEL DECK:
     - (1) ALL STEEL DECK SHALL BE FABRICATED AND ERECTED IN ACCORDANCE WITH STEEL DECK INSTITUTE SPECIFICATIONS.
     - (2) SEE PLAN FOR STEEL DECK GAGE, FINISH AND CONNECTIONS.
     - (3) PROVIDE A MINIMUM OF 1½" BEARING FOR ALL STEEL DECKS.
     - (4) ALL SPLICES AND LAPS SHALL BE A MINIMUM OF 2" AND SHALL BE LOCATED ONLY AT SUPPORTS.
     - (5) DECKING SHALL BE CONTINUOUS OVER A MINIMUM OF 2 SPANS UNLESS NOTED OTHERWISE ON THE PLANS.
     - (6) POWER DRIVEN FASTENERS SHALL HAVE A MIN. 0.177 INCH SHAFT DIAMETER AND BE EQUIVALENT TO HILTI X–ENP–19 DECK FASTENERS.
   - F. LIGHTGAGE STRUCTURAL STEEL FRAMING (20 GAGE OR HEAVIER):
     - (1) ALL LIGHTGAGE METAL FRAMING SHALL CONFORM TO AISI "SPECIFICATIONS FOR THE DESIGN OF COLD–FORMED STEEL STRUCTURAL MEMBERS", CURRENT EDITION
     - (2) WALLS TO BE PROVIDED WITH MANUFACTURER'S STANDARD BRIDGING: (EITHER WELDED 2½" X 18 GA, STUD OR CLIPPED COLD–ROLLED CHANNEL 1½" X 16 GA.). PROVIDED BRIDGING AT 4'–0" O.C. MAXIMUM.
     - (3) PROVIDE ALL MISCELLANEOUS ACCESSORIES AND FOLLOW ERECTION PROCEDURES AS PER MANUFACTURER'S SPECIFICATIONS AND RECOMMENDATIONS.
     - (4) LIGHTGAGE STEEL FRAMING SHALL MEET THE MINIMUM PROPERTIES AS SHOWN IN THE LIGHTGAGE SCHEDULE.
     - (5) ALL TRACK SHALL BE DEEP LEG, 18 GA. MINIMUM. TRACK SHALL BE ANCHORED TO SLAB WITH ½" DIA. X 3½" EMBED EXPANSION ANCHORS OR EPOXY ANCHORS AT 4'–0" O.C. UNLESS SHOWN OTHERWISE ON PLANS.
       - G. APA SPAN RATED SHEATHING:
     - (1) PLYWOOD OR OSB ROOF AND WALL SHEATHING SHALL BE GRADE STRUCTURAL 2 AND MANUFACTURED WITH EXTERIOR GLUE.
     - (2) SEE PLAN FOR ATTACHMENT PATTERN AND THICKNESS OF SHEATHING.
     - (3) STAGGER JOINTS OF SHEATHING @ ROOF DECK, USE MID–POINT CLIPS AT UNSUPPORTED EDGES.

5. WEDGE TYPE EXPANSION ANCHORS & EPOXY ANCHORS
   - (1) BOLTS TO BE SIMPSON, HILTI, OR POWERS & INSTALLED PER MANUFACTURES RECOMMENDATIONS.

6. PER IBC CHAPTER 17, SPECIAL INSPECTION IS REQUIRED FOR THE FOLLOWING ITEMS:
   - A. CONCRETE
     - (1) DURING THE TAKING OF TEST SPECIMENS
     - (2) DURING THE PLACEMENT OF ALL REINFORCED CONCRETE
   - B. BOLTS IN CONCRETE:
     - (1) DURING THE PLACEMENT OF CONCRETE AROUND BOLTS.
   - C. REINFORCING STEEL (PERIODIC):
     - (1) DURING THE PLACEMENT OF REINFORCING STEEL FOR ALL CONCRETE REQUIRED TO HAVE SPECIAL INSPECTION NOTED ABOVE.
   - D. WELDING:
     - (1) VISUAL INSPECTION OF ALL FIELD WELDS.
     - (2) NON DESTRUCTIVE TESTING OF ALL COMPLETE PENETRATION WELDS.
   - E. HIGH STRENGTH BOLTING:
     - (1) VERIFICATIONS OF SNUG TIGHT BOLT INSTALLATION FOR A325N BOLTS.
     - (2) VERIFICATIONS OF SLIP CRITICAL (SC) BOLTS AT ALL BRACED FRAMES.
   - F. EXPANSION AND EPOXY BOLTS:
     - (1) DURING THE PLACEMENT OF ALL EXPANSION AND EPOXY BOLTS, FOR VISUAL VERIFICATION OF HOLE DIAMETER, DEPTH, AND PLACEMENT OF BOLT AND/OR EPOXY.
   - G. DUTIES AND RESPONSIBILITIES OF THE SPECIAL INSPECTOR:
     - (1) THE SPECIAL INSPECTOR SHALL OBSERVE THE WORK ASSIGNED TO BE CERTAIN IT CONFORMS WITH THE APPROVED DESIGN DRAWINGS AND SPECIFICATIONS.
     - (2) THE SPECIAL INSPECTOR SHALL FURNISH INSPECTION REPORTS TO THE BUILDING OFFICIAL, TO THE ARCHITECT, AND TO THE ENGINEER OF RECORD.
   - H. SPECIAL INSPECTOR IS TO BE HIRED BY THE OWNER & NOT BY THE CONTRACTOR.

7. FOUNDATIONS:
   - A. ALL SOIL PREPARATION TO BE PER GEO–TECHNICAL REPORT. ALL RECOMMENDATIONS IN GEO–TECHNICAL REPORT TO BE FOLLOWED. REFERENCE REPORT BY GEO–TEST DATED APRIL 11, 2019; #1–90208

RANDALL
Structural Engineering
Jeremy Randall P.E., S. E.
505-463-0258
JEREMYRSE@OUTLOOK.COM

G. DONALD DUDLEY AIA
ARCHITECT
ARCHITECTURE • INTERIORS • PLANNING
AIA • NCARB • LEED AP
SIMMS TOWER STUDIO 850
400 GOLD AVENUE SW
ALBUQUERQUE, NEW MEXICO
87102
TEL 505.243.8100

NEW BUILDING FOR:
RIO RANCHO SENIOR CENTER
CITY OF RIO RANCHO NEW MEXICO

MARK	DATE	DESCRIPTION

GDDA PROJECT NO: 18–137
DATE: 3/24/2020
DRAWN BY: DCaron
CHECKED BY: JR
SET NO:
SHEET TITLE: GENERAL STRUCTURAL NOTES

S-001

BASE BID NOTE:
IF ADD. ALT. 1 IS NOT BUILT, AIR-ENTRAINED CONCRETE SLAB AND MULTIPURPOSE ROOM FOUNDATIONS TO BE BUILT FOR BASE BID. SEE A101 FOR SLOPES AND ELEVATIONS.
FOLLOW STRUCTURAL FOR FOUNDATIONS.

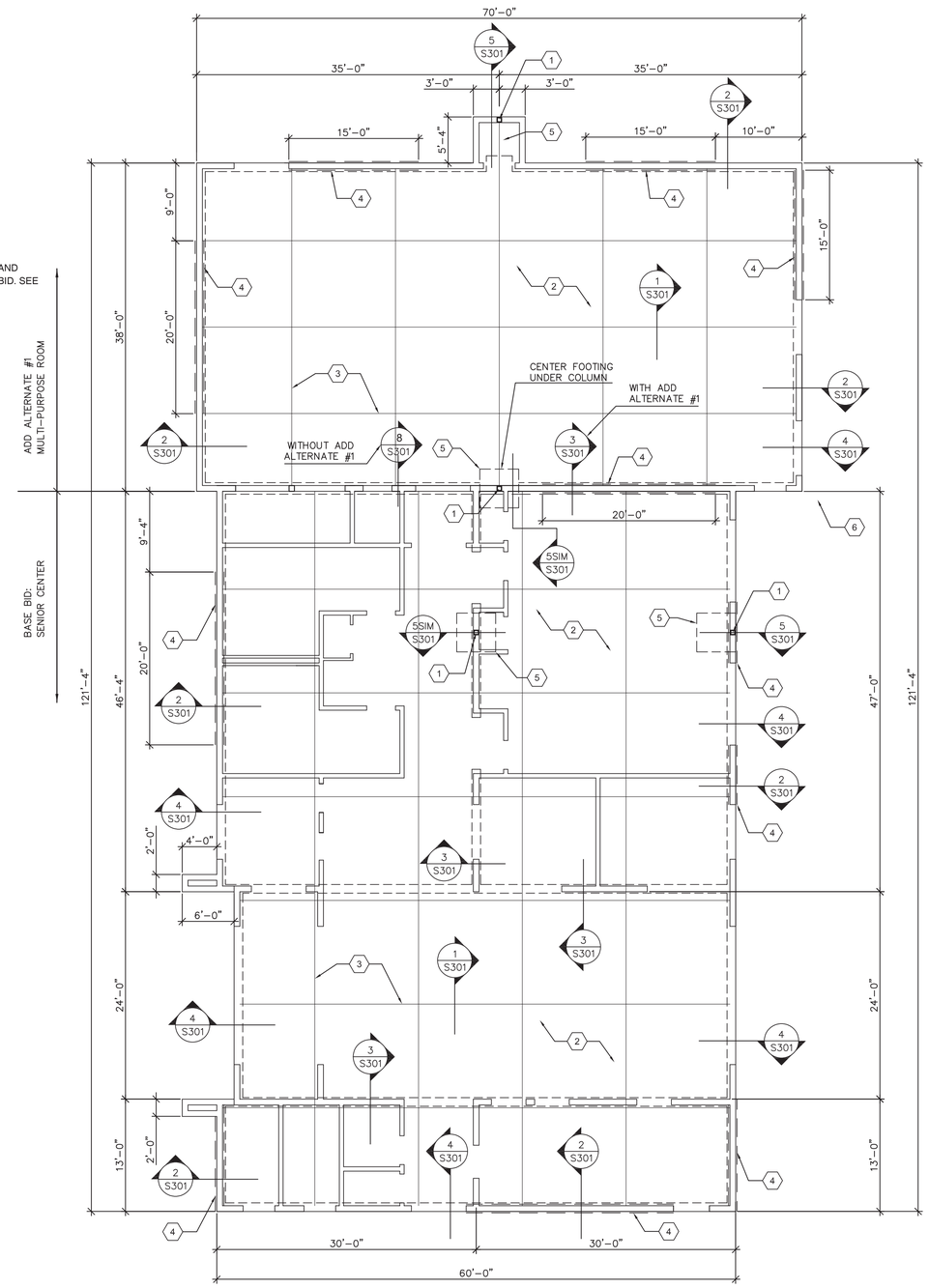

1 FOUNDATION PLAN
1/8"=1'-0"

GENERAL SHEET NOTES

A. VERIFY ALL DIMENSIONS WITH THE ARCHITECTURAL DRAWINGS
B. ALL SOIL PREPARATION TO BE PERFORMED IN ACCORDANCE W/ GEO TECHNICAL REPORT BY GEO-TEST DATED APRIL 11, 2019; JOB# 1-90208.
C. ATTACH EACH STUD TO TRACK W/ (2) #10 TEK SCREWS TYPICAL.

SHEET KEYNOTES

1. TS5x5x¼" STEEL COLUMN.
2. 4" THICK CONCRETE SLAB WITH 6x6xW2.9xW2.9 WELDED WIRE FABRIC. CHAIR WELDED WIRE FABRIC TO INSURE PLACEMENT IS AT MIDDLE OF SLAB. SLAB ELEVATION IS 100'-0".
3. CONCRETE CONTROL JOINT PER DETAIL 1/S301.
4. 6" WIDE X 14 GAGE FLAT STRAP BRACING ON BOTH SIDES OF WALL. SEE ELEVATION 7/S401. BRACING IS TO BE LOCATED AT EDGE OF MULTIPLE JAMB STUDS PER DETAILS 6/S301.
5. 4'-6" x 4'-6" SPOT FOOTING W/ (5) #5 REBAR BOTH WAYS. B/F ELEVATION = 97'-6"

RANDALL
Structural Engineering
Jeremy Randall P.E., S. E.
505-463-0258
JEREMYRSE@OUTLOOK.COM

SIMMS TOWER STUDIO 850
400 GOLD AVENUE SW
ALBUQUERQUE, NEW MEXICO
87102
TEL 505.243.8100

G. DONALD DUDLEY AIA
ARCHITECT
ARCHITECTURE • INTERIORS • PLANNING
AIA • NCARB • LEED AP

NEW BUILDING FOR:
RIO RANCHO
SENIOR CENTER
CITY OF RIO RANCHO
NEW MEXICO

MARK	DATE	DESCRIPTION

GDDA PROJECT NO: 18-137
DATE: 3/24/2020
DRAWN BY: DCaron
CHECKED BY: JR
SET NO:
SHEET TITLE: FOUNDATION PLAN

S-101

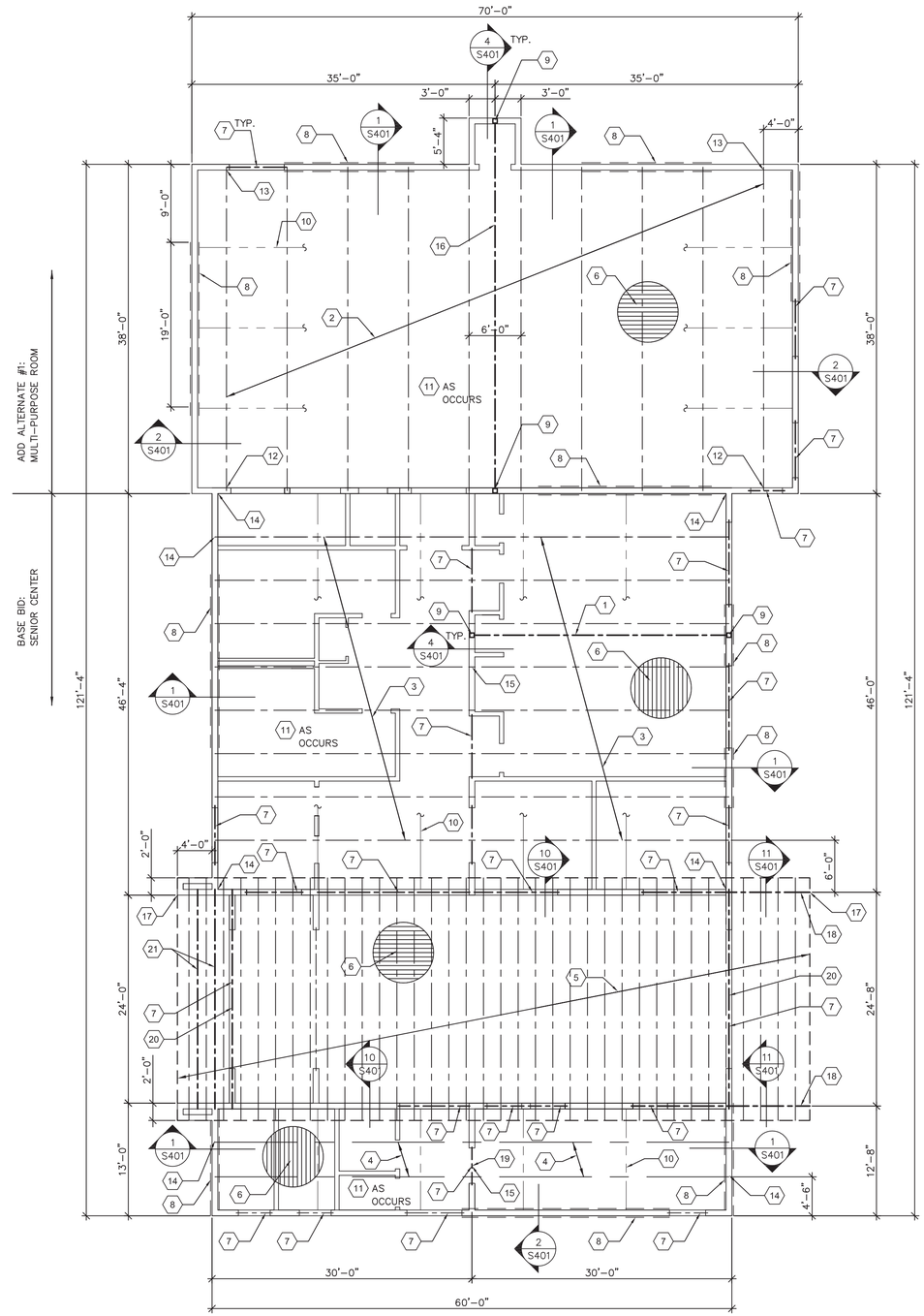

1 FRAMING PLAN
1/8"=1'-0"

GENERAL SHEET NOTES

A. C8 X 18 GAGE METAL STUDS REQUIRED TO BE 1 $\frac{5}{8}$" WIDE WITH: I=4.633 in^4, S=1.153 in^3.
B. C8 X 16 GAGE METAL LINTELS REQUIRED TO BE 1 $\frac{5}{8}$" WIDE WITH: I=5.736 in^4, S=1.434 in^3.
C. VERIFY ALL CONDITIONS IN THE FIELD.
D. VERIFY ALL DIMENSIONS WITH THE ARCHITECTURAL DRAWINGS.
E. VERIFY ALL ELEVATIONS W/ARCHITECTURAL DRAWINGS.

SHEET KEYNOTES

1. W14x43 STEEL BEAM, BOTTOM OF BEAM ELEVATION = 111'-0".
2. 26K9 OPEN-WEB STEEL JOISTS AT 7"-0" ON CENTER.
3. 22K6 OPEN-WEB STEEL JOISTS AT 5"-0" ON CENTER.
4. 22K6 OPEN-WEB STEEL JOISTS AT 4"-0" ON CENTER.
5. C12"x 2" 12GA METAL JOISTS @ 24" O.C.
6. 1 $\frac{1}{2}$" X 20 GAGE METAL "B" TYPE DECK. ATTACH DECK TO EACH SUPPORT PERPENDICULAR TO SPAN WITH (5) $\frac{1}{2}$" DIAMETER PUDDLE WELDS. ATTACH EDGE OF DECK TO EACH SUPPORT PARALLEL TO SPAN WITH $\frac{3}{8}$" DIAMETER WELDS AT 12" ON CENTER. ATTACH DECK SIDE SEAMS WITH #10 TEK SCREWS AT 12" ON CENTER.
7. LINTELS PER ELEVATION 5/S401 AND SCHEDULE/DETAIL 6/S401. TYPICAL AT ALL OPENINGS.
8. 6" WIDE X 14 GAGE FLAT STRAP BRACING ON BOTH SIDES OF WALL. SEE ELEVATION 7/S401. BRACING IS TO BE LOCATED AT EDGE OF MULTIPLE JAMB STUDS PER DETAILS 6/S301.
9. TS5x5x$\frac{1}{4}$" STEEL COLUMN.
10. BRIDGING TO BE DESIGNED AND INSTALLED PER JOIST MANUFACTURER RECOMMENDATIONS. DESIGN BRIDGING FOR 8 PSF NET UPLIFT WIND LOAD.
11. FRAME AROUND MECHANICAL UNIT OPENINGS PER DETAIL 12/S401. SEE MECHANICAL DRAWINGS FOR EXACT SIZES AND LOCATIONS OF UNITS AND OPENINGS.
12. JOISTS BEARING ELEVATION = 118'-0"
13. JOISTS BEARING ELEVATION = 117'-0"
14. JOISTS BEARING ELEVATION = 114'-0"
15. JOISTS BEARING ELEVATION = 113'-4"
16. W16x57 STEEL BEAM, BOTTOM OF BEAM ELEVATION = 114'-8"
17. JOIST BEARING ELEVATION = VARIES SEE ARCHITECTURAL
18. TS12x8x$\frac{3}{8}$" CANTILEVERED BEAM (BEAR OVER (5) C6x18 GA STUDS @ END & MIDDLE.)
19. AT WALLS W/ JOISTS BEARING ON BOTH SIDES-STAGGER JOISTS, USE SAME ANGLE AS DETAIL 3/S401 & USE 3 STUDS VS 2 STUDS IN DETAIL 3/S401.
20. TS8x8x$\frac{1}{4}$" @ TOP & BOTTOM OF HIGH CURTAIN WALL. SPAN 24' WIDE OPENING & BEAR OVER (4) C8x18GA STUDS @ EACH END.
21. TS8x8x$\frac{1}{4}$" HIGH FOR SHADE SAIL CONNECTION & 6"ø STD STEEL PIPE LOW FOR SHADE SAIL CONNECTION. BEAR HIGH TUBE STEEL OVER (3) C8x18GA STUDS & WELD PIPES TO FACE OF (3) C8x18GA STUDS.

RANDALL
Structural Engineering
Jeremy Randall P.E., S. E.
505-463-0258
JEREMYRSE@OUTLOOK.COM

SIMMS TOWER STUDIO 850
400 GOLD AVENUE SW
ALBUQUERQUE, NEW MEXICO
87102
TEL 505.243.8100
G. DONALD DUDLEY AIA
ARCHITECT
ARCHITECTURE • INTERIORS • PLANNING
AIA • NCARB • LEED AP

NEW BUILDING FOR:
RIO RANCHO
SENIOR CENTER
CITY OF RIO RANCHO
NEW MEXICO

MARK	DATE	DESCRIPTION

GDDA PROJECT NO: 18-137
DATE: 3/24/2020
DRAWN BY: DCaron
CHECKED BY: JR
SET NO:
SHEET TITLE: FRAMING PLAN

S-201

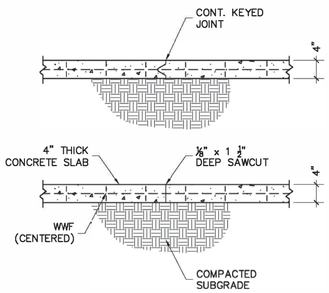

1 S301 TYP. CONTROL JOINT (C.J)
3/4" = 1'-0"

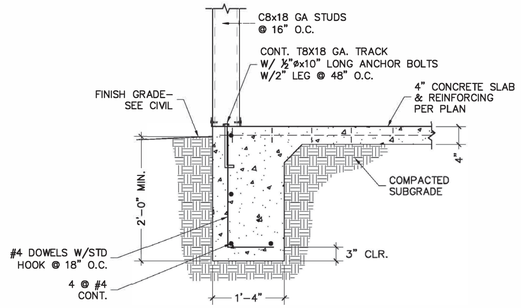

2 S301 EXTERIOR TURN–DOWN FOOTING
3/4" = 1'-0"

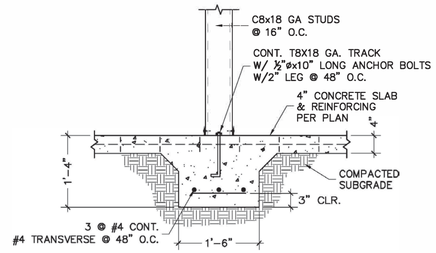

3 S301 INTERIOR TURN–DOWN FOOTING
3/4" = 1'-0"

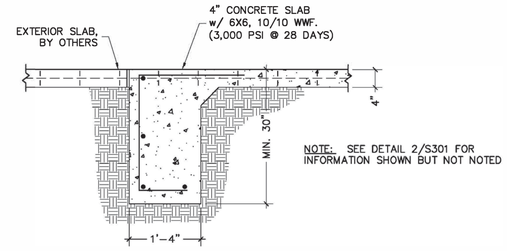

4 S301 DOOR OPENING TURN–DOWN FOOTING
3/4" = 1'-0"

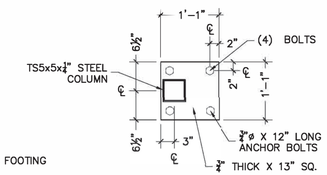

STEEL BASE PLATE

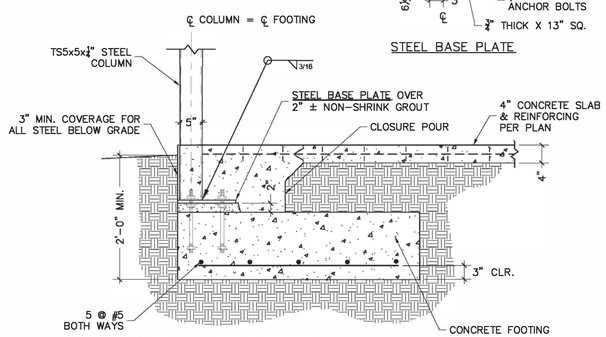

5 S301 STEEL COLUMN FOOTING
3/4" = 1'-0"

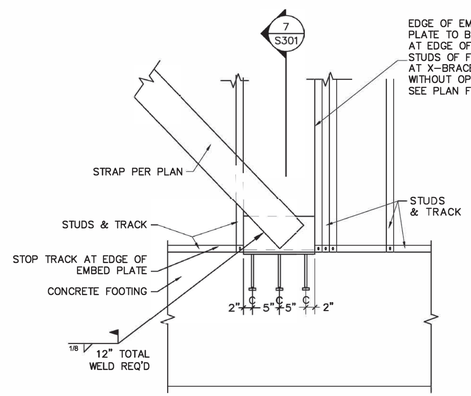

6 S301 X–BRACING STRAP CONNECTION
3/4" = 1'-0"

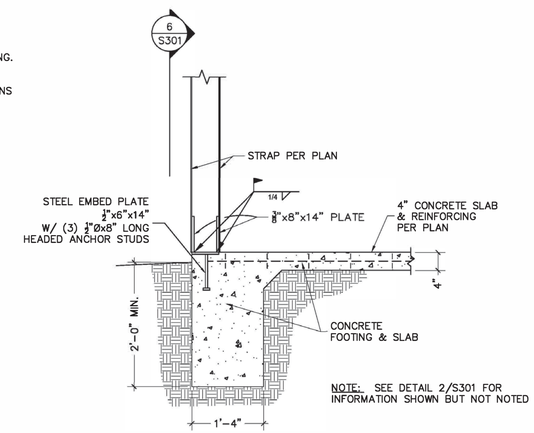

7 S301 X–BRACING STRAP CONNECTION
3/4" = 1'-0"

BASE BID NOTE:
IF ADD. ALT. 1 IS NOT BUILT, AIR-ENTRAINED CONCRETE SLAB AND MULTIPURPOSE ROOM FOUNDATIONS TO BE BUILT FOR BASE BID. SEE A101 FOR SLOPES AND ELEVATIONS.
FOLLOW STRUCTURAL FOR FOUNDATIONS.

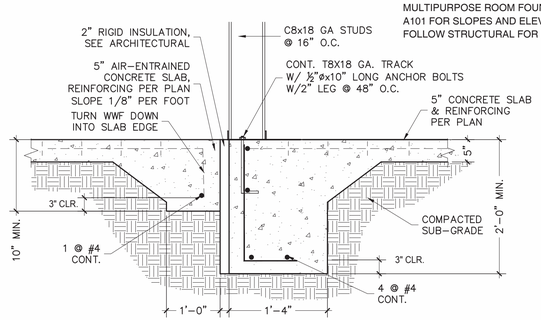

8 S301 EXTERIOR TURN–DOWN FOOTING
3/4" = 1'-0"

RANDALL
Structural Engineering
Jeremy Randall P.E., S. E.
505-463-0258
JEREMYRSE@OUTLOOK.COM

SIMMS TOWER STUDIO 850
400 GOLD AVENUE SW
ALBUQUERQUE, NEW MEXICO
87102
TEL 505.243.8100
G. DONALD DUDLEY AIA
ARCHITECT
ARCHITECTURE • INTERIORS • PLANNING
AIA • NCARB • LEED AP

4/13/20

NEW BUILDING FOR:
RIO RANCHO SENIOR CENTER
CITY OF RIO RANCHO NEW MEXICO

MARK	DATE	DESCRIPTION

GDDA PROJECT NO: 18–137
DATE: 3/24/2020
DRAWN BY: DCaron
CHECKED BY: JR
SET NO:
SHEET TITLE: FOUNDATION DETAILS

S-301

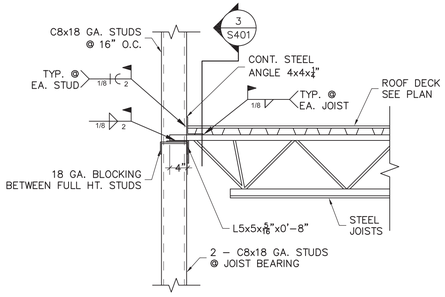

1 S401 JOIST TO STUD WALL
3/4" = 1'-0"

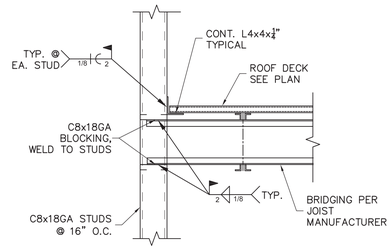

2 S401 BRIDGING @ NON-BEARING WALL
3/4" = 1'-0"

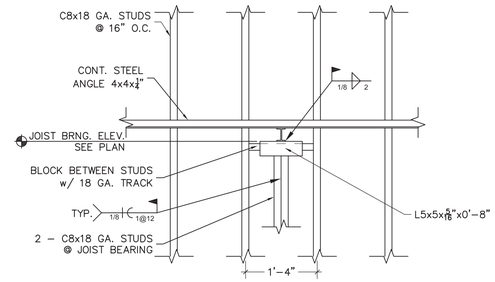

3 S401 JOIST TO STUD WALL
3/4" = 1'-0"

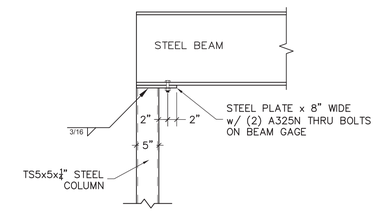

4 S401 STEEL BEAM TO STEEL COLUMN
3/4" = 1'-0"

LIGHT GAGE LINTEL SCHEDULE

OPENING WIDTH	SIZE	STUDS AT BEARING	FULL HEIGHT STUDS	SILL STUDS
0'-0" TO 4'-0"	2-C6x18 GA.	1-C8x18 GA.	1-C8x18 GA.	18 GA. TRACK
4'-1" TO 6'-0"	3-C6x18 GA.	1-C8x18 GA.	2-C8x18 GA.	18 GA. TRACK 1-C8x18 GA.
6'-1" TO 8'-0"	3-C8x16 GA.	2-C8x18 GA.	2-C8x18 GA.	18 GA. TRACK 1-C8x18 GA.
8'-1" TO 12'-0"	TS8x8x3/16	2-C8x16 GA.	2-C8x16 GA.	18 GA. TRACK 2-C8x16 GA.
12'-1" TO 16'-0"	TS8x8x1/4	2-C8x14 GA.	2-C8x14 GA.	18 GA. TRACK 2-C8x16 GA.
16'-1" TO 20'-0"	TS12x8x1/4	2-C8x12 GA.	2-C8x12 GA.	18 GA. TRACK 2-C8x14 GA.

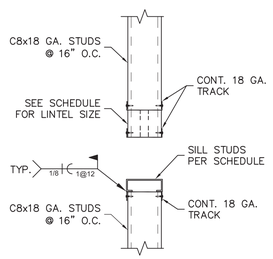

6 S401 LINTEL DETAIL
3/4" = 1'-0"

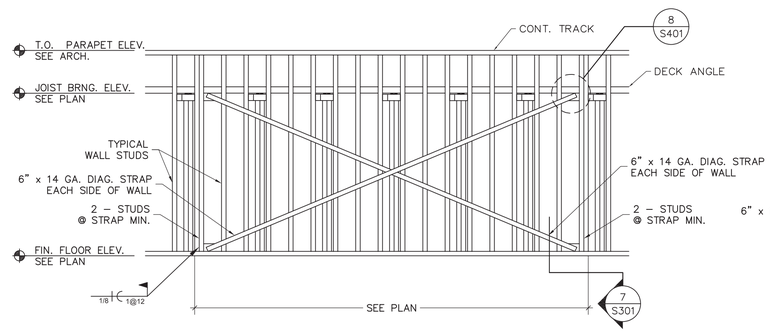

7 S401 ELEVATION OF BEARING BRACED WALL w/ PARAPET
NOT TO SCALE

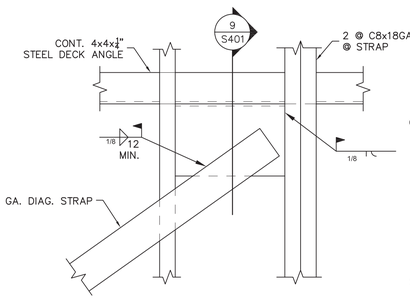

8 S401 TOP OF BRACED WALL
3/4" = 1'-0"

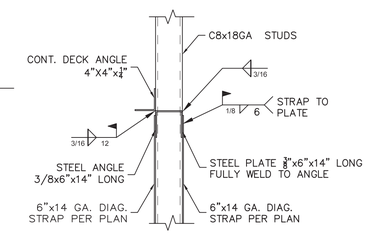

9 S401 TOP OF BRACED WALL
3/4" = 1'-0"

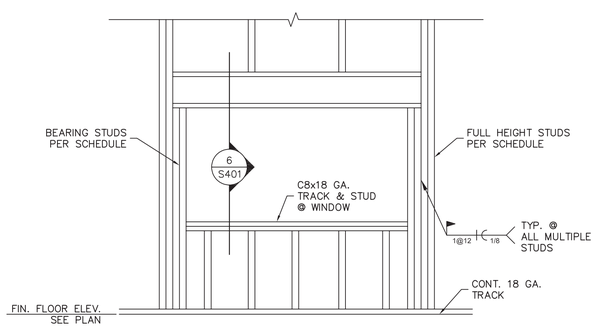

5 S401 TYPICAL OPENING IN STUD WALL
NOT TO SCALE

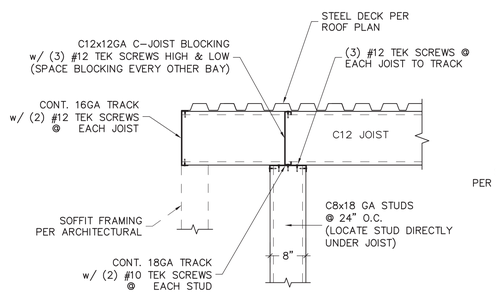

10 S401 JOISTS TO WALL
3/4" = 1'-0"

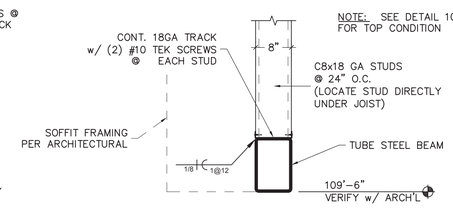

NOTE: SEE DETAIL 10/S401 FOR TOP CONDITION

11 S401 STUDS TO TUBE BEAM
3/4" = 1'-0"

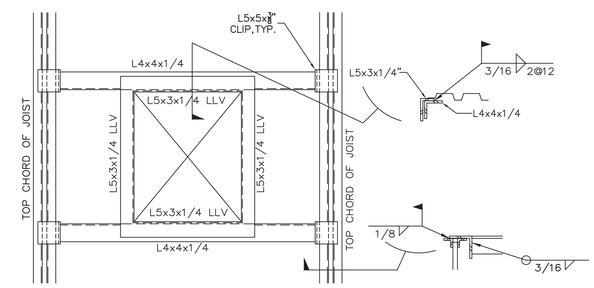

12 S401 ROOF OPENING FRAME
3/4" = 1'-0"

RANDALL
Structural Engineering
Jeremy Randall P.E., S. E.
505-463-0258
JEREMYRSE@OUTLOOK.COM

SIMMS TOWER STUDIO 850
400 GOLD AVENUE SW
ALBUQUERQUE, NEW MEXICO
87102
TEL 505.243.8100
G. DONALD DUDLEY AIA
ARCHITECT
ARCHITECTURE • INTERIORS • PLANNING
AIA • NCARB • LEED AP

NEW BUILDING FOR:
RIO RANCHO SENIOR CENTER
CITY OF RIO RANCHO NEW MEXICO

MARK	DATE	DESCRIPTION

GDDA PROJECT NO: 18-137
DATE: 3/24/2020
DRAWN BY: DCaron
CHECKED BY: JR
SET NO:
SHEET TITLE: FRAMING DETAILS

S-401

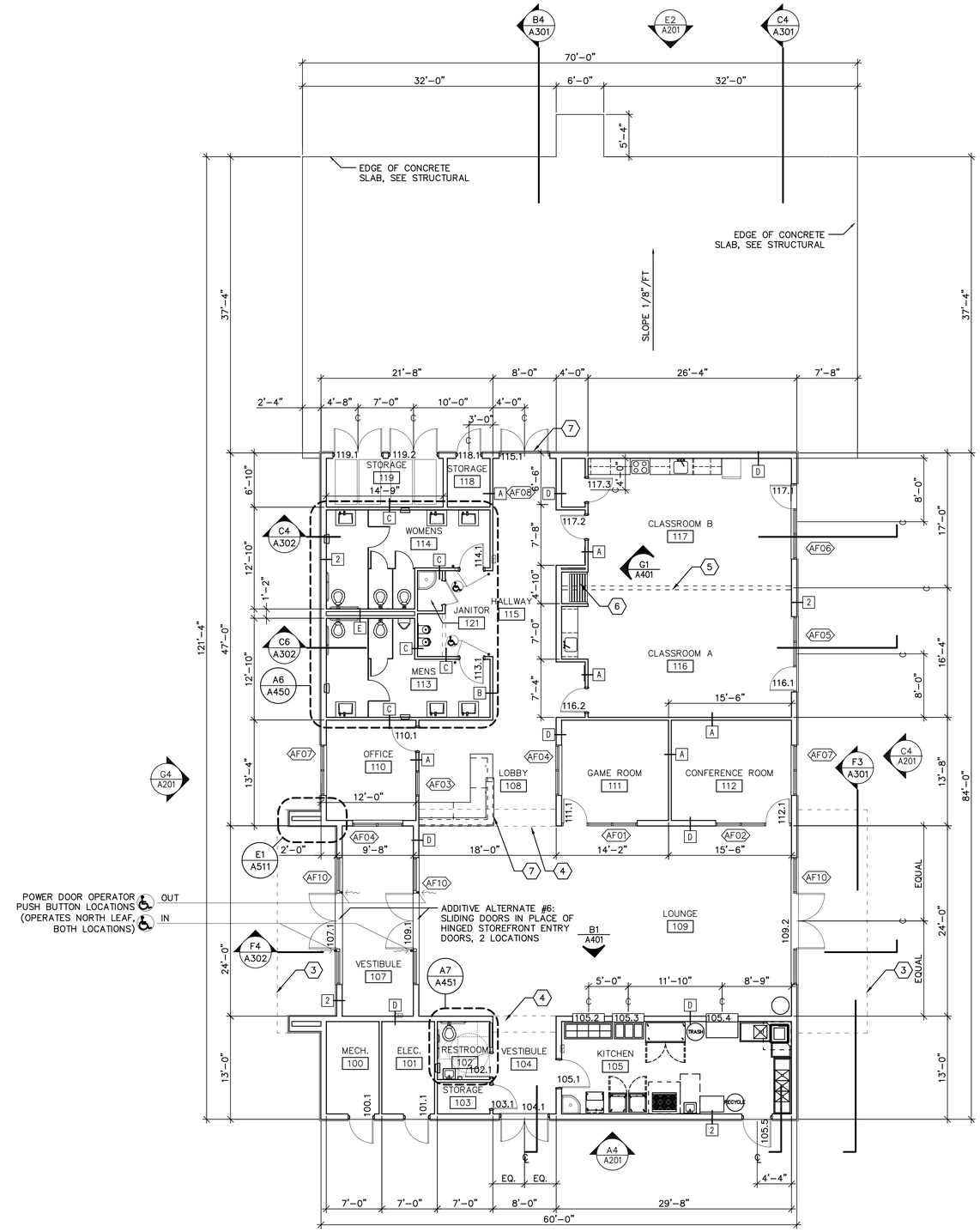

A5 GROUND LEVEL FLOOR PLAN – BASE BID

1/8"=1'-0"

4940 SF (GROSS)

NORTH

GENERAL SHEET NOTES

A. DO NOT SCALE DRAWINGS.
B. CONTRACTOR TO COORDINATE ALL DRAWINGS PRIOR TO CONSTRUCTION.
C. VERIFY EXISTING CONDITIONS IN FIELD. BRING DISCREPANCIES TO ATTENTION OF ARCHITECT.
D. DIMENSIONS ARE TO STUDS UNLESS OTHERWISE NOTED. 'FF' INDICATES THAT THE DIMENSION IS A CRITICAL FINISHED DIMENSION MEASURED TO THE FINISHED FACE OF PARTITIONS.
E. SEE SHEET A501 FOR PARTITION / WALL TYPES.
F. EXIT LIGHTS AND REMOTE INDICATOR LIGHTS LOCATED OVER DOORS SHALL BE CENTERED ON DOOR OPENING U.O.N.
G. EXIT LIGHTS AT CORRIDORS SHALL BE CENTERED U.O.N. AT SOFFITS AND CEILINGS, COORDINATE LIGHTING FIXTURE LOCATIONS WITH MECHANICAL WORK.

SHEET KEYNOTES

1. LINE OF ROOF JOIST, ABOVE, SEE STRUCTURAL
2. FOLDING PARTITION, ADD ALTERNATE #2
3. LINE OF ROOF, ABOVE
4. LINE OF WALL, ABOVE
5. LINE OF BEAM, ABOVE, TO SUPPORT FOLDING PARTITION TRACK
6. FOLDING PARTITION, ADDITIVE ALTERNATE #27. ALUMINUM EXPANSION JOINT COVER
7. RECEPTION DESK. SEE A4/A901

ACCESS CONTROL LEGEND

HC PUSH BUTTON FOR AUTOMATIC DOOR OPENER

FIRE EXTINGUISHER LEGEND

FE SEMI-RECESSED FIRE EXTINGUISHER CABINET

G. DONALD DUDLEY AIA
ARCHITECT
ARCHITECTURE • INTERIORS • PLANNING
AIA • NCARB • LEED AP
SIMMS TOWER STUDIO 850
400 GOLD AVENUE SW
ALBUQUERQUE, NEW MEXICO 87102
TEL 505.243.8100

STATE OF NEW MEXICO
G. DONALD DUDLEY, JR.
No. 3673
4/13/2020
REGISTERED ARCHITECT

NEW BUILDING FOR:

RIO RANCHO SENIOR CENTER

CITY OF RIO RANCHO
NEW MEXICO

MARK	DATE	DESCRIPTION

GDDA PROJECT NO: 18-137

DATE: 4/13/2020

DRAWN BY: gdd/pb

CHECKED BY: gdd/pb

SET NO:

SHEET TITLE: FLOOR PLAN BASE BID

A101

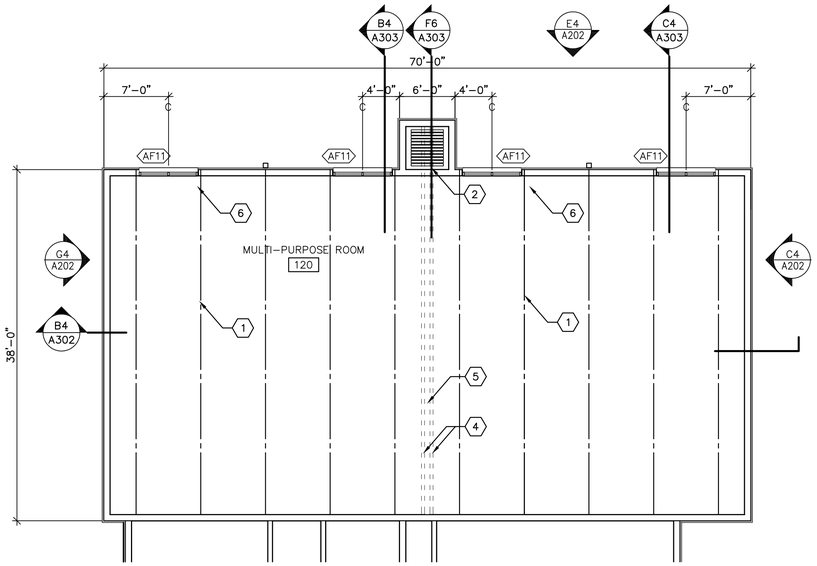

E1 UPPER LEVEL WINDOW PLAN – ADD ALTERNATE #1

1/8"=1'-0"

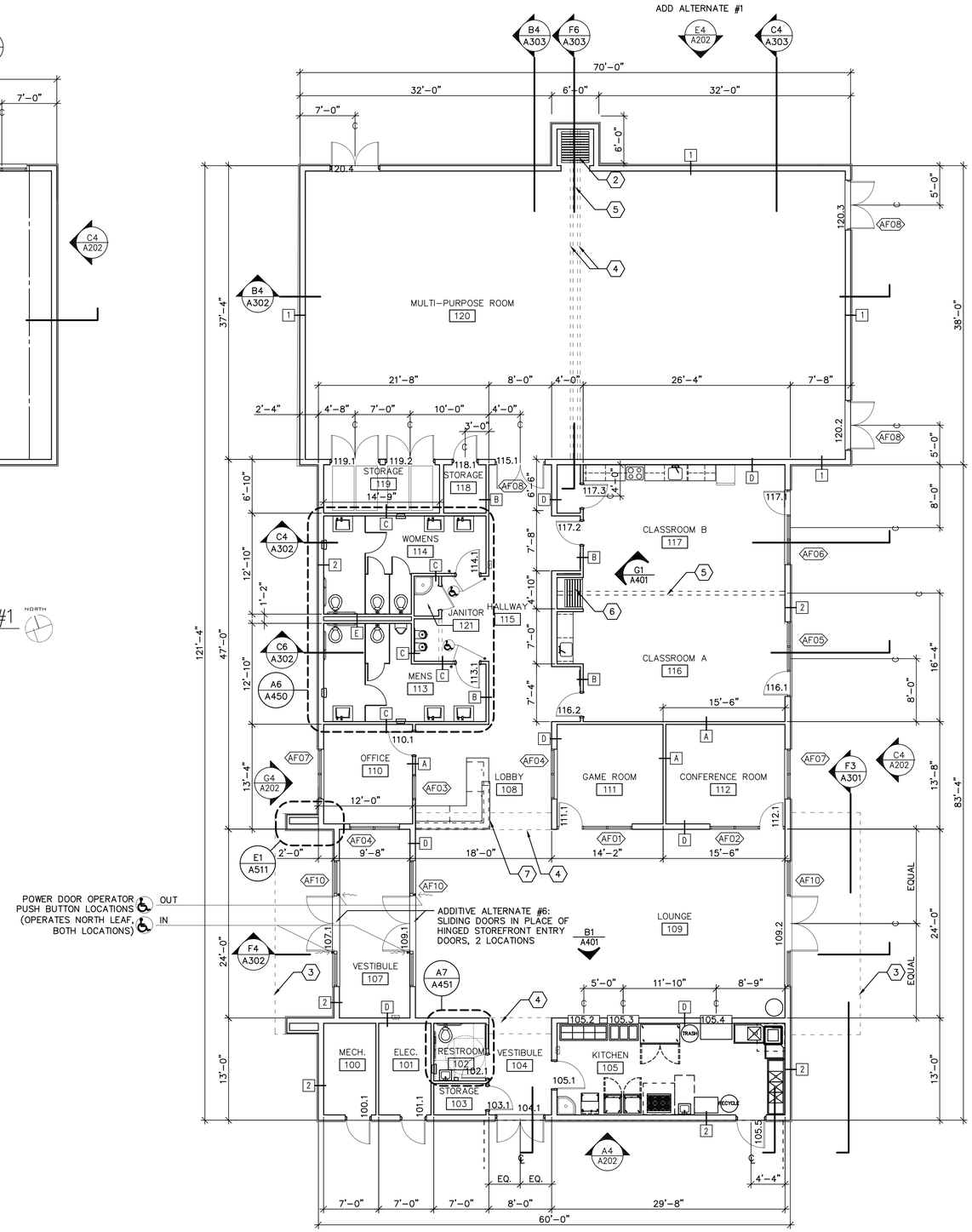

A5 GROUND LEVEL FLOOR PLAN – ADD ALTERNATE #1

1/8"=1'-0"

7612 SF (GROSS)

GENERAL SHEET NOTES

A. DO NOT SCALE DRAWINGS.
B. CONTRACTOR TO COORDINATE ALL DRAWINGS PRIOR TO CONSTRUCTION.
C. VERIFY EXISTING CONDITIONS IN FIELD. BRING DISCREPANCIES TO ATTENTION OF ARCHITECT.
D. DIMENSIONS ARE TO STUDS UNLESS OTHERWISE NOTED. 'FF' INDICATES THAT THE DIMENSION IS A CRITICAL FINISHED DIMENSION MEASURED TO THE FINISHED FACE OF PARTITIONS.
E. SEE SHEET A501 FOR PARTITION / WALL TYPES.
F. EXIT LIGHTS AND REMOTE INDICATOR LIGHTS LOCATED OVER DOORS SHALL BE CENTERED ON DOOR OPENING U.O.N.
G. EXIT LIGHTS AT CORRIDORS SHALL BE CENTERED U.O.N. AT SOFFITS AND CEILINGS, COORDINATE LIGHTING FIXTURE LOCATIONS WITH MECHANICAL WORK.

SHEET KEYNOTES

1. LINE OF ROOF JOIST ABOVE, SEE STRUCTURAL
2. FOLDING PARTITION, ADD ALTERNATE #2
3. LINE OF ROOF, ABOVE
4. LINE OF WALL, ABOVE
5. LINE OF BEAM, ABOVE, TO SUPPORT FOLDING PARTITION TRACK
6. FOLDING PARTITION, ADD ALTERNATE #2
7. RECEPTION DESK. SEE A4/A901

ACCESS CONTROL LEGEND

HC PUSH BUTTON FOR AUTOMATIC DOOR OPENER

FIRE EXTINGUISHER LEGEND

FE SEMI-RECESSED FIRE EXTINGUISHER CABINET

SIMMS TOWER STUDIO 850
400 GOLD AVENUE SW
ALBUQUERQUE, NEW MEXICO 87102
TEL 505.243.8100

G. DONALD DUDLEY AIA
ARCHITECT
ARCHITECTURE • INTERIORS • PLANNING
AIA • NCARB • LEED AP

STATE OF NEW MEXICO
G. DONALD DUDLEY, JR.
No. 3673
4/13/2020
REGISTERED ARCHITECT

NEW BUILDING FOR:

RIO RANCHO SENIOR CENTER

CITY OF RIO RANCHO
NEW MEXICO

MARK	DATE	DESCRIPTION

GDDA PROJECT NO: 18-137

DATE: 4/13/2020

DRAWN BY: gdd/pb

CHECKED BY: gdd/pb

SET NO:

SHEET TITLE: FLOOR PLAN ADD ALTERNATE #1

A102

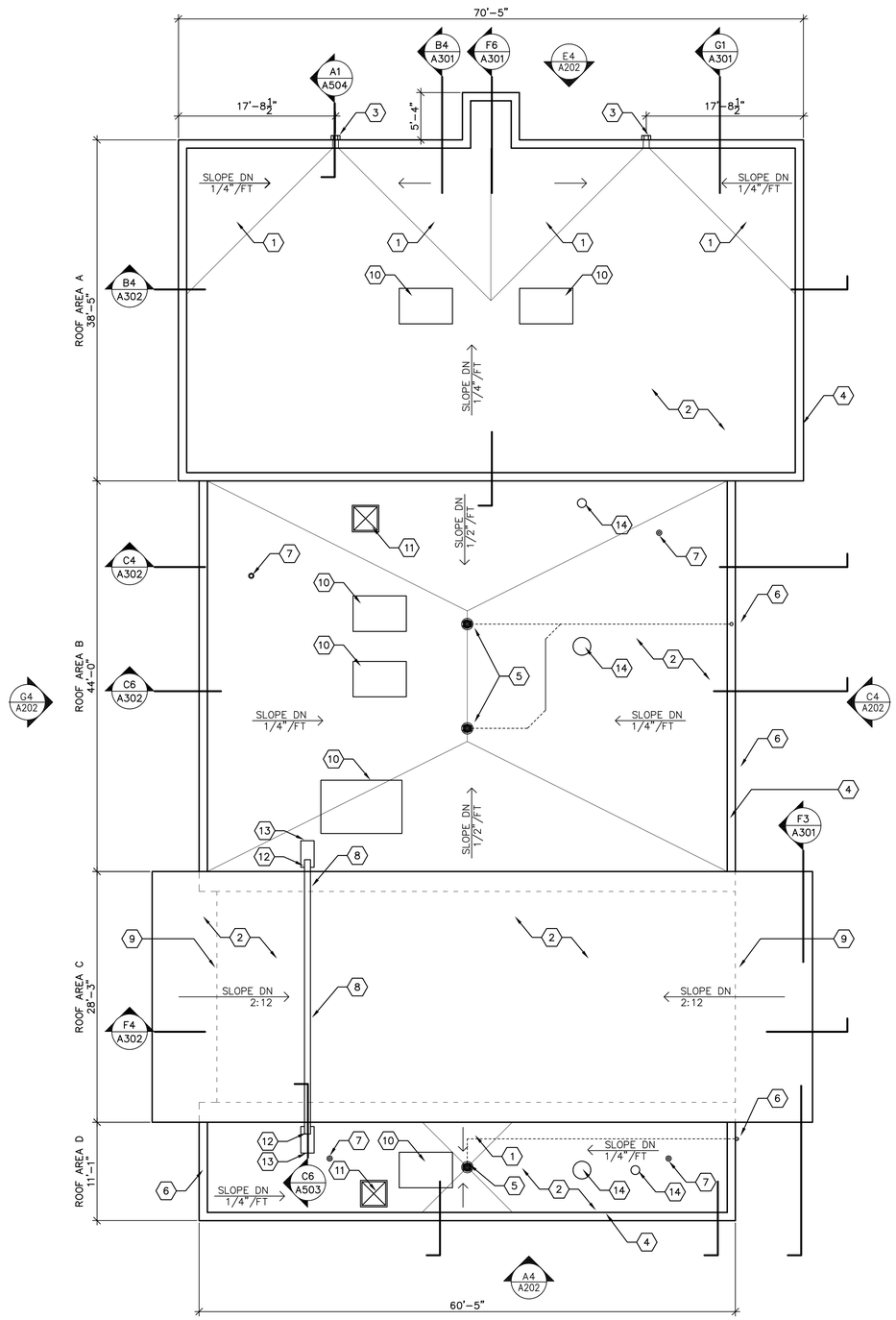

A1 ROOF PLAN – ADD ALTERNATE #1

1/8"=1'-0" 7612 SF (GROSS)

NORTH

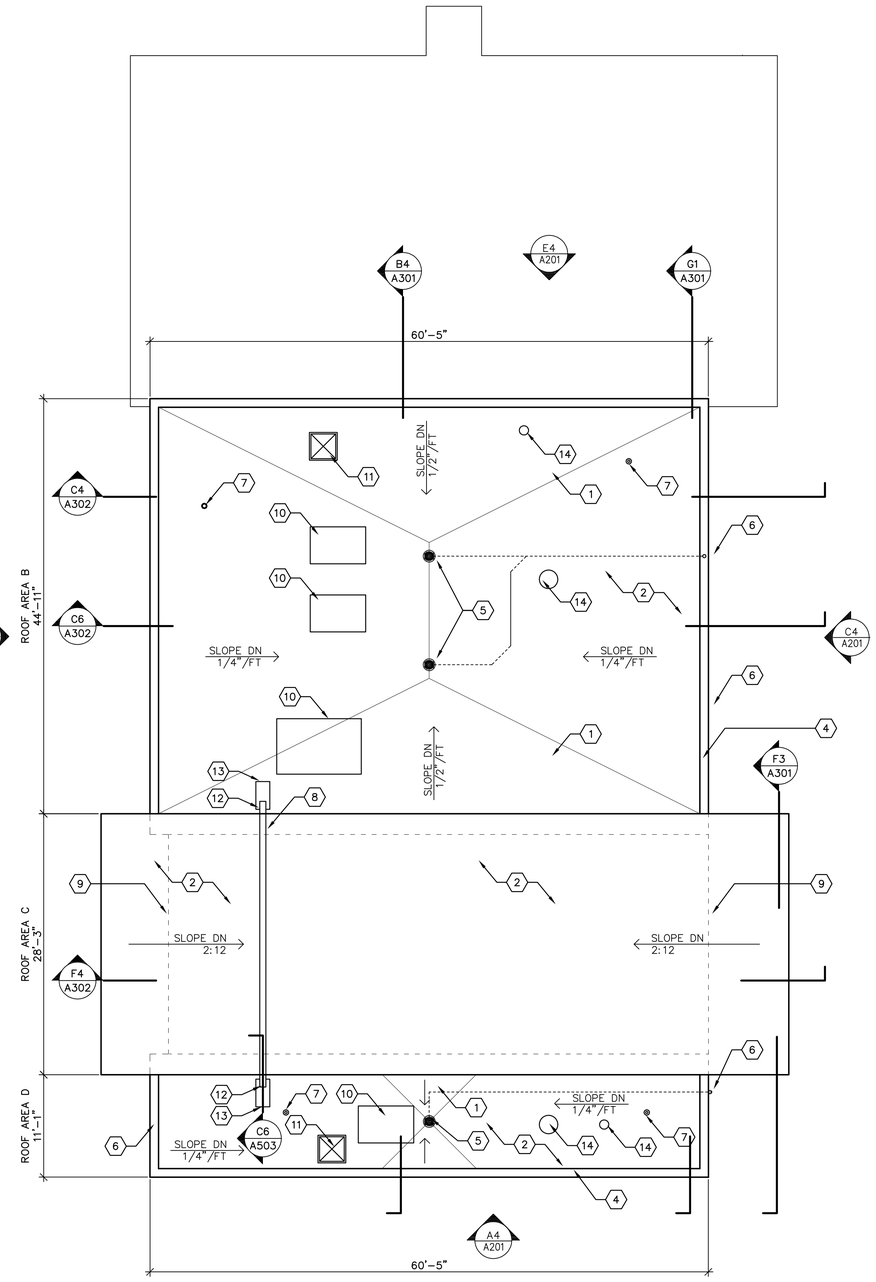

A1 ROOF PLAN – BASE BID

1/8"=1'-0" 4940 SF (GROSS)

NORTH

GENERAL SHEET NOTES

A. DO NOT SCALE DRAWINGS.
B. CONTRACTOR TO COORDINATE ALL DRAWINGS PRIOR TO CONSTRUCTION.
C. VERIFY EXISTING CONDITIONS IN FIELD. BRING DISCREPANCIES TO ATTENTION OF ARCHITECT.

SHEET KEYNOTES

1. RIGID INSULATION ROOF CRICKET.
2. 80 MIL WHITE TPO MEMBRANE ROOF, SLOPE ¼"/FT, U.O.N.
3. 16 GA. METAL SCUPPER CONDUCTOR HEAD AND DOWNSPOUT. MATCH ALUMINUM STORE FRONT. COORDINATE WITH ELEVATIONS FOR LOCATIONS. SEE DETAILS A1 & A3/A504.
4. PARAPET COPING. SEE SPECIFICATIONS.
5. ROOF DRAIN. SEE DETAIL C3/A502
6. ROOF DRAIN DOWNSPOUT OUTLET. COORDINATE WITH ELEVATIONS FOR MOUNTING HEIGHTS. SEE SPECIFICATIONS AND PLUMBING FIXTURE SCHEDULE.
7. VENT THROUGH ROOF. SEE PLUMBING.
8. 22 GA. STEEL GUTTER LINED WITH 80 MIL WHITE TPO MEMBRANE ROOFING. DOWNSPOUT OUTLETS TO ROOF BELOW. SLOPE 1/8"/FT. SEE DETAIL F6/A503
9. LINE OF WALL, BELOW
10. ROOF TOP MECHANICAL EQUIPMENT ON CURB. SEE MECHANICAL FOR DIMENSIONS.
11. 30"X36" ROOF HATCH WITH ACCESS LADDER
12. CANALE GUTTER EXTENSION, SEE C6/A503
13. CONCRETE SPLASH BLOCK, SEE SPECIFICATIONS
14. EXHAUST VENT THROUGH ROOF. SEE MECHANICAL.

SIMMS TOWER STUDIO 850
400 GOLD AVENUE SW
ALBUQUERQUE, NEW MEXICO
87102
TEL 505.243.8100

G. DONALD DUDLEY AIA
ARCHITECT
ARCHITECTURE • INTERIORS • PLANNING
AIA • NCARB • LEED AP

STATE OF NEW MEXICO
G. DONALD DUDLEY, JR.
No. 3673
4/13/2020
REGISTERED ARCHITECT

NEW BUILDING FOR:

RIO RANCHO SENIOR CENTER

CITY OF RIO RANCHO
NEW MEXICO

MARK	DATE	DESCRIPTION

GDDA PROJECT NO: 18-137

DATE: 4/13/2020

DRAWN BY: gdd/pb

CHECKED BY: gdd/pb

SET NO:

SHEET TITLE: ROOF PLAN

A103

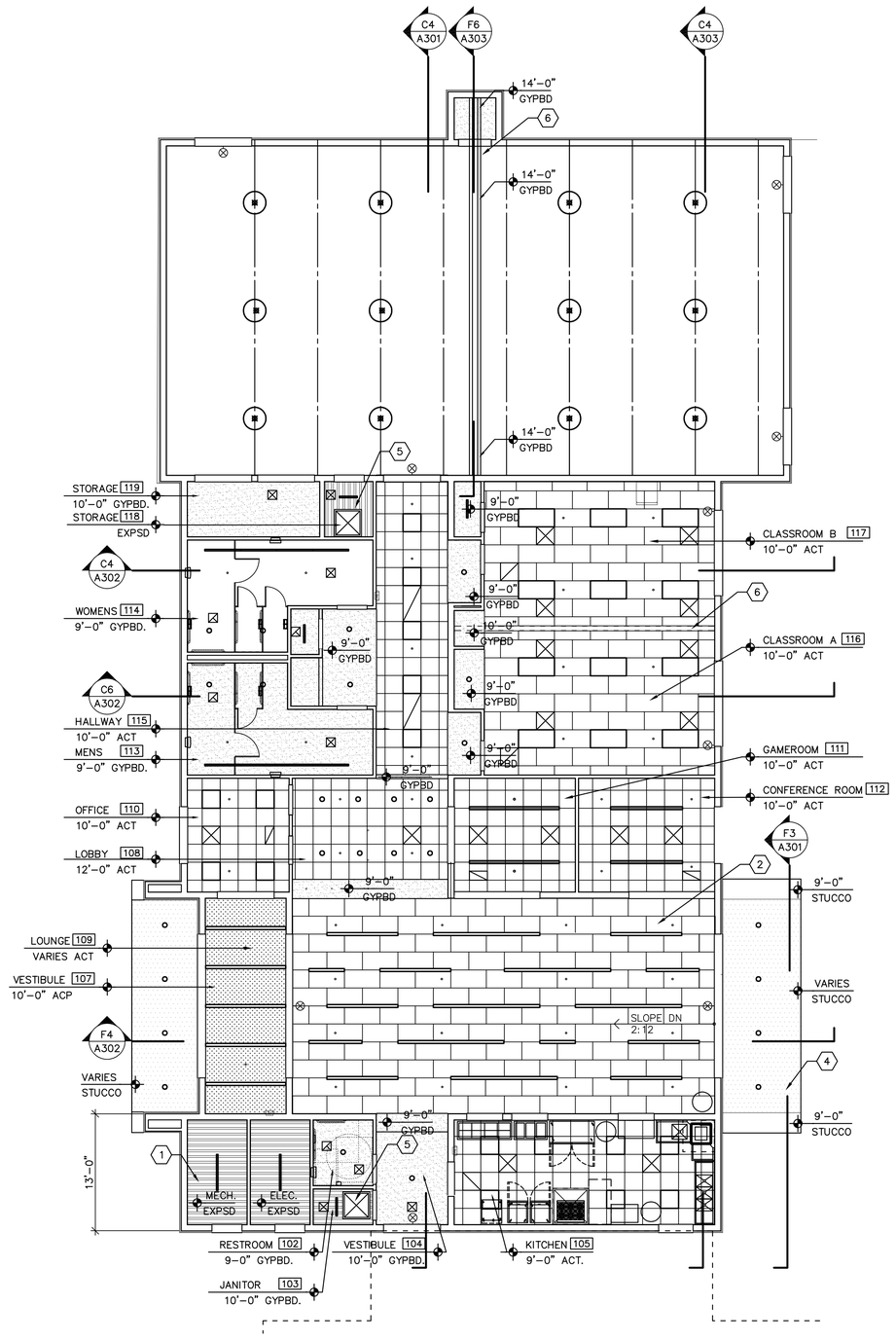

A1 REFLECTED CEILING PLAN – ADD ALTERNATE #1

1/8"=1'-0" 7612 SF (GROSS)

NORTH

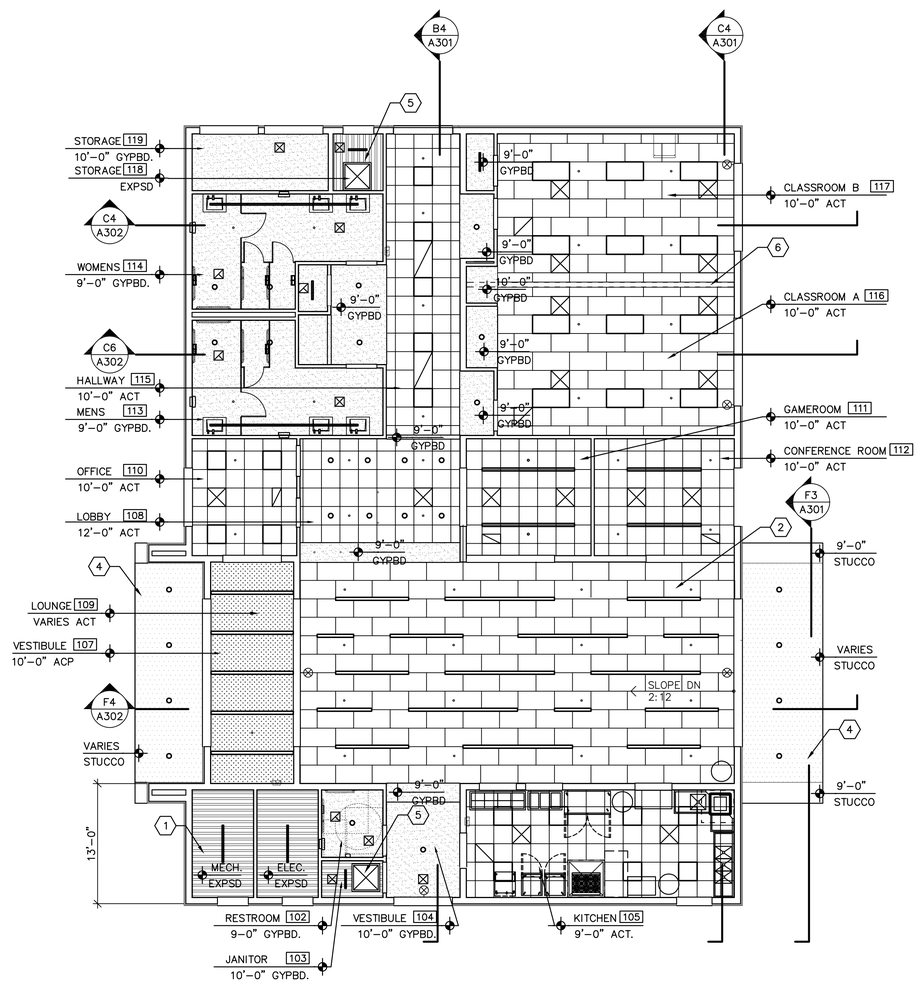

A1 REFLECTED CEILING PLAN – BASE BID

1/8"=1'-0" 4940 SF (GROSS)

NORTH

GENERAL SHEET NOTES

A. DO NOT SCALE DRAWINGS.
B. CONTRACTOR TO COORDINATE ALL DRAWINGS PRIOR TO CONSTRUCTION.
C. VERIFY EXISTING CONDITIONS IN FIELD. BRING DISCREPANCIES TO ATTENTION OF ARCHITECT.
D. DIMENSIONS ARE TO STUDS UNLESS OTHERWISE NOTED. 'FF' INDICATES THAT THE DIMENSION IS A CRITICAL FINISHED DIMENSION MEASURED TO THE FINISHED FACE OF PARTITIONS.
E. SEE SHEET A501 FOR PARTITION / WALL TYPES.
F. EXIT LIGHTS AND REMOTE INDICATOR LIGHTS LOCATED OVER DOORS SHALL BE CENTERED ON DOOR OPENING U.O.N.
G. EXIT LIGHTS AT CORRIDORS SHALL BE CENTERED U.O.N. AT SOFFITS AND CEILINGS, COORDINATE LIGHTING FIXTURE LOCATIONS WITH MECHANICAL WORK.

FIRE SPRINKLER NOTE

FIRE SPRINKLER HEADS SHALL BE CENTERED IN CEILING TILES AS INDICATED ON DRAWING. WHERE CEILING TILES DO NOT EXIST, CENTER HEADS BETWEEN WALLS. COORDINATE MECHANICAL AND ELECTRICAL FIXTURES, ALIGN/CENTER WITH FIXTURES AS INDICATED ON DRAWINGS.

FIRE SPRINKLER CONTRACTOR SHALL SUBMIT SHOP DRAWINGS FOR REVIEW AND APPROVAL PRIOR TO WORK.

REFER TO FP001 AND FP101.

LEGEND

- EXPOSED STRUCTURE (EXPSD)
- GYPSUM BOARD, PAINTED (GYPBD)
- ACOUSTICAL CEILING TILE (ACT)
- ACOUSTICAL CLOUD PANELS (ACP)
- STUCCO
- MECHANICAL DIFFUSER, SEE MECHANICAL
- LIGHT FIXTURE, SEE ELECTRICAL
- LIGHT FIXTURE, SEE ELECTRICAL
- CEILING HEIGHT DIMENSION ABOVE FINISH FLOOR
- EM — WALL MOUNTED EXIT SIGN END MOUNT
- WALL MOUNTED EXIT SIGN
- CEILING MOUNTED EXIT SIGN
- EMERGENCY LIGHT

SHEET KEYNOTES

1. EXPOSED STEEL STRUCTURE. BARE STEEL FINISH.
2. ACOUSTICAL CEILING TILE, SLOPED WITH STRUCTURE
3. ACOUSTICAL CEILING TILE
4. CEMENTITIOUS STUCCO SOFFIT
5. 30"X36" ROOF ACCESS HATCH WITH LADDER
6. PONY WALL FOR FOLDABLE PARTITION HARDWARE

SIMMS TOWER STUDIO 850
400 GOLD AVENUE SW
ALBUQUERQUE, NEW MEXICO 87102
TEL 505.243.8100

G. DONALD DUDLEY AIA
ARCHITECT
ARCHITECTURE • INTERIORS • PLANNING
AIA • NCARB • LEED AP

STATE OF NEW MEXICO
G. DONALD DUDLEY, JR.
No. 3673
4/13/2020
REGISTERED ARCHITECT

NEW BUILDING FOR:

RIO RANCHO SENIOR CENTER

CITY OF RIO RANCHO NEW MEXICO

MARK	DATE	DESCRIPTION

GDDA PROJECT NO: 18-137

DATE: 4/13/2020

DRAWN BY: gdd/pb

CHECKED BY: gdd/pb

SET NO:

SHEET TITLE: REFLECTED CEILING PLAN

A111

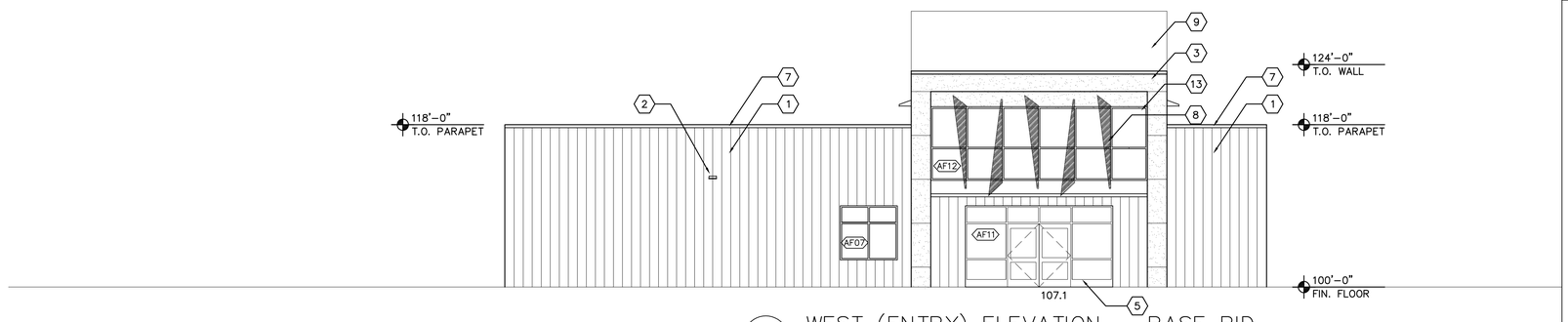

G4 WEST (ENTRY) ELEVATION – BASE BID
1/8"=1'-0"

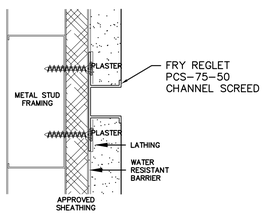

E2 STUCCO DETAIL
6"=1'-0"

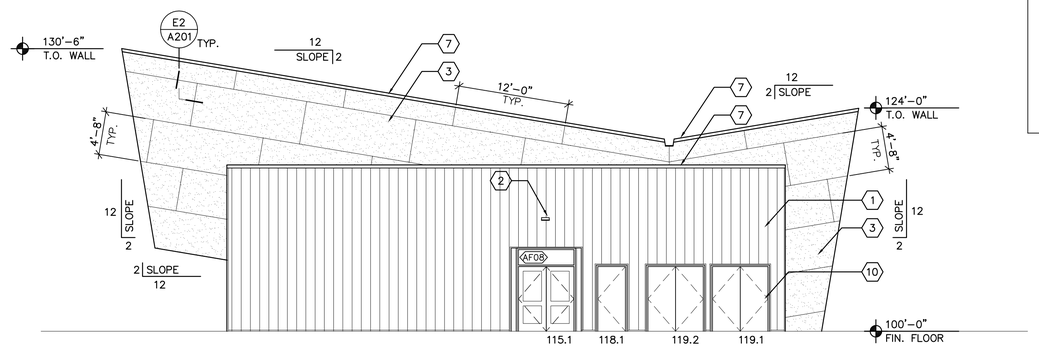

E4 NORTH ELEVATION – BASE BID
1/8"=1'-0"

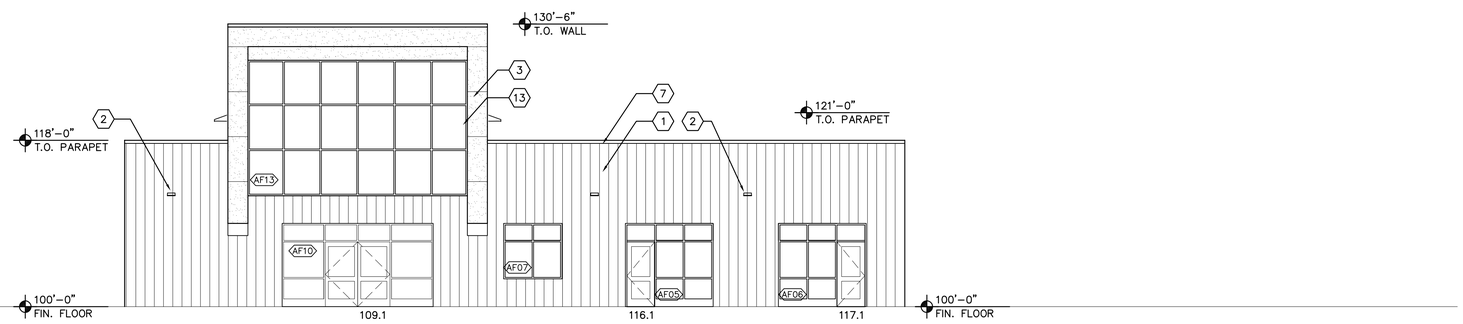

C4 EAST ELEVATION – BASE BID
1/8"=1'-0"

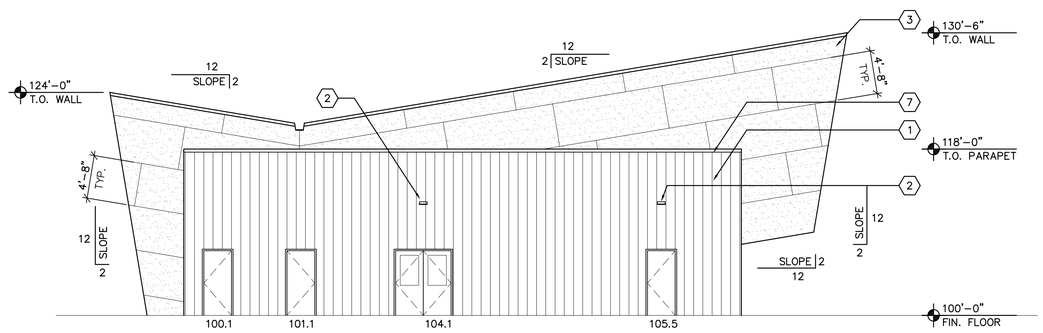

A4 SOUTH ELEVATION – BASE BID
1/8"=1'-0"

SHEET KEYNOTES (#)

1. PRE-FINISHED 12" FLUSH WALL 22 GA. METAL PANEL
2. LIGHT FIXTURE, SEE ELECTRICAL
3. THREE-COAT CEMENTITIOUS STUCCO FINISH
4. ROOF SCUPPER, CONDUCTOR HEAD AND DOWNSPOUT, SEE A1 & A3/A504. COLOR TO MATCH ALUMINUM STOREFRONT WINDOW UNITS.
5. ALUMINUM STOREFRONT ENTRY DOOR (ADDITIVE ALTERNATE #5: SENSOR-OPERATED SLIDING ENTRY DOOR SYSTEM, TWO LOCATIONS)
6. ALUMINUM STOREFRONT WINDOW UNIT
7. METAL CAP FLASHING
8. TENSILE FABRIC SHADE STRUCTURE
9. 80 MIL TPO ROOF MEMBRANE, WHITE COLOR
10. INSULATED HOLLOW METAL DOOR AND FRAME
11. LINE OF CROSS-BRACING, SEE STRUCTURAL
12. LINE OF ROOF, BEYOND
13. ALUMINUM CURTAIN WALL SYSTEM

G. DONALD DUDLEY AIA
ARCHITECT
ARCHITECTURE • INTERIORS • PLANNING
AIA • NCARB • LEED AP
SIMMS TOWER STUDIO 850
400 GOLD AVENUE SW
ALBUQUERQUE, NEW MEXICO 87102
TEL 505.243.8100

STATE OF NEW MEXICO
G. DONALD DUDLEY, JR.
No. 3673
4/13/2020
REGISTERED ARCHITECT

NEW BUILDING FOR:
RIO RANCHO SENIOR CENTER
CITY OF RIO RANCHO
NEW MEXICO

MARK	DATE	DESCRIPTION

GDDA PROJECT NO: 18-137
DATE: 4/13/2020
DRAWN BY: gdd/pb
CHECKED BY: gdd/pb
SET NO:
SHEET TITLE: ELEVATIONS – BASE BID

A201

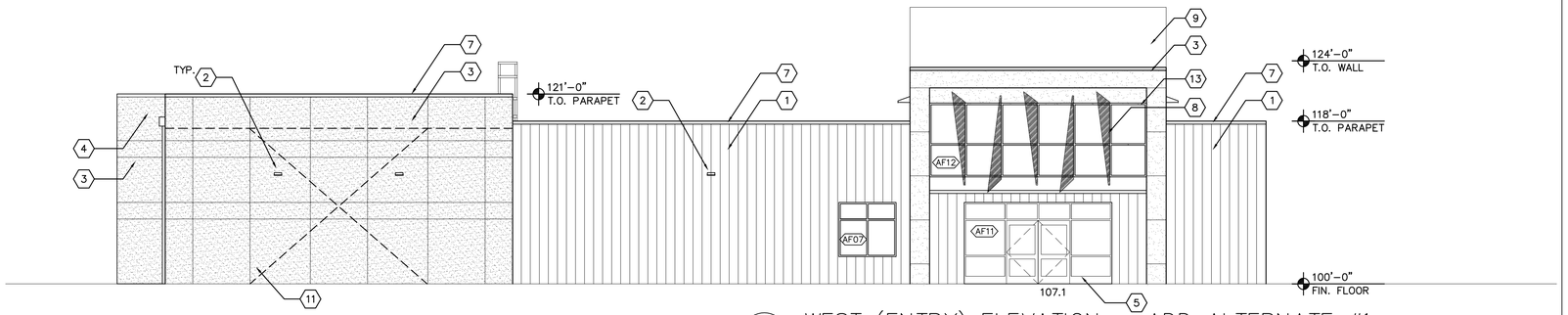

G4 WEST (ENTRY) ELEVATION – ADD ALTERNATE #1
1/8"=1'-0"

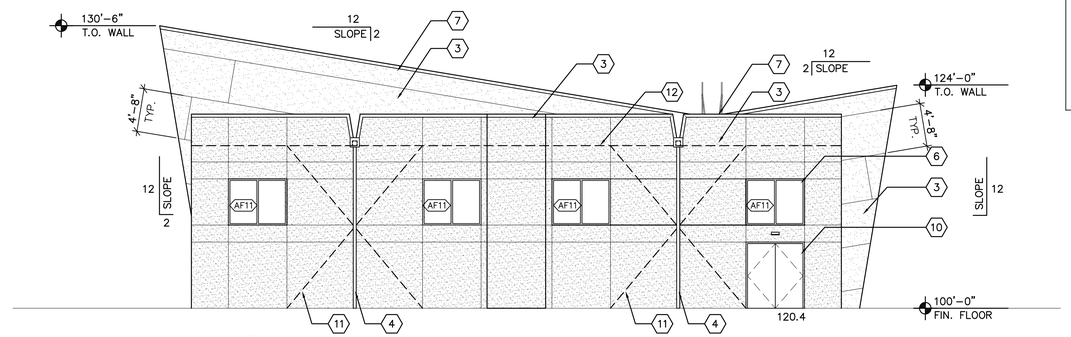

E4 NORTH ELEVATION – ADD. ALTERNATE #1
1/8"=1'-0"

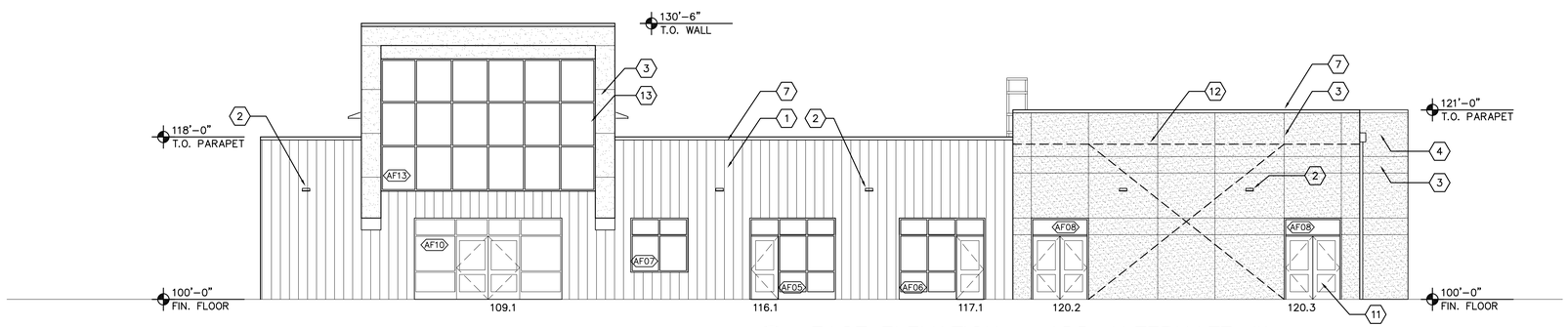

C4 EAST ELEVATION – ADD ALTERNATE #1
1/8"=1'-0"

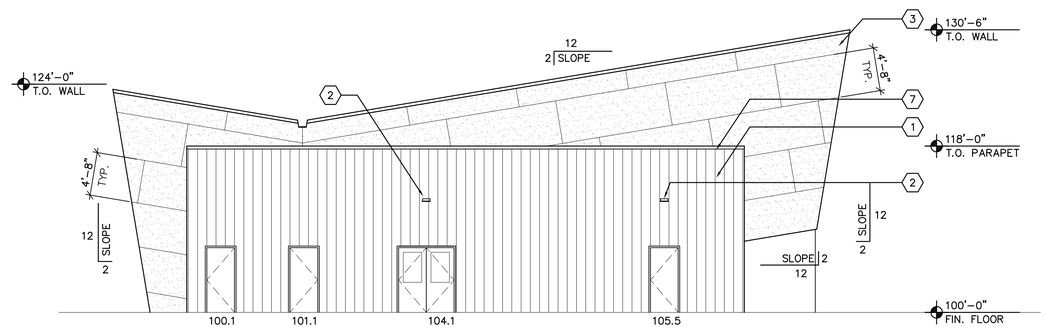

A4 SOUTH ELEVATION – ADD ALTERNATE #1
1/8"=1'-0"

SHEET KEYNOTES (#)

1. PRE–FINISHED 12" FLUSH WALL 22 GA. METAL PANEL
2. LIGHT FIXTURE, SEE ELECTRICAL
3. THREE–COAT CEMENTITIOUS STUCCO FINISH
4. ROOF SCUPPER, CONDUCTOR HEAD AND DOWNSPOUT, SEE A1 & A3/A504. COLOR TO MATCH ALUMINUM STOREFRONT WINDOW UNITS.
5. ALUMINUM STOREFRONT ENTRY DOOR (ADDITIVE ALTERNATE #5: SENSOR–OPERATED SLIDING ENTRY DOOR SYSTEM, TWO LOCATIONS)
6. ALUMINUM STOREFRONT WINDOW UNIT
7. METAL CAP FLASHING
8. TENSILE FABRIC SHADE STRUCTURE
9. 80 MIL TPO ROOF MEMBRANE, WHITE COLOR
10. INSULATED HOLLOW METAL DOOR AND FRAME
11. LINE OF CROSS–BRACING, SEE STRUCTURAL
12. LINE OF ROOF, BEYOND
13. ALUMINUM CURTAIN WALL SYSTEM

G. DONALD DUDLEY AIA
ARCHITECT
ARCHITECTURE • INTERIORS • PLANNING
AIA • NCARB • LEED AP
SIMMS TOWER STUDIO 850
400 GOLD AVENUE SW
ALBUQUERQUE, NEW MEXICO 87102
TEL 505.243.8100

STATE OF NEW MEXICO
G. DONALD DUDLEY, JR.
No. 3673
4/13/2020
REGISTERED ARCHITECT

NEW BUILDING FOR:
RIO RANCHO SENIOR CENTER
CITY OF RIO RANCHO
NEW MEXICO

MARK	DATE	DESCRIPTION

GDDA PROJECT NO: 18–137
DATE: 4/13/2020
DRAWN BY: gdd/pb
CHECKED BY: gdd/pb
SET NO:
SHEET TITLE: ELEVATIONS – ADD ALTERNATE #1

A202

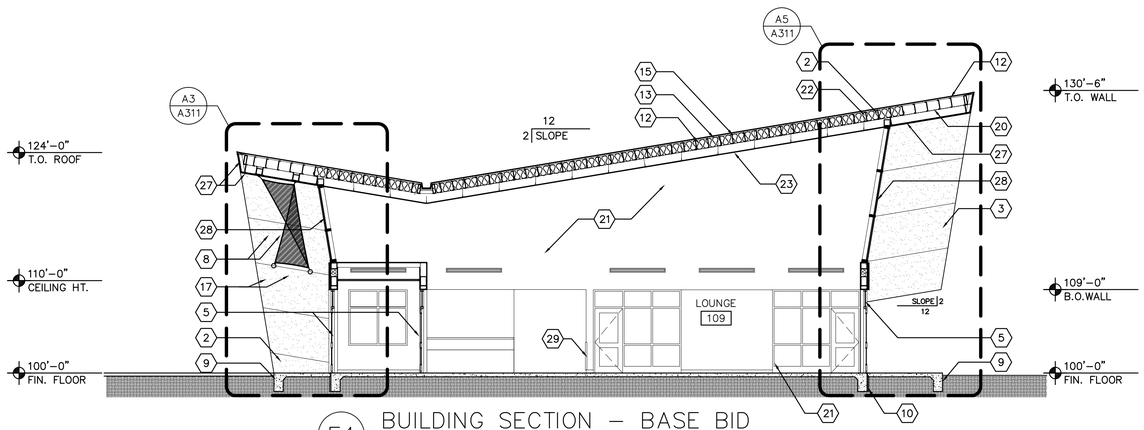

F4 BUILDING SECTION – BASE BID
1/8"=1'-0"

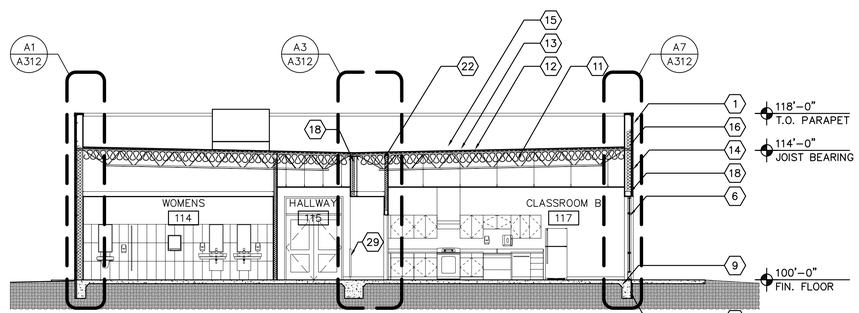

C4 BUILDING SECTION – BASE BID
1/8"=1'-0"

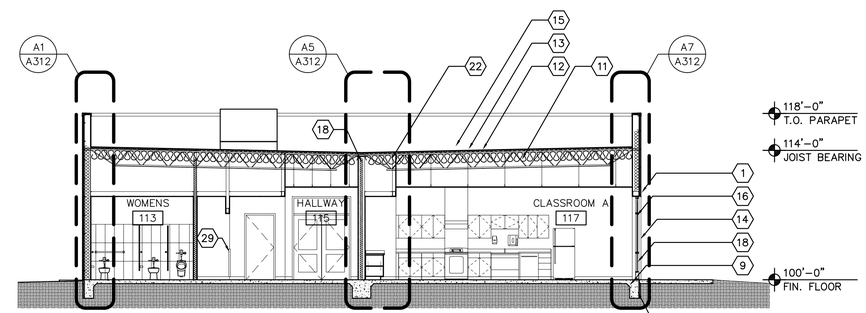

C6 BUILDING SECTION – BASE BID
1/8"=1'-0"

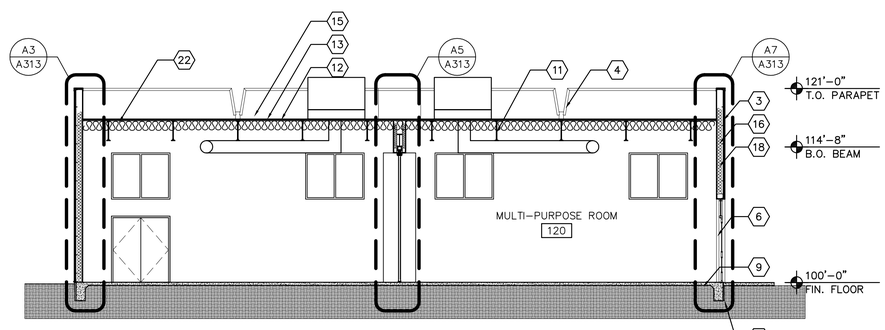

B4 BUILDING SECTION – ADD ALTERNATE #1
1/8"=1'-0"

SHEET KEYNOTES (#)

1. PRE-FINISHED 12" FLUSH 22 GA. METAL WALL PANEL, OR EQUAL, OVER 1.5" RIGID INSULATION
2. ROOF JOIST, SEE STRUCTURAL
3. THREE-COAT CEMENTITIOUS STUCCO FINISH, OVER 17 GA. REINFORCEMENT MESH, OVER WRB MEMBRANE, OVER 1.5" RIGID INSULATION
4. ROOF SCUPPER AND DOWNSPOUT
5. ALUMINUM STOREFRONT ENTRY DOOR UNIT (ADD ALTERNATE #6: SENSOR-OPERATED SLIDING DOOR UNIT)
6. ALUMINUM STOREFRONT WINDOW UNIT
7. PRE-FINISHED METAL CAP FLASHING
8. TENSILE FABRIC SHADE STRUCTURE
9. CONCRETE SLAB, SEE STRUCTURAL
10. 2" EPS RIGID INSULATION BOARD
11. OPEN-WEB BAR JOIST, SEE STRUCTURAL
12. 1.5" STEEL B-DECK, SEE STRUCTURAL
13. 1/2" GYPSUM-BASED ROOF COVER BOARD
14. 1.5" RIGID INSULATION BOARD
15. 80 MIL THICKNESS TPO ROOF MEMBRANE, WHITE COLOR
16. R-19 FIBERGLASS BATT INSULATION
17. 4"x4" TUBE STEEL SUPPORT FOR TENSILE FABRIC
18. 8" METAL WALL FRAMING, SEE STRUCTURAL
19. 6" METAL WALL FRAMING, SEE STRUCTURAL
20. 14" STEEL C-JOIST ROOF FRAMING, SEE STRUCTURAL
21. 5/8" GYPSUM BOARD, PAINT FINISH
22. R-38 FIBERGLASS BATT INSULATION, WITH WHITE VINYL FACING IN EXPOSED AREAS
23. SUSPENDED ACOUSTICAL TILE CEILING, SEE REFLECTED CEILING PLAN SHEET A111
24. 80 MIL THICKNESS TPO MEMBRANE LINED INTERNAL GUTTER, SLOPE 1/4"/FT MIN TO DOWNSPOUT
25. 4" METAL WALL FRAMING
26. STEEL BEAM, SEE STRUCTURAL
27. THREE-COAT CEMENTITIOUS STUCCO FINISH, OVER 17 GA. REINFORCEMENT MESH, OVER WRB MEMBRANE, OVER 5/8" EXTERIOR RATED GYPSUM BOARD
28. ALUMINUM CURTAIN WALL SYSTEM
29. CORNER GUARD, TYP. ON OUTSIDE CORNERS

SIMMS TOWER STUDIO 850
400 GOLD AVENUE SW
ALBUQUERQUE, NEW MEXICO
87102
TEL 505.243.8100

G. DONALD DUDLEY AIA
ARCHITECT
ARCHITECTURE • INTERIORS • PLANNING
AIA • NCARB • LEED AP

STATE OF NEW MEXICO
G. DONALD DUDLEY, JR.
No. 3673
4/13/2020
REGISTERED ARCHITECT

NEW BUILDING FOR:

RIO RANCHO
SENIOR CENTER

CITY OF RIO RANCHO
NEW MEXICO

MARK	DATE	DESCRIPTION

GDDA PROJECT NO: 18-137

DATE: 4/13/2020

DRAWN BY: gdd/pb

CHECKED BY: gdd/pb

SET NO:

SHEET TITLE: BUILDING SECTIONS

A302

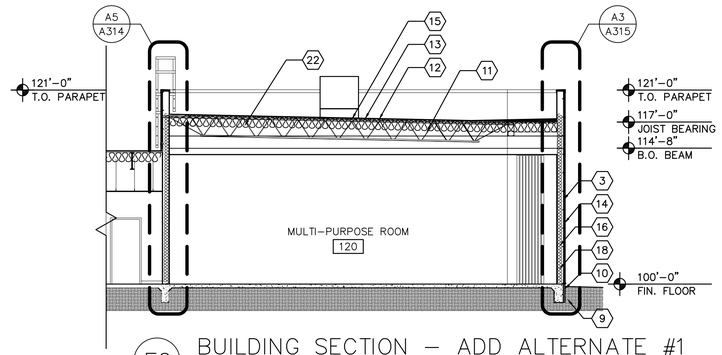

F6 BUILDING SECTION – ADD ALTERNATE #1
1/8"=1'-0"

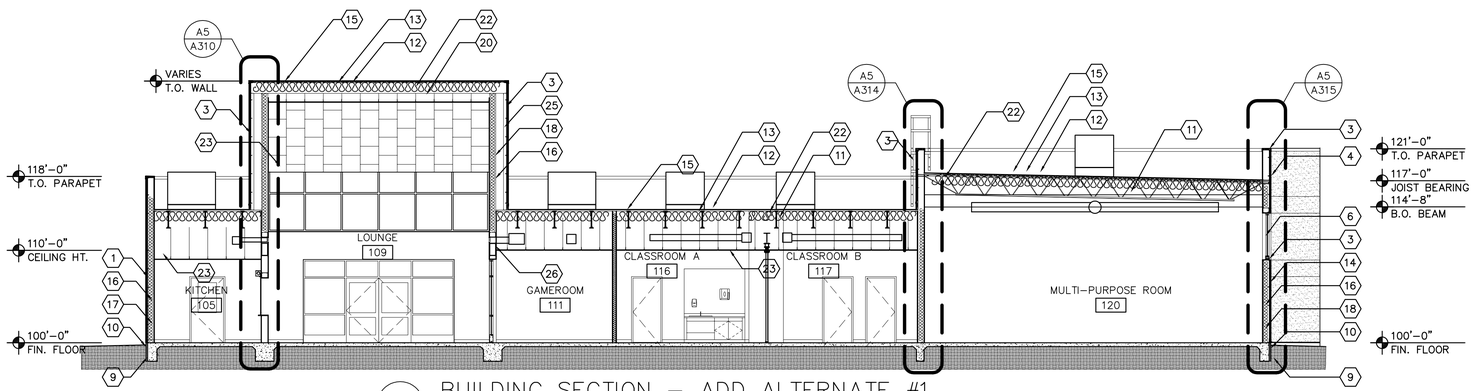

C4 BUILDING SECTION – ADD ALTERNATE #1
1/8"=1'-0"

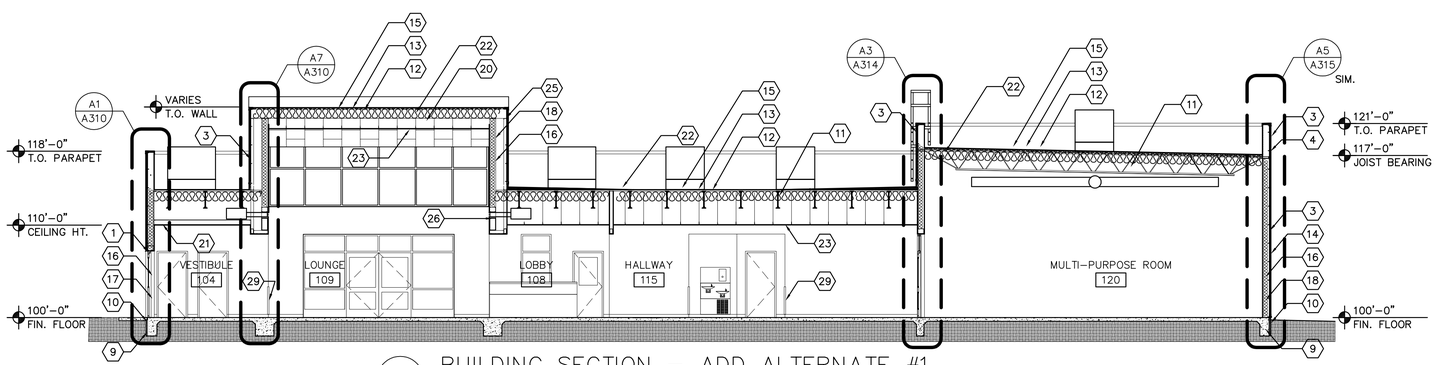

B4 BUILDING SECTION – ADD ALTERNATE #1
1/8"=1'-0"

SHEET KEYNOTES (#)

1. PRE–FINISHED 12" FLUSH 22 GA. METAL WALL PANEL, OR EQUAL, OVER 1.5" RIGID INSULATION
2. ROOF JOIST, SEE STRUCTURAL
3. THREE–COAT CEMENTITIOUS STUCCO FINISH, OVER 17 GA. REINFORCEMENT MESH, OVER WRB MEMBRANE, OVER 1.5" RIGID INSULATION
4. ROOF SCUPPER AND DOWNSPOUT
5. ALUMINUM STOREFRONT ENTRY DOOR UNIT (ADD ALTERNATE #6: SENSOR–OPERATED SLIDING DOOR UNIT)
6. ALUMINUM STOREFRONT WINDOW UNIT
7. PRE–FINISHED METAL CAP FLASHING
8. TENSILE FABRIC SHADE STRUCTURE
9. CONCRETE SLAB, SEE STRUCTURAL
10. 2" EPS RIGID INSULATION BOARD
11. OPEN–WEB BAR JOIST, SEE STRUCTURAL
12. 1.5" STEEL B–DECK, SEE STRUCTURAL
13. 1/2" GYPSUM–BASED ROOF COVER BOARD
14. 1.5" RIGID INSULATION BOARD
15. 80 MIL THICKNESS TPO ROOF MEMBRANE, WHITE COLOR
16. R–19 FIBERGLASS BATT INSULATION
17. 4"X4" TUBE STEEL SUPPORT FOR TENSILE FABRIC
18. 8" METAL WALL FRAMING, SEE STRUCTURAL
19. 6" METAL WALL FRAMING, SEE STRUCTURAL
20. 14" STEEL C–JOIST ROOF FRAMING, SEE STRUCTURAL
21. 5/8" GYPSUM BOARD, PAINT FINISH
22. R–38 FIBERGLASS BATT INSULATION, WITH WHITE VINYL FACING IN EXPOSED AREAS
23. SUSPENDED ACOUSTICAL TILE CEILING, SEE REFLECTED CEILING PLAN SHEET A111
24. 80 MIL THICKNESS TPO MEMBRANE LINED INTERNAL GUTTER, SLOPE 1/4"/FT MIN TO DOWNSPOUT
25. 4" METAL WALL FRAMING
26. STEEL BEAM, SEE STRUCTURAL
27. THREE–COAT CEMENTITIOUS STUCCO FINISH, OVER 17 GA. REINFORCEMENT MESH, OVER WRB MEMBRANE, OVER 5/8" EXTERIOR RATED GYPSUM BOARD
28. ALUMINUM CURTAIN WALL SYSTEM
29. CORNER GUARD, TYP. ON OUTSIDE CORNERS

SIMMS TOWER STUDIO 850
400 GOLD AVENUE SW
ALBUQUERQUE, NEW MEXICO 87102
TEL 505.243.8100

G. DONALD DUDLEY AIA
ARCHITECT
ARCHITECTURE • INTERIORS • PLANNING
AIA • NCARB • LEED AP

STATE OF NEW MEXICO
G. DONALD DUDLEY, JR.
No. 3673
4/13/2020
REGISTERED ARCHITECT

NEW BUILDING FOR:
RIO RANCHO SENIOR CENTER
CITY OF RIO RANCHO
NEW MEXICO

MARK	DATE	DESCRIPTION

GDDA PROJECT NO: 18–137
DATE: 4/13/2020
DRAWN BY: gdd/pb
CHECKED BY: gdd/pb
SET NO:
SHEET TITLE: BUILDING SECTIONS ADD ALTERNATE #1

A303

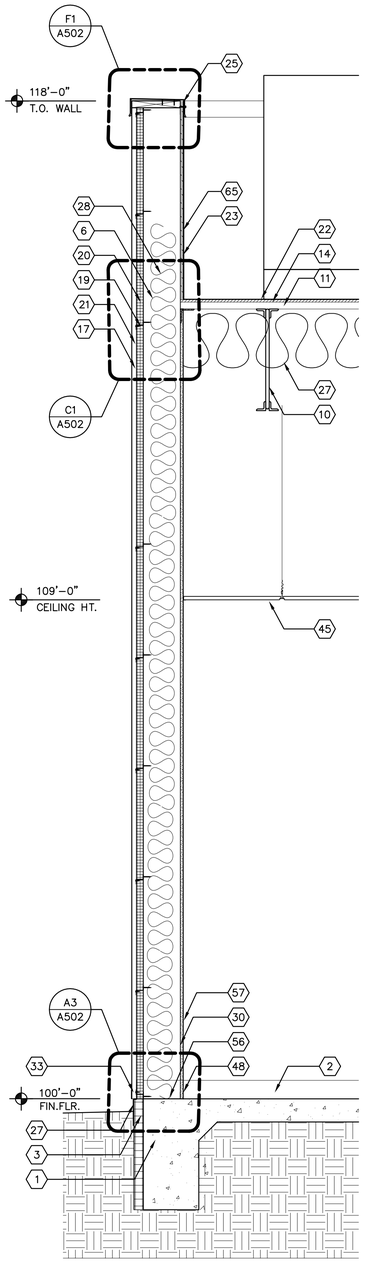

A1 WALL SECTION
3/4"=1'-0"

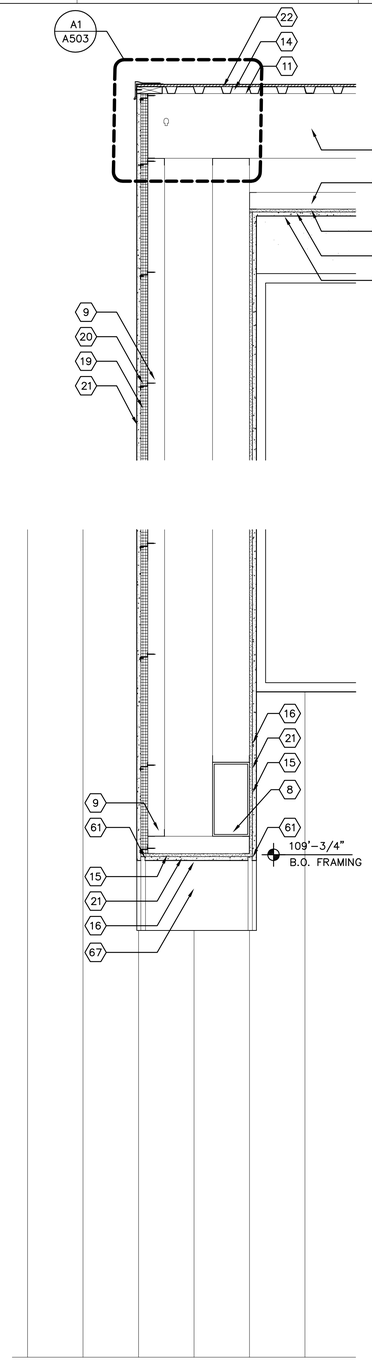

A3 WALL SECTION
3/4"=1'-0"

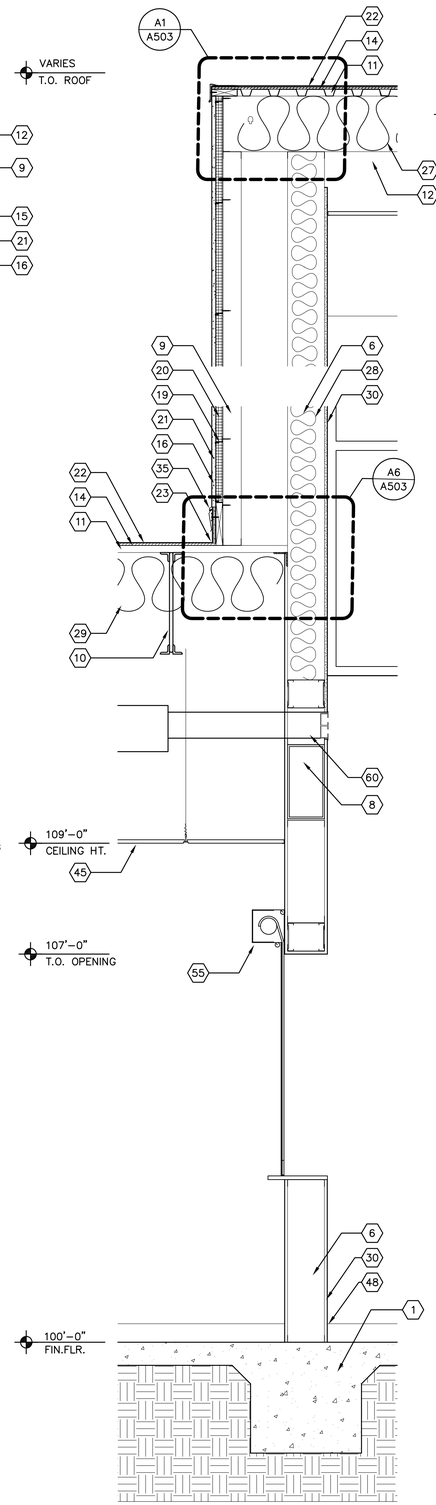

A5 WALL SECTION
3/4"=1'-0"

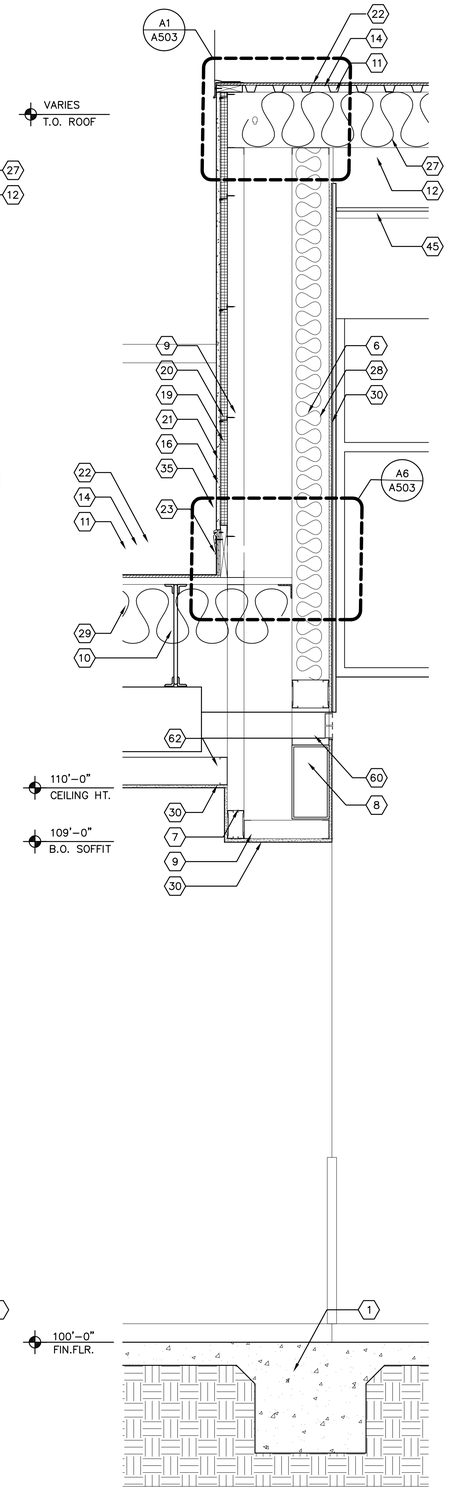

A7 WALL SECTION
3/4"=1'-0"

GENERAL SHEET NOTES

A. DO NOT SCALE DRAWINGS.
B. CONTRACTOR TO COORDINATE ALL DRAWINGS PRIOR TO CONSTRUCTION.
C. VERIFY EXISTING CONDITIONS IN FIELD. BRING DISCREPANCIES TO ATTENTION OF ARCHITECT.
D. DIMENSIONS ARE TO STUDS UNLESS OTHERWISE NOTED. 'FF' INDICATES THAT THE DIMENSION IS A CRITICAL FINISHED DIMENSION MEASURED TO THE FINISHED FACE OF PARTITIONS.
E. SEE SHEET A501 FOR PARTITION / WALL TYPES.
F. EXIT LIGHTS AND REMOTE INDICATOR LIGHTS LOCATED OVER DOORS SHALL BE CENTERED ON DOOR OPENING U.O.N.
G. EXIT LIGHTS AT CORRIDORS SHALL BE CENTERED U.O.N. AT SOFFITS AND CEILINGS, COORDINATE LIGHTING FIXTURE LOCATIONS WITH MECHANICAL WORK.

SHEET KEYNOTES (#)

1. CONCRETE FOOTING, SEE STRUCTURAL
2. 5" CONCRETE SLAB ON GRADE WITH SLICK TROWEL FINISH
3. 2" (R-10 MIN.) RIGID PERIMETER INSULATION, 24" DEEP
4. CONCRETE SIDEWALK, SEE CIVIL
5. 1/2" EXPANSION JOINT MATERIAL AND SEALER
6. 8" METAL WALL FRAMING, SEE STRUCTURAL
7. DOOR/WINDOW LINTEL, SEE STRUCTURAL
8. STEEL BEAM, SEE STRUCTURAL
9. 4" METAL FRAMING
10. OPEN WEB STEEL JOIST, SEE STRUCTURAL
11. METAL ROOF DECK, SEE STRUCTURAL
12. 12" METAL JOISTS, SEE STRUCTURAL
13. STEEL ANGLE, SEE STRUCTURAL
14. 1/2" ROOFING COVER BOARD
15. 5/8" EXTERIOR GYPSUM BOARD PANEL
16. 3-COAT CEMENTITIOUS STUCCO FINISH WITH 17 GA. GALVANIZED WOVEN WIRE MESH REINFORCEMENT.
17. METAL WALL PANELS
18. NOT USED
19. 'Z' FORMED METAL @ 24" O.C. HORIZONTAL
20. 1.5" POLY-ISOCYANURATE INSULATION BOARD
21. VAPOR BARRIER
22. 80 MIL TPO ROOF MEMBRANE
23. 80 MIL TPO WALL FLASHING
24. TAPERED POLYISOCYANURATE INSULATION
25. PRE-FINISHED METAL PARAPET COPING, SLOPE TO INTERIOR
26. PRE-FINISHED METAL DRIP EDGE FLASHING, TO MATCH WALL PANEL
27. R-38 FIRE RATED FOIL-FACED FIBERGLASS BATT INSULATION
28. R-19 KRAFT-FACED FIBERGLASS BATT INSULATION
29. NOT USED
30. 5/8' GYPSUM BOARD, PAINT FINISH,
31. ALUMINUM STOREFRONT WINDOW/DOOR UNIT, SEE WINDOW SCHEDULE.
32. PRE-FINISHED ROOF LEADER AND DOWNSPOUT
33. PRE-FINISHED METAL TRIM PER METAL PANEL MANUFACTURER'S RECOMMENDATION
34. STUCCO DRIP EDGE WITH WEEPS
35. STUCCO TERMINATION WITH SPRING-LOCK ROOF MEMBRANE FLASHING
36. SEALANT AND BACKER ROD
37. NOT USED
38. EXPANDING CONTINUOUS FOAM SEALANT, FILL AS REQUIRED
39. FOAM CLOSURE STRIP WITH ADHESIVE TAPE, PER METAL PANEL MANUFACTURER'S RECOMMENDATION.
40. ADA-COMPLIANT ALUMINUM DOOR SILL
41. 1-1/2" SOLID FIRE-TREATED WOOD BLOCKING
42. 3/4" FIRE-TREATED WOOD BLOCKING
43. SOLID FIRE-TREATED WOOD BLOCKING, AS REQUIRED
44. SHIM, AS REQUIRED
45. ACOUSTICAL TILE CEILING, SEE REFLECTED CEILING PLAN
46. NOT USED
47. HOLLOW METAL FRAME AND DOOR, SEE SCHEDULE
48. 4" RUBBER OR VINYL BASE, SEE FINISH SCHEDULE
49. NOT USED
50. NOT USED
51. NOT USED
52. NOT USED
53. NOT USED
54. SEALANT TO MATCH ADJACENT WALL COLOR
55. COILING SERVICE DOOR, SEE SCHEDULE
56. 8" WIDE FOAM SILL SEALANT
57. FRP PANEL, SEE FINISH SCHEDULE
58. BRAKE METAL FLASHING TO MATCH WALL COLOR
59. NOT USED
60. MECHANICAL DUCT/DIFFUSER, SEE MECHANICAL
61. NOT USED
62. 6" METAL FRAMING AT 16" O.C.
63. ACOUSTIC BATT INSULATION
64. NOT USED
65. 1/2" FIRE-TREATED EXTERIOR RATED PLYWOOD

G. DONALD DUDLEY AIA
ARCHITECT
ARCHITECTURE • INTERIORS • PLANNING
AIA • NCARB • LEED AP
SIMMS TOWER STUDIO 850
400 GOLD AVENUE SW
ALBUQUERQUE, NEW MEXICO
87102
TEL 505.243.8100

STATE OF NEW MEXICO
G. DONALD DUDLEY, JR.
No. 3673
4/13/2020
REGISTERED ARCHITECT

NEW BUILDING FOR:
RIO RANCHO SENIOR CENTER
CITY OF RIO RANCHO
NEW MEXICO

MARK	DATE	DESCRIPTION

GDDA PROJECT NO: 18-137
DATE: 4/13/2020
DRAWN BY: gdd/pb
CHECKED BY: gdd/pb
SET NO:
SHEET TITLE: WALL SECTIONS

A310

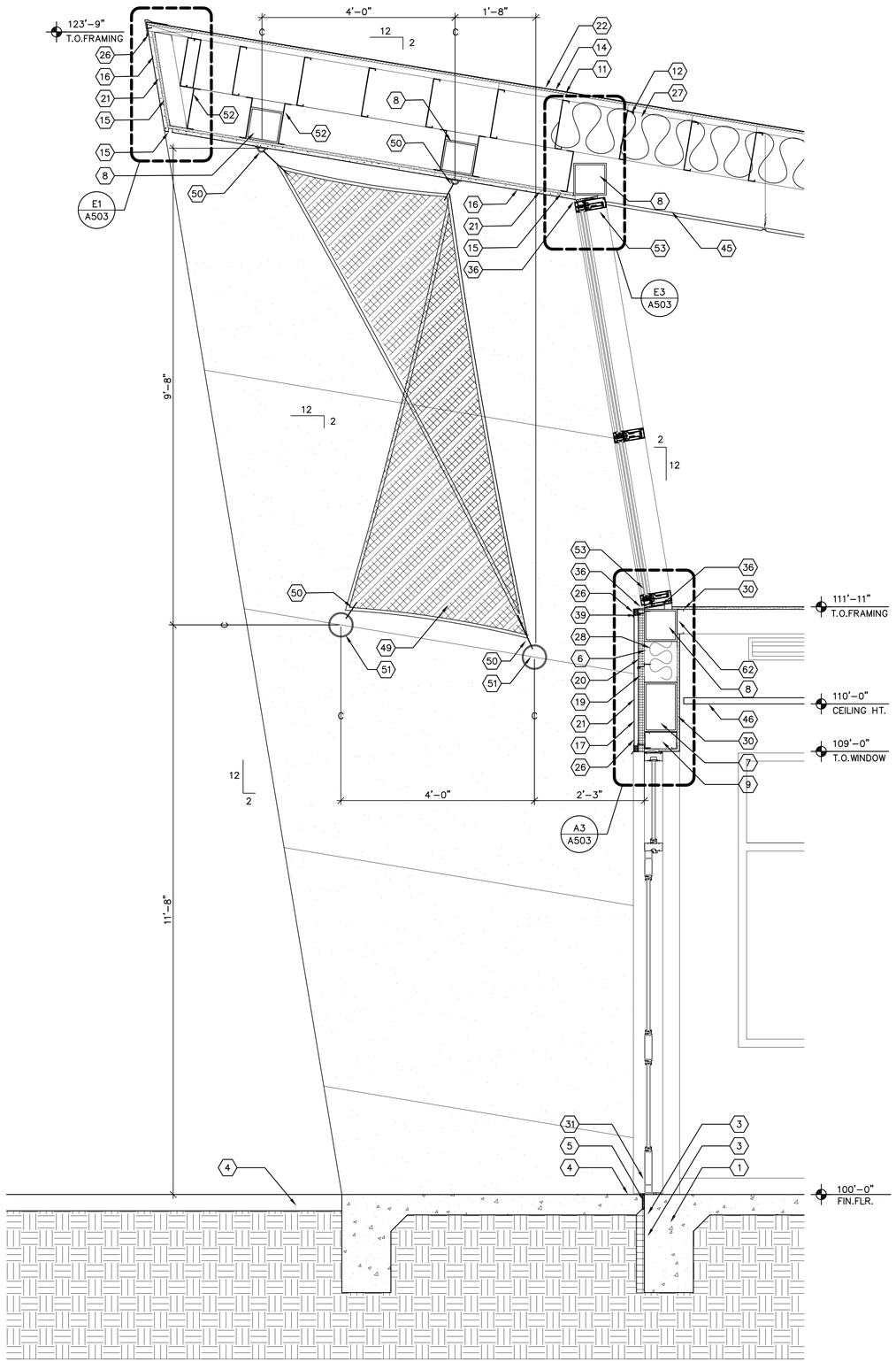

A3 WALL SECTION
3/4"=1'-0"

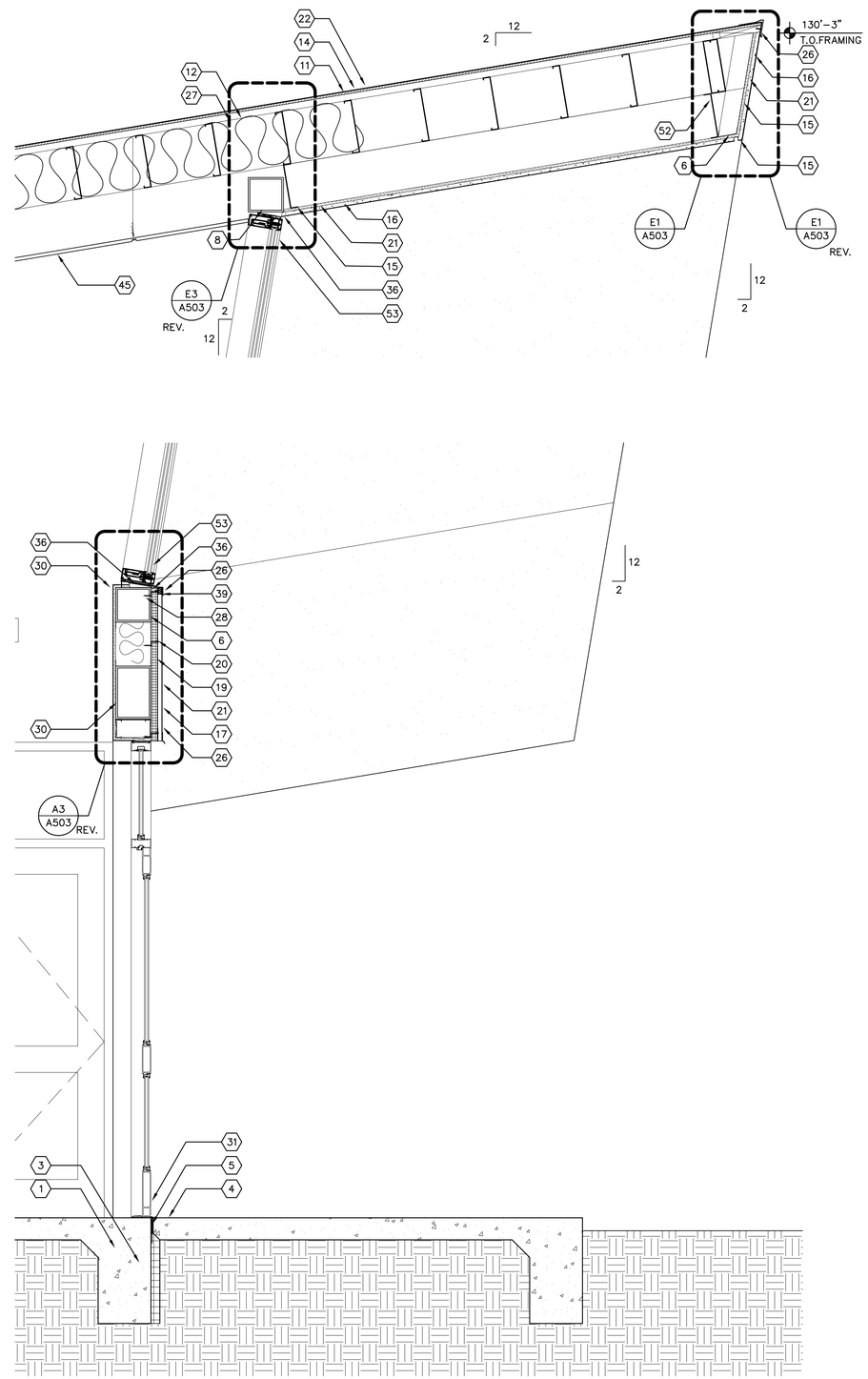

A5 WALL SECTION
3/4"=1'-0"

GENERAL SHEET NOTES

A. DO NOT SCALE DRAWINGS.
B. CONTRACTOR TO COORDINATE ALL DRAWINGS PRIOR TO CONSTRUCTION.
C. VERIFY EXISTING CONDITIONS IN FIELD. BRING DISCREPANCIES TO ATTENTION OF ARCHITECT.
D. DIMENSIONS ARE TO STUDS UNLESS OTHERWISE NOTED. 'FF' INDICATES THAT THE DIMENSION IS A CRITICAL FINISHED DIMENSION MEASURED TO THE FINISHED FACE OF PARTITIONS.
E. SEE SHEET A501 FOR PARTITION / WALL TYPES.
F. EXIT LIGHTS AND REMOTE INDICATOR LIGHTS LOCATED OVER DOORS SHALL BE CENTERED ON DOOR OPENING U.O.N.
G. EXIT LIGHTS AT CORRIDORS SHALL BE CENTERED U.O.N. AT SOFFITS AND CEILINGS, COORDINATE LIGHTING FIXTURE LOCATIONS WITH MECHANICAL WORK.

SHEET KEYNOTES

1. CONCRETE FOOTING, SEE STRUCTURAL
2. 5" CONCRETE SLAB ON GRADE WITH SLICK TROWEL FINISH
3. 2" (R-10 MIN.) RIGID PERIMETER INSULATION, 24" DEEP
4. CONCRETE SIDEWALK, SEE CIVIL
5. 1/2" EXPANSION JOINT MATERIAL AND SEALER
6. 8" METAL WALL FRAMING, SEE STRUCTURAL
7. DOOR/WINDOW LINTEL, SEE STRUCTURAL
8. STEEL BEAM, SEE STRUCTURAL
9. 4" METAL FRAMING
10. NOT USED
11. METAL ROOF DECK, SEE STRUCTURAL
12. ROOF JOISTS, SEE STRUCTURAL
13. NOT USED
14. ROOF COVER BOARD
15. 5/8" EXTERIOR GYPSUM BOARD PANEL
16. 3-COAT CEMENTITIOUS STUCCO FINISH WITH 17 GA. GALVANIZED WOVEN WIRE MESH REINFORCEMENT.
17. METAL WALL PANEL
18. NOT USED
19. 'Z' FORMED METAL @ 24" O.C. HORIZONTAL
20. 1.5" POLY-ISOCYANURATE INSULATION BOARD
21. VAPOR BARRIER
22. 80 MIL TPO ROOF MEMBRANE
23. NOT USED
24. TAPERED POLYISOCYANURATE INSULATION
25. NOT USED
26. PRE-FINISHED METAL DRIP EDGE FLASHING, TO MATCH WALL PANEL
27. R-38 FIRE RATED FOIL-FACED FIBERGLASS BATT INSULATION
28. R-19 KRAFT-FACED FIBERGLASS BATT INSULATION
29. R-38 WHITE VINYL-FACED FIBERGLASS BATT INSULATION
30. 5/8' GYPSUM BOARD, PAINT FINISH,
31. ALUMINUM STOREFRONT WINDOW/DOOR UNIT, SEE WINDOW SCHEDULE.
32. NOT USED
33. PRE-FINISHED METAL TRIM PER METAL PANEL MANUFACTURER'S RECOMMENDATION
34. STUCCO DRIP EDGE WITH WEEPS
35. STUCCO TERMINATION WITH SPRING-LOCK ROOF MEMBRANE FLASHING
36. SEALANT AND BACKER ROD
37. SLOPED SUB-SILL
38. EXPANDING CONTINUOUS FOAM SEALANT, FILL AS REQUIRED
39. FOAM CLOSURE STRIP WITH ADHESIVE TAPE, PER METAL PANEL MANUFACTURER'S RECOMMENDATION.
40. ADA-COMPLIANT ALUMINUM DOOR SILL
41. 1-1/2" SOLID FIRE-TREATED WOOD BLOCKING
42. 3/4" FIRE-TREATED WOOD BLOCKING
43. SOLID FIRE-TREATED WOOD BLOCKING, AS REQUIRED
44. SHIM, AS REQUIRED
45. ACOUSTICAL TILE CEILING, SEE REFLECTED CEILING PLAN
46. ACOUSTICAL CLOUD PANEL, SEE REFLECTED CEILING PLAN
47. NOT USED
48. NOT USED
49. FABRIC SHADE SAIL, ALL HARDWARE AND CONNECTIONS TO BE PROVIDED AND ENGINEERED BY SHADE SAIL MANUFACTURER. FIELD VERIFY SHADE SAIL DIMENSION
50. STAINLESS STEEL HARDWARE. ALL HARDWARE TO BE PROVIDED AND ENGINEERED BY SHADE SAIL MANUFACTURER
51. 6" STEEL PIPE, SEE STRUCTURAL
52. 10" STEEL CHANNEL FRAMING
53. ALUMINUM CURTAIN WALL SYSTEM, SEE WINDOW TYPES AND SPECIFICATIONS
54. SEALANT TO MATCH ADJACENT WALL COLOR
55. NOT USED
56. NOT USED
57. NOT USED
58. NOT USED
59. NOT USED
60. NOT USED
61. 7/8" STUCCO DRIP SCREED
62. 6" METAL FRAMING @ 16" O.C.

SIMMS TOWER STUDIO 850
400 GOLD AVENUE SW
ALBUQUERQUE, NEW MEXICO 87102
TEL 505.243.8100

G. DONALD DUDLEY AIA
ARCHITECT
ARCHITECTURE • INTERIORS • PLANNING
AIA • NCARB • LEED AP

STATE OF NEW MEXICO
G. DONALD DUDLEY, JR.
No. 3673
4/13/2020
REGISTERED ARCHITECT

NEW BUILDING FOR:
RIO RANCHO SENIOR CENTER
CITY OF RIO RANCHO
NEW MEXICO

MARK	DATE	DESCRIPTION

GDDA PROJECT NO: 18-137
DATE: 4/13/2020
DRAWN BY: gdd/pb
CHECKED BY: gdd/pb
SET NO:
SHEET TITLE: WALL SECTIONS

A311

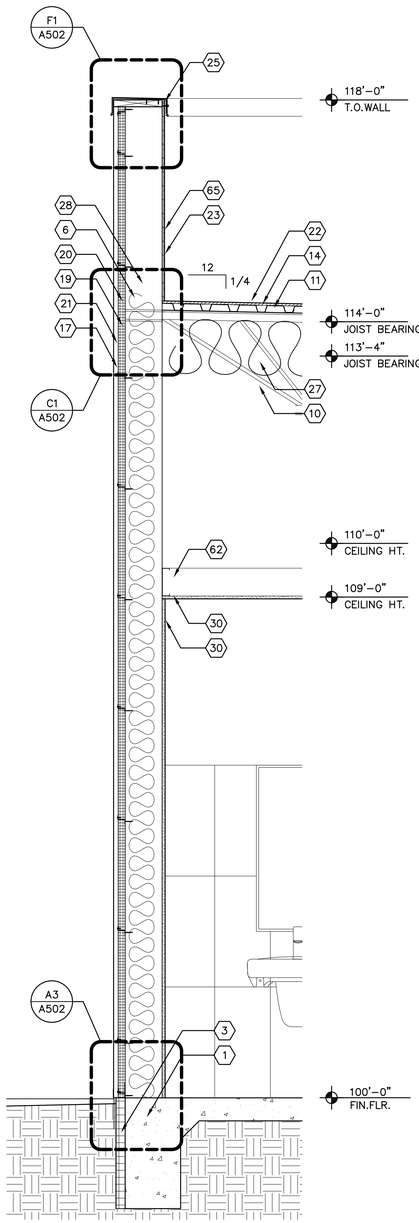

A1 WALL SECTION
3/4"=1'-0"

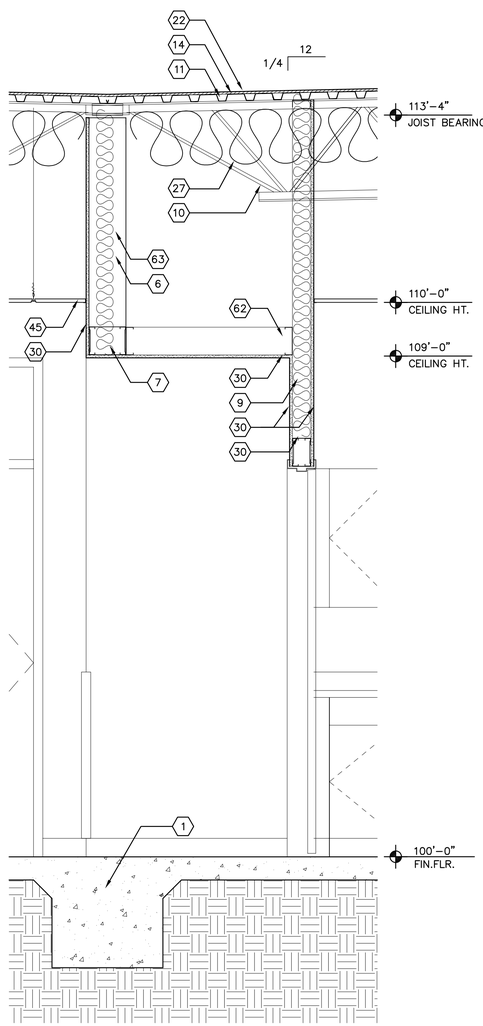

A3 WALL SECTION
3/4"=1'-0"

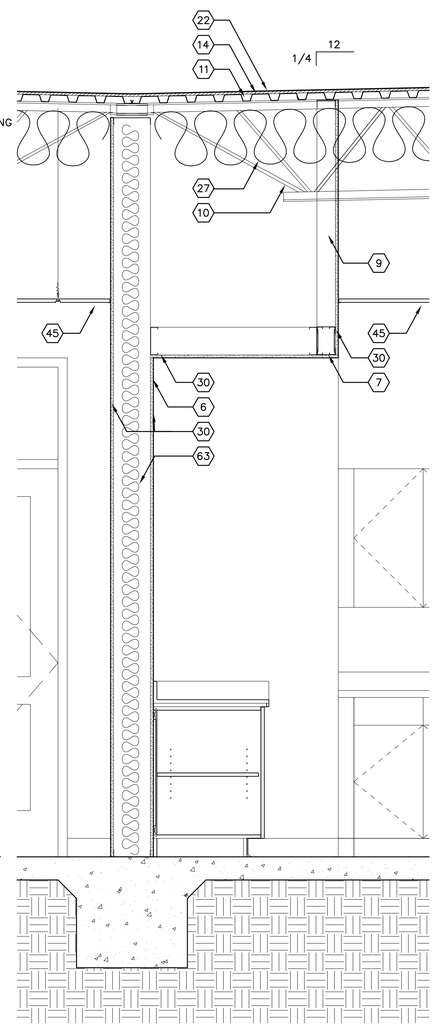

A5 WALL SECTION
3/4"=1'-0"

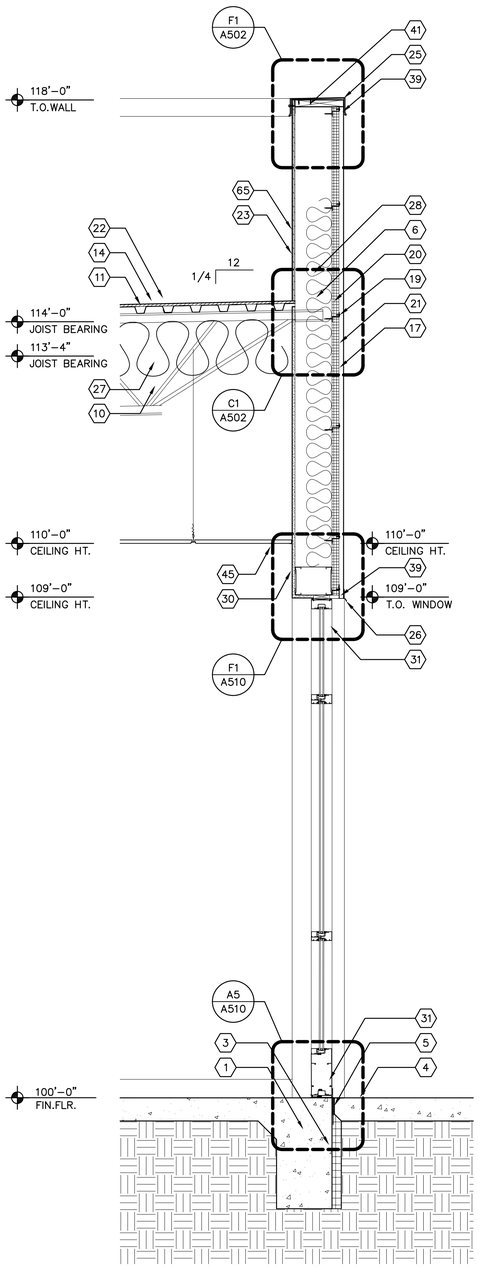

A7 WALL SECTION
3/4"=1'-0"

GENERAL SHEET NOTES

A. DO NOT SCALE DRAWINGS.
B. CONTRACTOR TO COORDINATE ALL DRAWINGS PRIOR TO CONSTRUCTION.
C. VERIFY EXISTING CONDITIONS IN FIELD. BRING DISCREPANCIES TO ATTENTION OF ARCHITECT.
D. DIMENSIONS ARE TO STUDS UNLESS OTHERWISE NOTED. 'FF' INDICATES THAT THE DIMENSION IS A CRITICAL FINISHED DIMENSION MEASURED TO THE FINISHED FACE OF PARTITIONS.
E. SEE SHEET A501 FOR PARTITION / WALL TYPES.
F. EXIT LIGHTS AND REMOTE INDICATOR LIGHTS LOCATED OVER DOORS SHALL BE CENTERED ON DOOR OPENING U.O.N.
G. EXIT LIGHTS AT CORRIDORS SHALL BE CENTERED U.O.N. AT SOFFITS AND CEILINGS, COORDINATE LIGHTING FIXTURE LOCATIONS WITH MECHANICAL WORK.

SHEET KEYNOTES

1. CONCRETE FOOTING, SEE STRUCTURAL
2. 5" CONCRETE SLAB ON GRADE WITH SLICK TROWEL FINISH
3. 2" (R-10 MIN.) RIGID PERIMETER INSULATION, 24" DEEP
4. CONCRETE SIDEWALK, SEE CIVIL
5. 1/2" EXPANSION JOINT MATERIAL AND SEALER
6. 8" METAL WALL FRAMING, SEE STRUCTURAL
7. DOOR/WINDOW LINTEL, SEE STRUCTURAL
8. STEEL BEAM, SEE STRUCTURAL
9. 4" METAL FRAMING
10. OPEN WEB STEEL JOIST, SEE STRUCTURAL
11. METAL ROOF DECK, SEE STRUCTURAL
12. 12" METAL JOISTS, SEE STRUCTURAL
13. STEEL ANGLE, SEE STRUCTURAL
14. 1/2" ROOF COVE BOARD
15. 5/8" EXTERIOR GYPSUM BOARD PANEL
16. 3-COAT CEMENTITIOUS STUCCO FINISH WITH 17 GA. GALVANIZED WOVEN WIRE MESH REINFORCEMENT.
17. METAL WALL PANEL
18. NOT USED
19. 'Z' FORMED METAL @ 24" O.C. HORIZONTAL
20. 1.5" POLY-ISOCYANURATE INSULATION BOARD
21. VAPOR BARRIER
22. 80 MIL TPO ROOF MEMBRANE
23. 80 MIL TPO WALL FLASHING
24. TAPERED POLYISOCYANURATE INSULATION
25. PRE-FINISHED METAL PARAPET COPING, SLOPE TO INTERIOR
26. PRE-FINISHED METAL DRIP EDGE FLASHING, TO MATCH WALL PANEL
27. R-38 FIRE RATED FOIL-FACED FIBERGLASS BATT INSULATION
28. R-19 KRAFT-FACED FIBERGLASS BATT INSULATION
29. NOT USED
30. 5/8' GYPSUM BOARD, PAINT FINISH
31. ALUMINUM STOREFRONT WINDOW/DOOR UNIT, SEE WINDOW SCHEDULE.
32. NOT USED
33. PRE-FINISHED METAL TRIM PER METAL PANEL MANUFACTURER'S RECOMMENDATION
34. STUCCO DRIP EDGE WITH WEEPS
35. STUCCO TERMINATION WITH SPRING-LOCK ROOF MEMBRANE FLASHING
36. SEALANT AND BACKER ROD
37. SLOPED SUB-SILL
38. EXPANDING CONTINUOUS FOAM SEALANT, FILL AS REQUIRED
39. FOAM CLOSURE STRIP WITH ADHESIVE TAPE, PER METAL PANEL MANUFACTURER'S RECOMMENDATION.
40. ADA-COMPLIANT ALUMINUM DOOR SILL
41. 1-1/2" SOLID FIRE-TREATED WOOD BLOCKING
42. 3/4" FIRE-TREATED WOOD BLOCKING
43. SOLID FIRE-TREATED WOOD BLOCKING, AS REQUIRED
44. SHIM, AS REQUIRED
45. ACOUSTICAL TILE CEILING, SEE REFLECTED CEILING PLAN
46. NOT USED
47. HOLLOW METAL FRAME AND DOOR, SEE SCHEDULE
48. 4" RUBBER OR VINYL BASE, SEE FINISH SCHEDULE
49. NOT USED
50. NOT USED
51. NOT USED
52. NOT USED
53. NOT USED
54. SEALANT TO MATCH ADJACENT WALL COLOR
55. NOT USED
56. 8" WIDE FOAM SILL SEALANT
57. NOT USED
58. BRAKE METAL FLASHING TO MATCH WALL COLOR
59. NOT USED
60. NOT USED
61. NOT USED
62. 6" METAL FRAMING @ 16" O.C.
63. ACOUSTIC BATT INSULATION
64. NOT USED
65. 1/2" FIRE-TREATED EXTERIOR RATED PLYWOOD

SIMMS TOWER STUDIO 850
400 GOLD AVENUE SW
ALBUQUERQUE, NEW MEXICO
87102
TEL 505.243.8100

G. DONALD DUDLEY AIA
ARCHITECT
ARCHITECTURE • INTERIORS • PLANNING
AIA • NCARB • LEED AP

STATE OF NEW MEXICO
G. DONALD DUDLEY, JR.
No. 3673
4/13/2020
REGISTERED ARCHITECT

NEW BUILDING FOR:

RIO RANCHO
SENIOR CENTER

CITY OF RIO RANCHO
NEW MEXICO

MARK	DATE	DESCRIPTION

GDDA PROJECT NO: 18-137

DATE: 4/13/2020

DRAWN BY: gdd/pb

CHECKED BY: gdd/pb

SET NO:

SHEET TITLE: WALL SECTIONS

A312

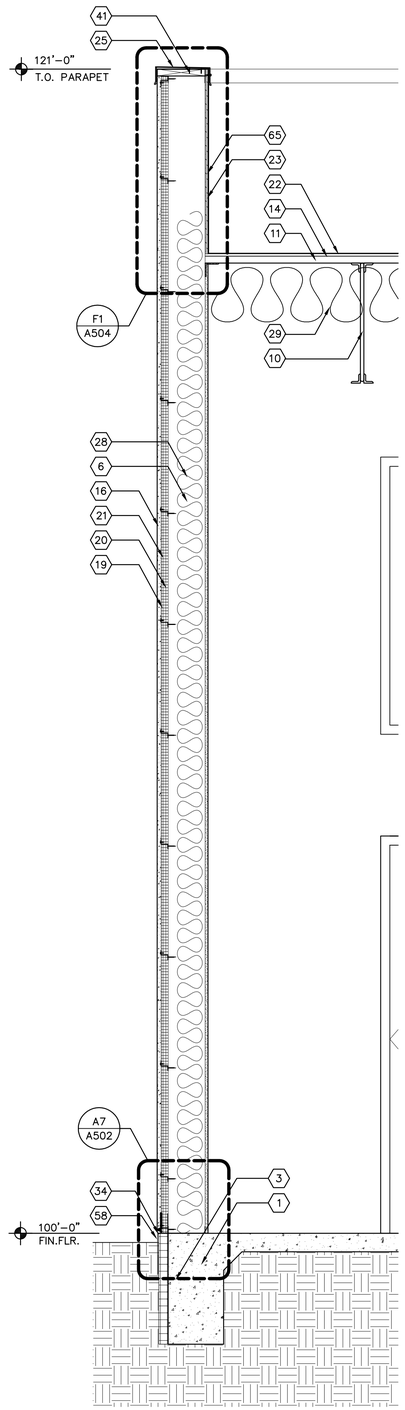

A3 WALL SECTION
3/4"=1'-0"

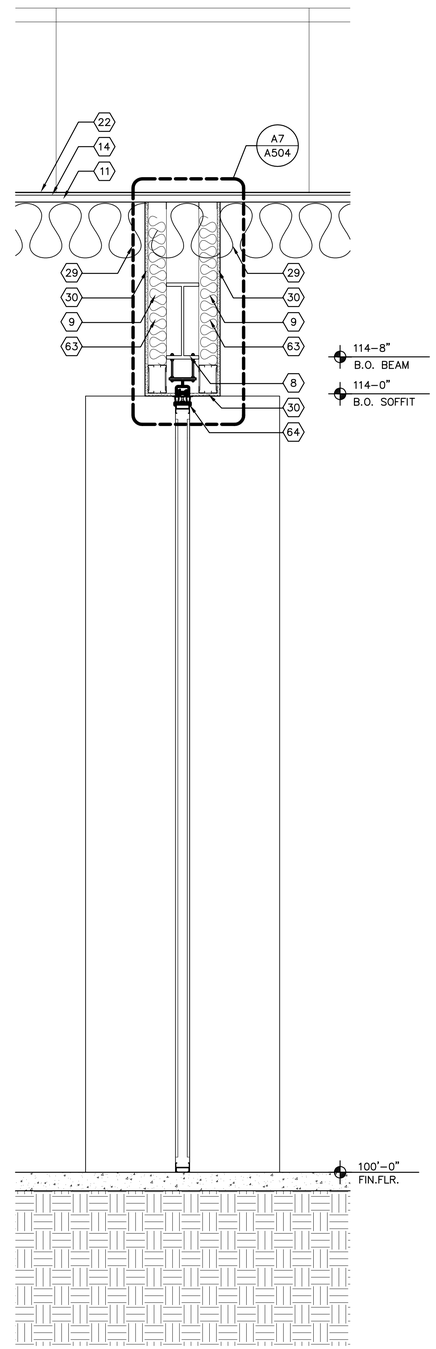

A5 WALL SECTION
3/4"=1'-0"

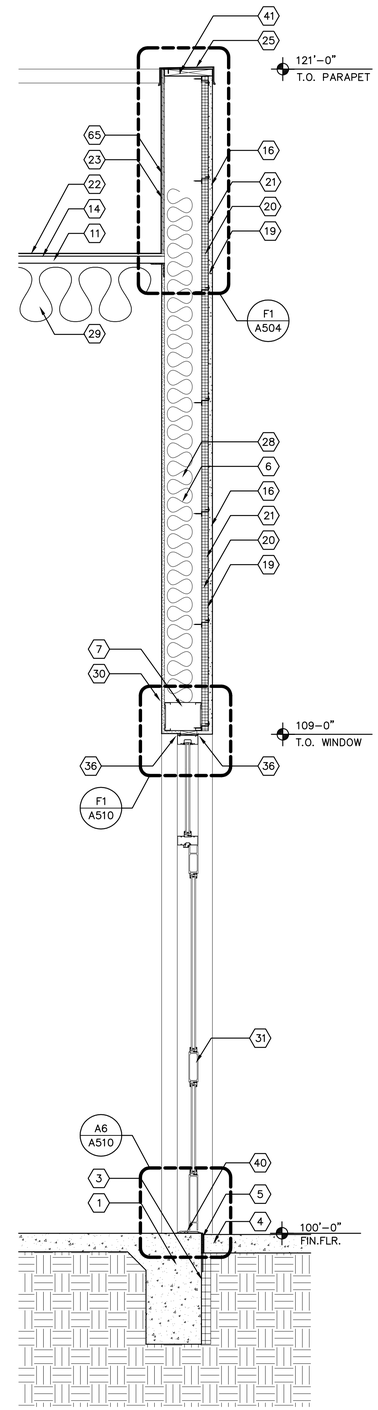

A7 WALL SECTION
3/4"=1'-0"

GENERAL SHEET NOTES

A. DO NOT SCALE DRAWINGS.
B. CONTRACTOR TO COORDINATE ALL DRAWINGS PRIOR TO CONSTRUCTION.
C. VERIFY EXISTING CONDITIONS IN FIELD. BRING DISCREPANCIES TO ATTENTION OF ARCHITECT.
D. DIMENSIONS ARE TO STUDS UNLESS OTHERWISE NOTED. 'FF' INDICATES THAT THE DIMENSION IS A CRITICAL FINISHED DIMENSION MEASURED TO THE FINISHED FACE OF PARTITIONS.
E. SEE SHEET A501 FOR PARTITION / WALL TYPES.
F. EXIT LIGHTS AND REMOTE INDICATOR LIGHTS LOCATED OVER DOORS SHALL BE CENTERED ON DOOR OPENING U.O.N.
G. EXIT LIGHTS AT CORRIDORS SHALL BE CENTERED U.O.N. AT SOFFITS AND CEILINGS, COORDINATE LIGHTING FIXTURE LOCATIONS WITH MECHANICAL WORK.

SHEET KEYNOTES

1. CONCRETE FOOTING, SEE STRUCTURAL
2. 5" CONCRETE SLAB ON GRADE WITH SLICK TROWEL FINISH
3. 2" (R-10 MIN.) RIGID PERIMETER INSULATION, 24" DEEP
4. CONCRETE SIDEWALK, SEE CIVIL
5. 1/2" EXPANSION JOINT MATERIAL AND SEALER
6. 8" METAL WALL FRAMING, SEE STRUCTURAL
7. DOOR/WINDOW LINTEL, SEE STRUCTURAL
8. STEEL BEAM, SEE STRUCTURAL
9. 4" METAL FRAMING
10. OPEN WEB STEEL JOIST, SEE STRUCTURAL
11. METAL ROOF DECK, SEE STRUCTURAL
12. 12" METAL JOISTS, SEE STRUCTURAL
13. STEEL ANGLE, SEE STRUCTURAL
14. 1/2" ROOF COVER BOARD
15. 5/8" EXTERIOR GYPSUM BOARD PANEL
16. 3-COAT CEMENTITIOUS STUCCO FINISH WITH 17 GA. GALVANIZED WOVEN WIRE MESH REINFORCEMENT.
17. METAL WALL PANEL
18. NOT USED
19. 'Z' FORMED METAL @ 24" O.C. HORIZONTAL
20. 1.5" POLY-ISOCYANURATE INSULATION BOARD
21. VAPOR BARRIER
22. 80 MIL TPO ROOF MEMBRANE
23. 80 MIL TPO WALL FLASHING
24. TAPERED POLYISOCYANURATE INSULATION
25. PRE-FINISHED METAL PARAPET COPING, SLOPE TO INTERIOR
26. NOT USED
27. NOT USED
28. R-19 KRAFT-FACED FIBERGLASS BATT INSULATION
29. R-38 WHITE VINYL-FACED FIBERGLASS BATT INSULATION
30. 5/8' GYPSUM BOARD, PAINT FINISH,
31. ALUMINUM STOREFRONT WINDOW/DOOR UNIT, SEE WINDOW SCHEDULE.
32. NOT USED
33. NOT USED
34. STUCCO DRIP EDGE WITH WEEPS
35. NOT USED
36. SEALANT AND BACKER ROD
37. NOT USED
38. EXPANDING CONTINUOUS FOAM SEALANT, FILL AS REQUIRED
39. NOT USED
40. ADA-COMPLIANT ALUMINUM DOOR SILL
41. 1-1/2" SOLID FIRE-TREATED WOOD BLOCKING
42. 3/4" FIRE-TREATED WOOD BLOCKING
43. SOLID FIRE-TREATED WOOD BLOCKING, AS REQUIRED
44. SHIM, AS REQUIRED
45. ACOUSTICAL TILE CEILING, SEE REFLECTED CEILING PLAN
46. NOT USED
47. HOLLOW METAL FRAME AND DOOR, SEE SCHEDULE
48. 4" RUBBER OR VINYL BASE, SEE FINISH SCHEDULE
49. NOT USED
50. NOT USED
51. NOT USED
52. NOT USED
53. NOT USED
54. SEALANT TO MATCH ADJACENT WALL COLOR
55. NOT USED
56. 8" WIDE FOAM SILL SEALANT
57. NOT USED
58. BRAKE METAL FLASHING TO MATCH WALL COLOR
59. NOT USED
60. MECHANICAL DUCT/DIFFUSER, SEE MECHANICAL
61. 7/8" STUCCO DRIP SCREED
62. NOT USED.
63. ACOUSTIC BATT INSULATION
64. FOLDING PARTITION TRACK AND HARDWARE
65. 1/2" FIRE-TREATED EXTERIOR RATED PLYWOOD

G. DONALD DUDLEY AIA
ARCHITECT
ARCHITECTURE • INTERIORS • PLANNING
AIA • NCARB • LEED AP
SIMMS TOWER STUDIO 850
400 GOLD AVENUE SW
ALBUQUERQUE, NEW MEXICO
87102
TEL 505.243.8100

STATE OF NEW MEXICO
G. DONALD DUDLEY, JR.
No. 3673
4/13/2020
REGISTERED ARCHITECT

NEW BUILDING FOR:
RIO RANCHO SENIOR CENTER
CITY OF RIO RANCHO NEW MEXICO

MARK	DATE	DESCRIPTION

GDDA PROJECT NO: 18-137
DATE: 4/13/2020
DRAWN BY: gdd/pb
CHECKED BY: gdd/pb
SET NO:
SHEET TITLE: WALL SECTIONS ADD ALTERNATE #1

A313

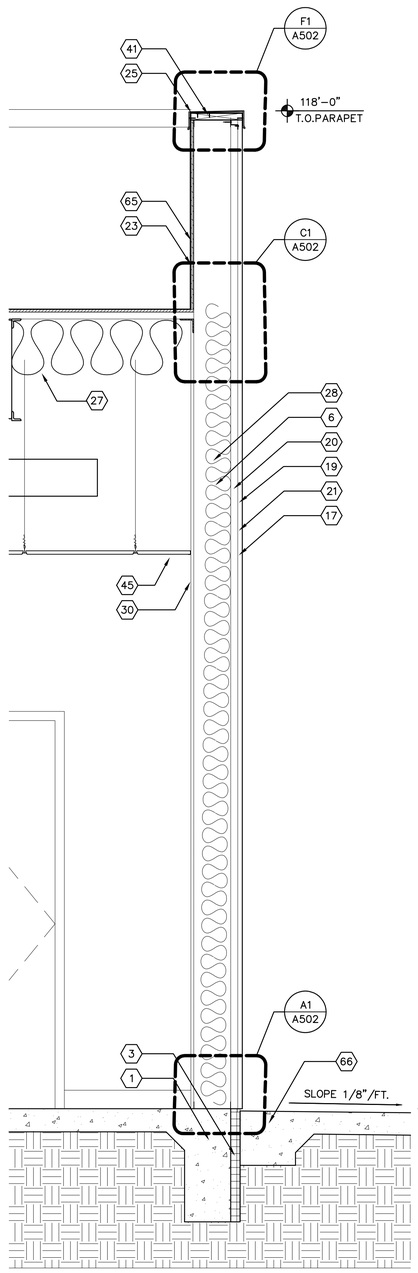

A1 WALL SECTION – BASE BID
3/4"=1'-0"

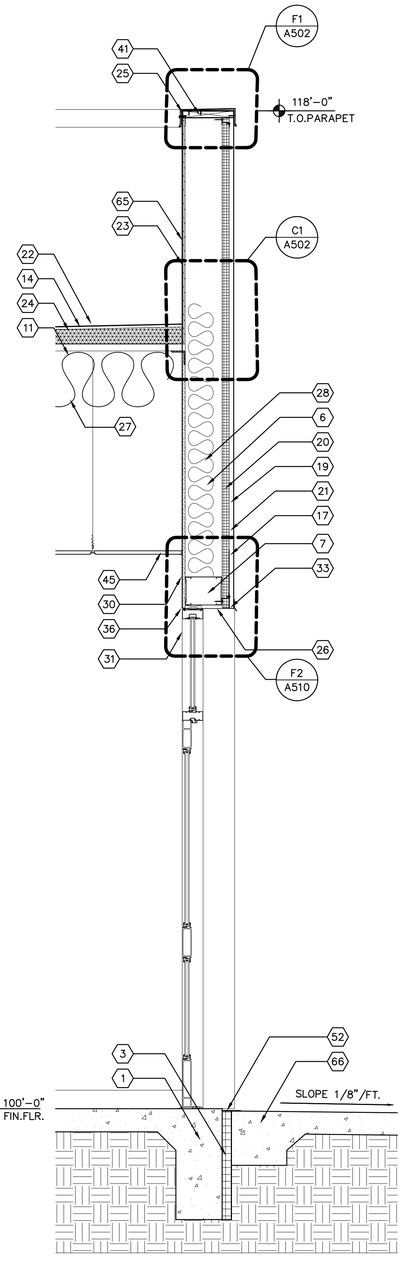

A3 WALL SECTION – BASE BID
3/4"=1'-0"

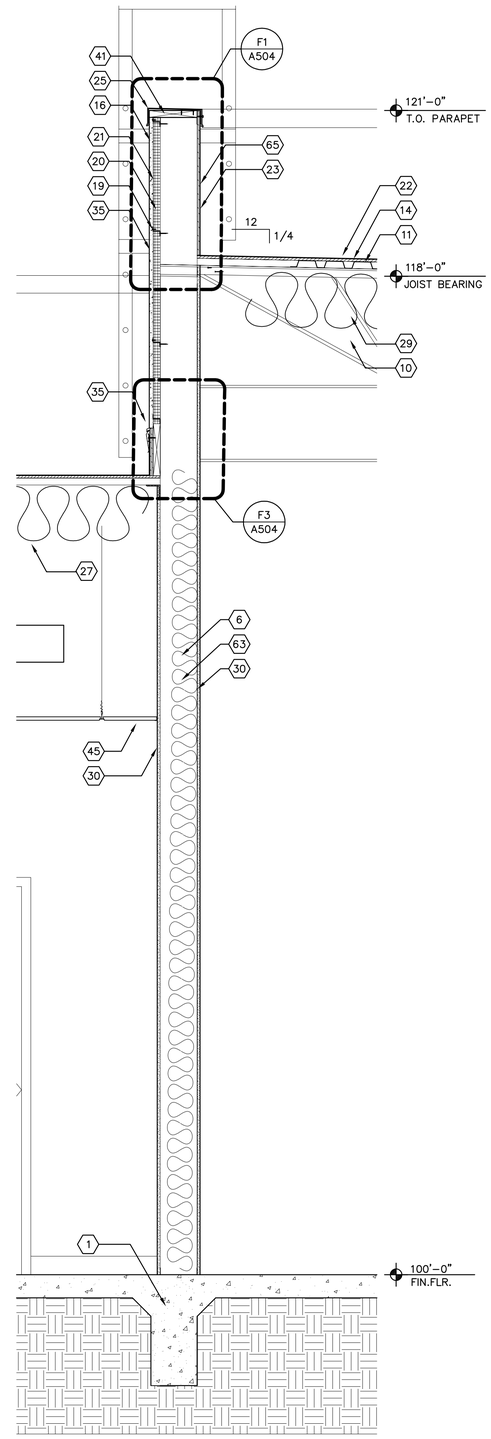

A5 WALL SECTION – ADD ALTERNATE #1
3/4"=1'-0"

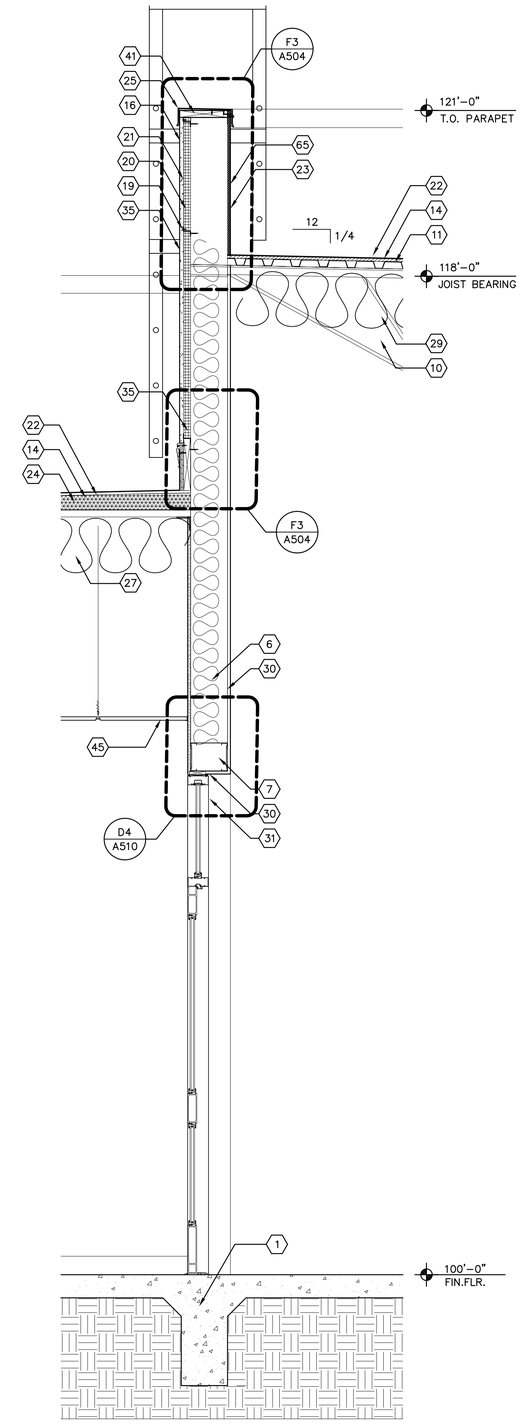

A7 WALL SECTION – ADD ALTERNATE #1
3/4"=1'-0"

GENERAL SHEET NOTES

A. DO NOT SCALE DRAWINGS.
B. CONTRACTOR TO COORDINATE ALL DRAWINGS PRIOR TO CONSTRUCTION.
C. VERIFY EXISTING CONDITIONS IN FIELD. BRING DISCREPANCIES TO ATTENTION OF ARCHITECT.
D. DIMENSIONS ARE TO STUDS UNLESS OTHERWISE NOTED. 'FF' INDICATES THAT THE DIMENSION IS A CRITICAL FINISHED DIMENSION MEASURED TO THE FINISHED FACE OF PARTITIONS.
E. SEE SHEET A501 FOR PARTITION / WALL TYPES.
F. EXIT LIGHTS AND REMOTE INDICATOR LIGHTS LOCATED OVER DOORS SHALL BE CENTERED ON DOOR OPENING U.O.N.
G. EXIT LIGHTS AT CORRIDORS SHALL BE CENTERED U.O.N. AT SOFFITS AND CEILINGS, COORDINATE LIGHTING FIXTURE LOCATIONS WITH MECHANICAL WORK.

SHEET KEYNOTES

1. CONCRETE FOOTING, SEE STRUCTURAL
2. 5" CONCRETE SLAB ON GRADE WITH SLICK TROWEL FINISH
3. 2" (R-10 MIN.) RIGID PERIMETER INSULATION, 24" DEEP
4. CONCRETE SIDEWALK, SEE CIVIL
5. 1/2" EXPANSION JOINT MATERIAL AND SEALER
6. 8" METAL WALL FRAMING, SEE STRUCTURAL
7. DOOR/WINDOW LINTEL, SEE STRUCTURAL
8. STEEL BEAM, SEE STRUCTURAL
9. 4" METAL FRAMING
10. OPEN WEB STEEL JOIST, SEE STRUCTURAL
11. METAL ROOF DECK, SEE STRUCTURAL
12. 12" METAL JOISTS, SEE STRUCTURAL
13. STEEL ANGLE, SEE STRUCTURAL
14. 1/2" GYPSUM-BASED ROOFING RECOVERY BOARD
15. 5/8" EXTERIOR GYPSUM BOARD PANEL
16. 3-COAT CEMENTITIOUS STUCCO FINISH WITH 17 GA. GALVANIZED WOVEN WIRE MESH REINFORCEMENT.
17. 12" WIDE X 1" DEEP PRE-FINISHED FLAT METAL WALL PANELS, 22 GA., 'CHARCOAL' COLOR
18. NOT USED
19. 'Z' FORMED METAL @ 24" O.C. HORIZONTAL
20. 1.5" POLY-ISOCYANURATE INSULATION BOARD
21. VAPOR BARRIER
22. 80 MIL TPO ROOF MEMBRANE
23. 80 MIL TPO WALL FLASHING
24. TAPERED POLYISOCYANURATE INSULATION
25. PRE-FINISHED METAL PARAPET COPING, SLOPE TO INTERIOR
26. PRE-FINISHED METAL DRIP EDGE FLASHING, TO MATCH WALL PANEL
27. R-38 FIRE RATED FOIL-FACED FIBERGLASS BATT INSULATION
28. R-19 KRAFT-FACED FIBERGLASS BATT INSULATION
29. R-38 WHITE VINYL-FACED FIBERGLASS BATT INSULATION
30. 5/8' GYPSUM BOARD, PAINT FINISH,
31. ALUMINUM STOREFRONT WINDOW/DOOR UNIT, SEE WINDOW SCHEDULE.
32. PRE-FINISHED ROOF LEADER AND DOWNSPOUT
33. PRE-FINISHED METAL TRIM PER METAL PANEL MANUFACTURER'S RECOMMENDATION
34. STUCCO DRIP EDGE WITH WEEPS
35. STUCCO TERMINATION WITH SPRING-LOCK ROOF MEMBRANE FLASHING
36. SEALANT AND BACKER ROD
37. NOT USED
38. NOT USED
39. FOAM CLOSURE STRIP WITH ADHESIVE TAPE, PER METAL PANEL MANUFACTURER'S RECOMMENDATION.
40. ADA-COMPLIANT ALUMINUM DOOR SILL
41. 1-1/2" SOLID FIRE-TREATED WOOD BLOCKING
42. 3/4" FIRE-TREATED WOOD BLOCKING
43. SOLID FIRE-TREATED WOOD BLOCKING, AS REQUIRED
44. SHIM, AS REQUIRED
45. ACOUSTICAL TILE CEILING, SEE REFLECTED CEILING PLAN
46. NOT USED
47. HOLLOW METAL FRAME AND DOOR, SEE SCHEDULE
48. 4" RUBBER OR VINYL BASE, SEE FINISH SCHEDULE
49. NOT USED
50. NOT USED
51. NOT USED
52. NOT USED
53. NOT USED
54. NOT USED
55. NOT USED
56. 8" WIDE FOAM SILL SEALANT
57. NOT USED
58. BRAKE METAL FLASHING TO MATCH WALL COLOR
59. NOT USED
60. NOT USED
61. NOT USED
62. NOT USED.
63. ACOUSTIC BATT INSULATION
64. NOT USED
65. 1/2" FIRE-TREATED EXTERIOR RATED PLYWOOD
66. 5" AIR-ENTRAINED CONCRETE SLAB, SEE STRUCTURAL

SIMMS TOWER STUDIO 850
400 GOLD AVENUE SW
ALBUQUERQUE, NEW MEXICO
87102
TEL 505.243.8100

G. DONALD DUDLEY AIA
ARCHITECT
ARCHITECTURE • INTERIORS • PLANNING
AIA • NCARB • LEED AP

STATE OF NEW MEXICO
G. DONALD DUDLEY, JR.
No. 3673
4/13/2020
REGISTERED ARCHITECT

NEW BUILDING FOR:
RIO RANCHO
SENIOR CENTER
CITY OF RIO RANCHO
NEW MEXICO

MARK	DATE	DESCRIPTION

GDDA PROJECT NO: 18-137
DATE: 4/13/2020
DRAWN BY: gdd/pb
CHECKED BY: gdd/pb
SET NO:
SHEET TITLE: WALL SECTIONS

A314

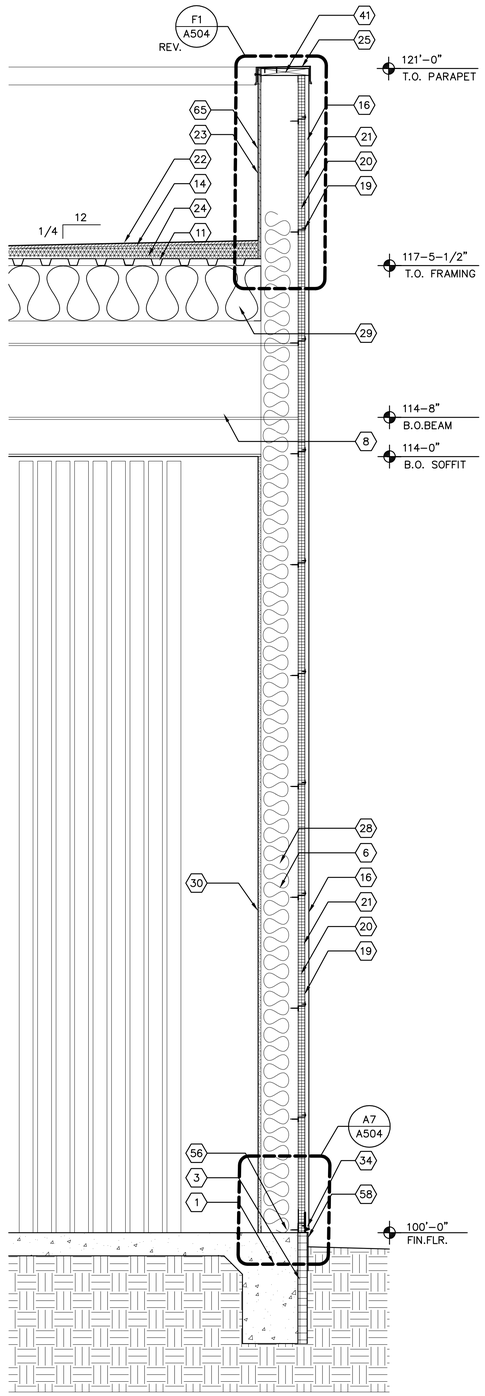

A3 WALL SECTION
3/4"=1'-0"

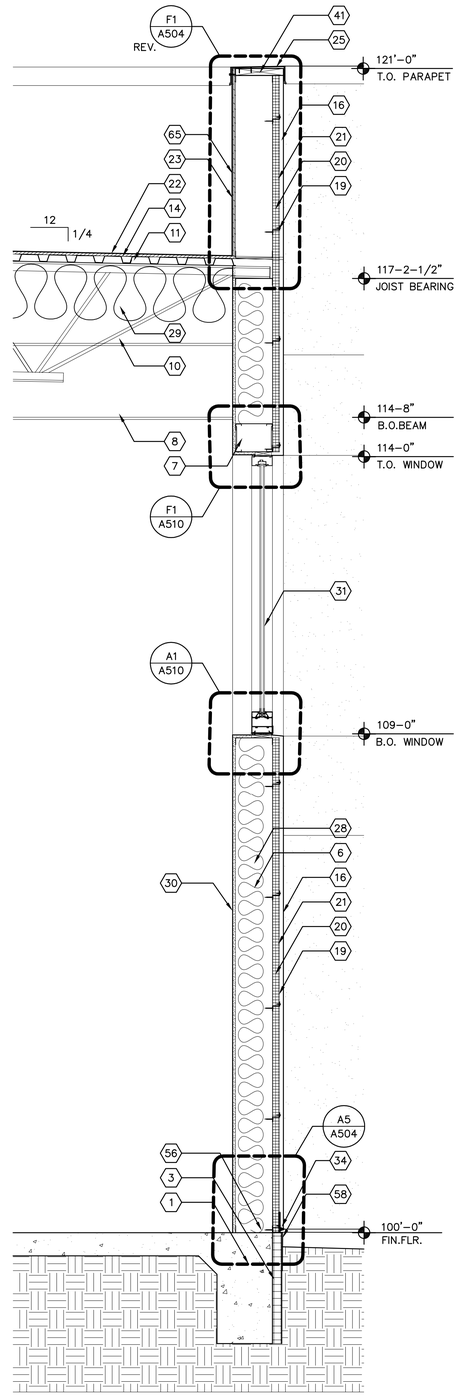

A5 WALL SECTION
3/4"=1'-0"

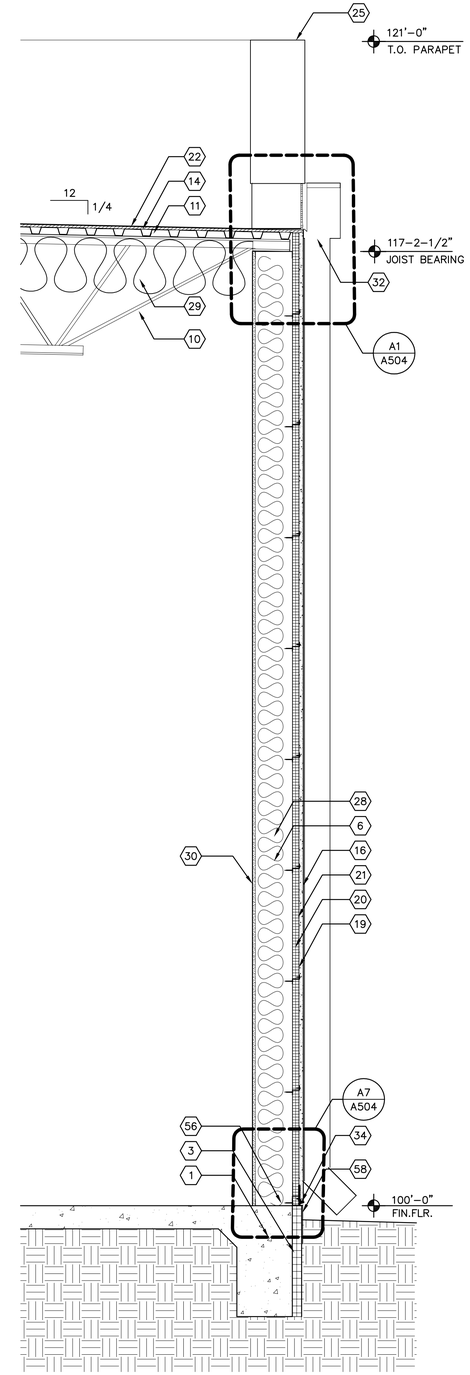

A7 WALL SECTION
3/4"=1'-0"

GENERAL SHEET NOTES

A. DO NOT SCALE DRAWINGS.
B. CONTRACTOR TO COORDINATE ALL DRAWINGS PRIOR TO CONSTRUCTION.
C. VERIFY EXISTING CONDITIONS IN FIELD. BRING DISCREPANCIES TO ATTENTION OF ARCHITECT.
D. DIMENSIONS ARE TO STUDS UNLESS OTHERWISE NOTED. 'FF' INDICATES THAT THE DIMENSION IS A CRITICAL FINISHED DIMENSION MEASURED TO THE FINISHED FACE OF PARTITIONS.
E. SEE SHEET A501 FOR PARTITION / WALL TYPES.
F. EXIT LIGHTS AND REMOTE INDICATOR LIGHTS LOCATED OVER DOORS SHALL BE CENTERED ON DOOR OPENING U.O.N.
G. EXIT LIGHTS AT CORRIDORS SHALL BE CENTERED U.O.N. AT SOFFITS AND CEILINGS, COORDINATE LIGHTING FIXTURE LOCATIONS WITH MECHANICAL WORK.

SHEET KEYNOTES

1. CONCRETE FOOTING, SEE STRUCTURAL
2. 5" CONCRETE SLAB ON GRADE WITH SLICK TROWEL FINISH
3. 2" (R-10 MIN.) RIGID PERIMETER INSULATION, 24" DEEP
4. CONCRETE SIDEWALK, SEE CIVIL
5. 1/2" EXPANSION JOINT MATERIAL AND SEALER
6. 8" METAL WALL FRAMING, SEE STRUCTURAL
7. DOOR/WINDOW LINTEL, SEE STRUCTURAL
8. STEEL BEAM, SEE STRUCTURAL
9. NOT USED
10. OPEN WEB STEEL JOIST, SEE STRUCTURAL
11. METAL ROOF DECK, SEE STRUCTURAL
12. 12" METAL JOISTS, SEE STRUCTURAL
13. STEEL ANGLE, SEE STRUCTURAL
14. 1/2" ROOF COVER BOARD
15. NOT USED
16. 3-COAT CEMENTITIOUS STUCCO FINISH WITH 17 GA. GALVANIZED WOVEN WIRE MESH REINFORCEMENT.
17. NOT USED
18. NOT USED
19. 'Z' FORMED METAL @ 24" O.C. HORIZONTAL
20. 1.5" POLY-ISOCYANURATE INSULATION BOARD
21. VAPOR BARRIER
22. 80 MIL TPO ROOF MEMBRANE
23. 80 MIL TPO WALL FLASHING
24. TAPERED POLYISOCYANURATE INSULATION
25. PRE-FINISHED METAL PARAPET COPING, SLOPE TO INTERIOR
26. NOT USED
27. NOT USED
28. R-19 KRAFT-FACED FIBERGLASS BATT INSULATION
29. R-38 WHITE VINYL-FACED FIBERGLASS BATT INSULATION
30. 5/8' GYPSUM BOARD, PAINT FINISH,
31. ALUMINUM STOREFRONT WINDOW/DOOR UNIT, SEE WINDOW SCHEDULE.
32. PRE-FINISHED ROOF LEADER AND DOWNSPOUT
33. NOT USED
34. STUCCO DRIP EDGE WITH WEEPS
35. STUCCO TERMINATION WITH SPRING-LOCK ROOF MEMBRANE FLASHING
36. SEALANT AND BACKER ROD
37. NOT USED
38. NOT USED
39. NOT USED
40. NOT USED
41. 1-1/2" SOLID FIRE-TREATED WOOD BLOCKING
42. 3/4" FIRE-TREATED WOOD BLOCKING
43. SOLID FIRE-TREATED WOOD BLOCKING, AS REQUIRED
44. SHIM, AS REQUIRED
45. NOT USED
46. NOT USED
47. NOT USED
48. NOT USED
49. NOT USED
50. NOT USED
51. NOT USED
52. NOT USED
53. NOT USED
54. NOT USED
55. NOT USED
56. 8" WIDE FOAM SILL SEALANT
57. NOT USED
58. BRAKE METAL FLASHING TO MATCH WALL COLOR
59. NOT USED
60. MECHANICAL DUCT/DIFFUSER, SEE MECHANICAL
61. 7/8" STUCCO DRIP SCREED
62. 6" METAL FRAMING @ 16" O.C.
63. NOT USED
64. FOLDING PARTITION TRACK AND HARDWARE
65. 1/2" FIRE-TREATED EXTERIOR RATED PLYWOOD

G. DONALD DUDLEY AIA
ARCHITECT
ARCHITECTURE • INTERIORS • PLANNING
AIA • NCARB • LEED AP
SIMMS TOWER STUDIO 850
400 GOLD AVENUE SW
ALBUQUERQUE, NEW MEXICO 87102
TEL 505.243.8100

STATE OF NEW MEXICO
G. DONALD DUDLEY, JR.
No. 3673
4/13/2020
REGISTERED ARCHITECT

NEW BUILDING FOR:
RIO RANCHO SENIOR CENTER
CITY OF RIO RANCHO
NEW MEXICO

MARK	DATE	DESCRIPTION

GDDA PROJECT NO: 18-137
DATE: 4/13/2020
DRAWN BY: gdd/pb
CHECKED BY: gdd/pb
SET NO:
SHEET TITLE: WALL SECTIONS ADD ALTERNATE #1

A315

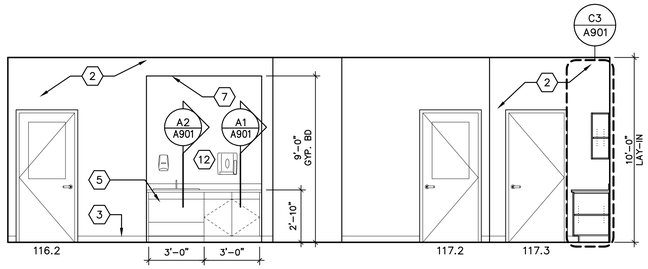

CLASSROOM A 116 CLASSROOM B 117

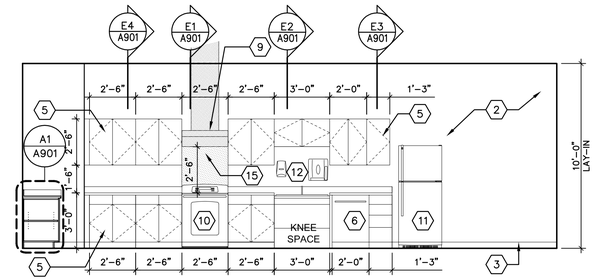

CLASSROOM B 117

NOTE:
SINK AREA IS LOWER THAN ADJACENT COUNTERTOPS

G1 CLASSROOM 116/117

1/4"=1'-0"

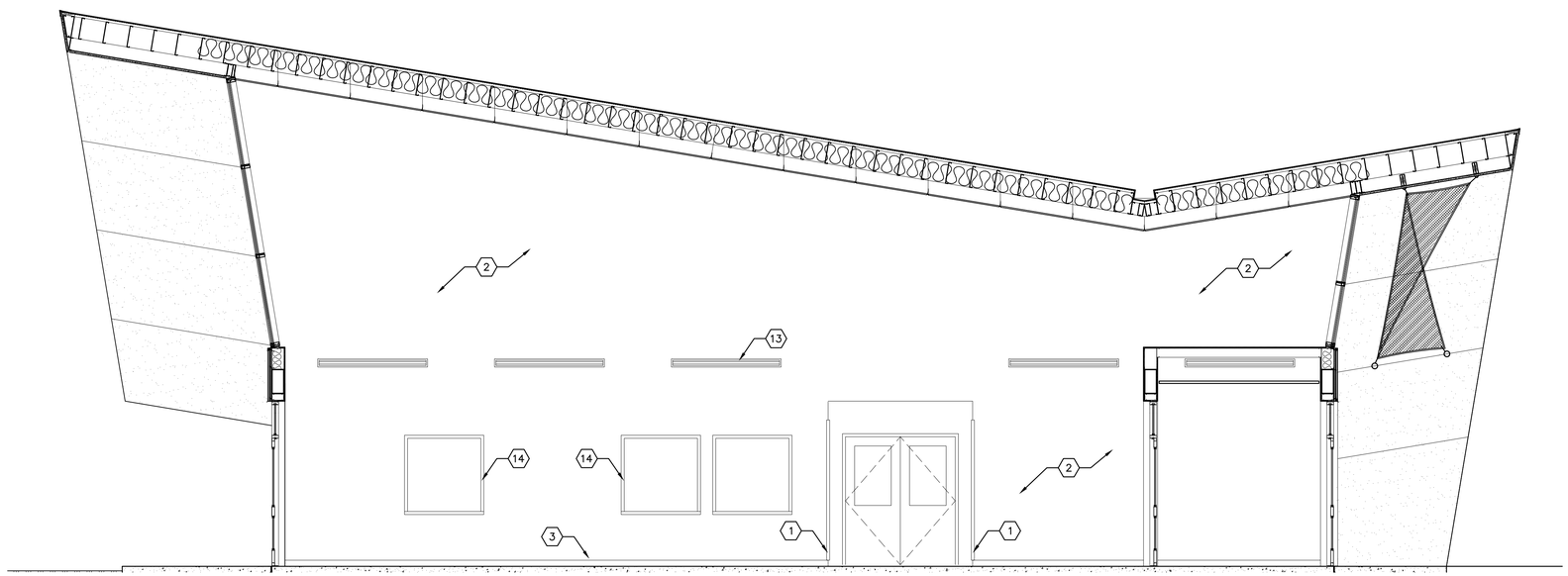

B1 LOUNGE 109 & VESTIBULE 107

1/4"=1'-0"

GENERAL SHEET NOTES

A. DO NOT SCALE DRAWINGS.
B. CONTRACTOR TO COORDINATE ALL DRAWINGS PRIOR TO CONSTRUCTION.
C. VERIFY EXISTING CONDITIONS IN FIELD. BRING DISCREPANCIES TO THE ATTENTION OF THE ARCHITECT.
D. DIMENSIONS ARE TO GRIDLINE AND FACE OF STUD UNLESS NOTED OTHERWISE.
E. 'FF' INDICATES THAT THE DIMENSION IS A CRITICAL FINISHED DIMENSION MEASURED TO THE FINISHED FACE OF PARTITIONS.
F. SEE SHEET A606 FOR ROOM FINISH SCHEDULE.
G. REFER TO ENLARGED PLANS FOR DIMENSIONS WITHIN THOSE AREAS.
H. SEE SHEET A501 FOR PARTITION / WALL TYPES.
I. SEE REFLECTED CEILING PLANS FOR CEILING HEIGHTS.
J. PROVIDE MOISTURE RESISTANT GYPSUM BOARD AT ALL RESTROOMS AND CUSTODIAL ROOMS.

SHEET KEYNOTES ⬡

1. STAINLESS STEEL CORNER GUARD, TYP.
2. 5/8" GYPSUM BOARD, PAINTED
3. 4" RUBBER COVE BASE
4. NOT USED
5. PLASTIC LAMINATE CASEWORK, PROVIDE BLOCKING IN WALL AS REQUIRED, REFER TO SHEET A901
6. DISHWASHER, SEE SPECIFICATIONS
7. GYP. BD. SOFFIT
8. NOT USED
9. SS EXHAUST HOOD AND DUCTWORK, SEE MECHANICAL
10. RANGE, SEE SPECIFICATIONS
11. REFRIGERATOR, SEE SPECIFICATIONS
12. SOAP AND PAPER TOWEL DISPENSER, SEE SPECIFICATIONS
13. HVAC DIFFUSER, SEE MECHANICAL
14. STAINLESS STEEL JAMB, SEE DOOR SCHEDULE & SPECIFICATIONS
15. STAINLESS STEEL WALL PANEL, SEE SPECIFICATIONS

G. DONALD DUDLEY AIA
ARCHITECT
ARCHITECTURE • INTERIORS • PLANNING
AIA • NCARB • LEED AP
SIMMS TOWER STUDIO 850
400 GOLD AVENUE SW
ALBUQUERQUE, NEW MEXICO 87102
TEL 505.243.8100

STATE OF NEW MEXICO
G. DONALD DUDLEY, JR.
No. 3673
4/13/2020
REGISTERED ARCHITECT

NEW BUILDING FOR:
RIO RANCHO SENIOR CENTER
CITY OF RIO RANCHO NEW MEXICO

MARK	DATE	DESCRIPTION

GDDA PROJECT NO: 18-137
DATE: 4/13/2020
DRAWN BY: gdd/pb
CHECKED BY: gdd/pb
SET NO:
SHEET TITLE: INTERIOR ELEVATIONS

A401

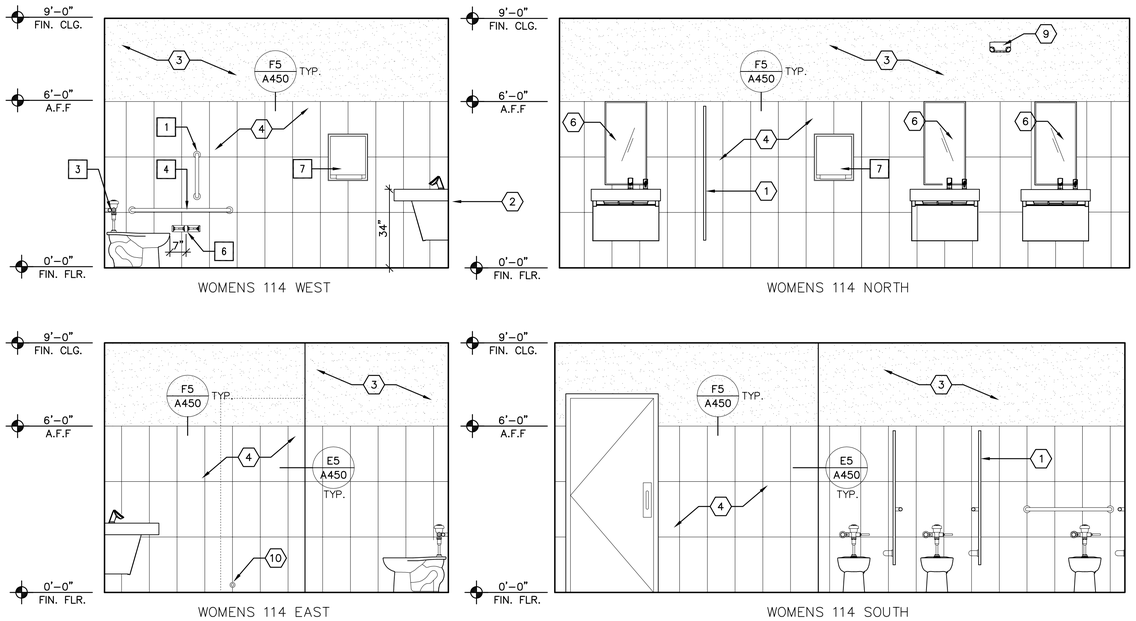

E1 WOMENS 114 – INTERIOR ELEVATIONS
3/8"=1'-0"

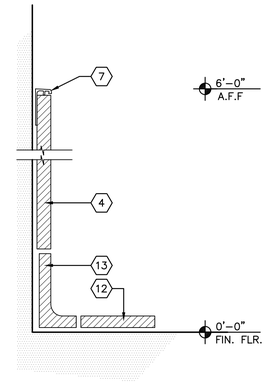

F5 TILE SILL/HEAD
6"=1'-0"

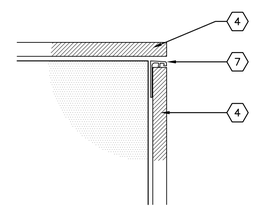

E5 WALL TILE CORNER
6"=1'-0"

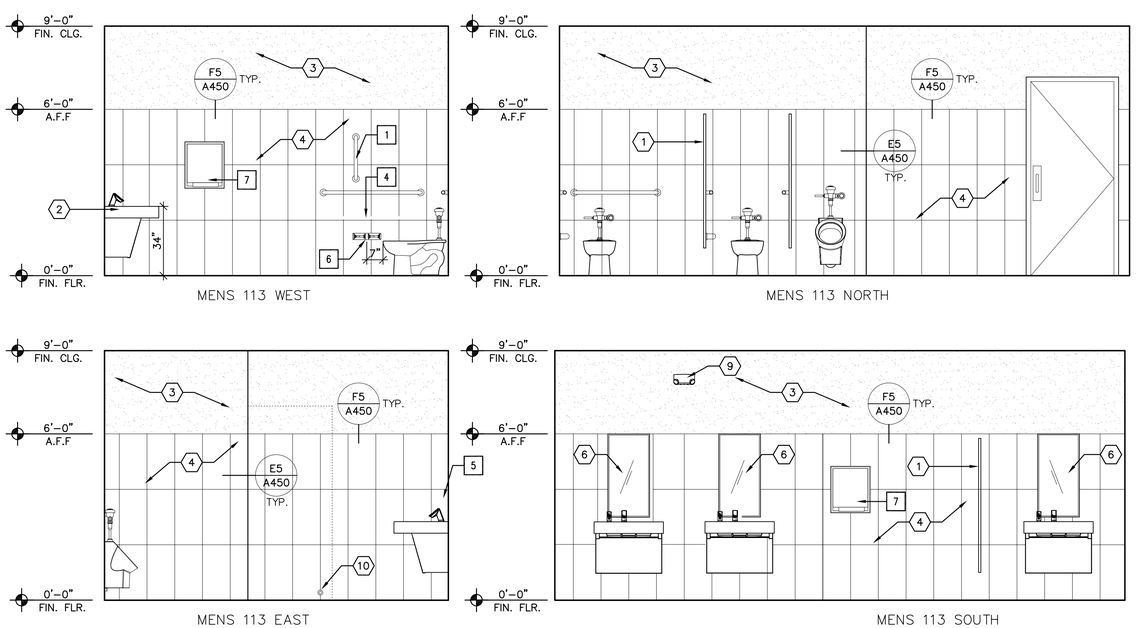

A1 MENS 113 – INTERIOR ELEVATIONS
3/8"=1'-0"

TOILET ACCESSORIES

1	BOBRICK B-6806 99 X 18"	GRAB BAR, 18" STAINLESS STEEL. (PROVIDE BLOCKING IN WALL)
2	BOBRICK B-6806 99 X 24"	GRAB BAR, 24" STAINLESS STEEL. (PROVIDE BLOCKING IN WALL)
3	BOBRICK B-6806 99 X 36"	GRAB BAR, 36" STAINLESS STEEL. (PROVIDE BLOCKING IN WALL)
4	BOBRICK B-6806 99 X 42"	GRAB BAR, 42" STAINLESS STEEL. (PROVIDE BLOCKING IN WALL)
5	KIMBERLY CLARK 91180	SURFACE MOUNTED SOAP DISPENSER
6	BOBRICK B-265.	SURFACE MOUNT, DUAL ROLL, TOILET PAPER DISPENSER;
7	BOBRICK B-29744	PAPER TOWEL DISPENSER
8	BOBRICK B-254	STAINLESS STEEL, SURFACE MOUNTED SANITARY NAPKIN DISPOSAL
9	BOBRICK B-2280	21 GALLON WASTE RECEPTACLE
10	KOALA KARE KB110-SSRE	DIAPER CHANGING TABLE (RECESSED)

SEE SPECS FOR INSTALLATION INSTRUCTIONS FOR ALL TOILET ACCESSORIES, INSTALL PER MANUFACTURES RECOMMENDATION

GENERAL SHEET NOTES

A. DO NOT SCALE DRAWINGS.
B. CONTRACTOR TO COORDINATE ALL DRAWINGS PRIOR TO CONSTRUCTION.
C. DIMENSIONS ARE TO STUDS UNLESS OTHERWISE NOTED.
D. 'FF' INDICATES THAT THE DIMENSION IS A CRITICAL FINISHED DIMENSION MEASURED TO THE FINISHED FACE OF PARTITIONS.
E. PROVIDE TOILET PARTITIONS PER SPECIFICATIONS SECTION 10 21 14 CONTRACTOR TO VERIFY SIZES AND LAYOUT OF NEW PARTITIONS PRIOR TO ORDERING. INSTALL PARTITIONS IN THE LOCATIONS PER FLOOR PLANS UNLESS OTHERWISE NOTED.
F. PROVIDE NEW PLUMBING FIXTURES PER PLUMBING DRAWINGS. INSTALL PLUMBING FIXTURE PER PLANS AND ELEVATIONS. LOCATE ACCESSIBLE W.C PER FLOOR PLANS AND ELEVATIONS. LOCATE ALL OTHER W.C'S IN THE CENTER OF STALL-TYP. REFER TO PLUMBING DRAWINGS FOR ADDITIONAL INFORMATION.
G. PROVIDE NEW TOILET ACCESSORIES PER DRAWINGS AND TOILET ACCESSORIES SCHEDULE. PROVIDE BLOCK OUT IN WALL FOR INSTALLATION OF PAPER TOWEL DISPENSERS PER MANUFACTURER'S RECOMMENDATION. REFER TO TOILET ACCESSORY SCHEDULE FOR MODEL NUMBER.
H. PROVIDE SOLID WOOD BLOCKING AND BACKING AS REQUIRED FOR INSTALLATIONS OF WALL MOUNTED ACCESSORIES, GRAB BARS, AND OTHER WALL PARTITION MOUNTED ACCESSORIES.
I. PROVIDE ACCESSIBLE TOILET ROOM SIGN (TACTILE SIGN WITH BRAILLE AND INTERNATIONAL SYMBOL OF ACCESSIBILITY.

SHEET KEYNOTES

1. METAL TOILET PARTITIONS. SEE SPECIFICATIONS.
2. PLUMBING FIXTURE AS SCHEDULED, SEE MECHANICAL.
3. GYPSUM BOARD. PAINTED
4. 12"X24" PORCELAIN WALL TILE, INSTALL VERTICAL STACK BOND.
5. NOT USED.
6. 18" X 36" X $\frac{1}{4}$" MIRROR.
7. ANODIZED ALUMINUM EDGING AT TILE. SCHLUTER-SCHIENE BY SCHLUTER SYSTEMS.
8. FLOOR DRAIN. SEE PLUMBING SCHEDULE.
9. EMERGENCY LIGHT.
10. WALL STOP: ROCKWOOD 476
11. TILE TRANSITION. SEE SPECIFICATIONS
12. FLOOR TILE, SEE SPECIFICATIONS.
13. TILE COVE BASE TO MATCH FLOOR TILE.

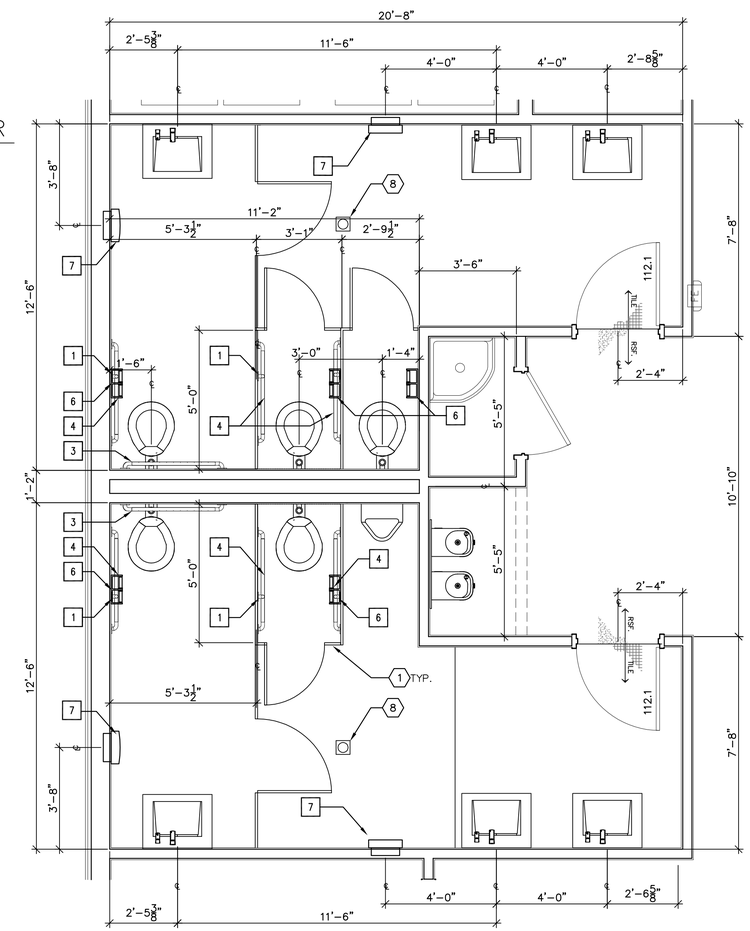

A6 ENLARGED PLAN – MENS 113 & WOMENS 114
3/8"=1'-0"

G. DONALD DUDLEY AIA
ARCHITECT
ARCHITECTURE • INTERIORS • PLANNING
AIA • NCARB • LEED AP
SIMMS TOWER STUDIO 850
400 GOLD AVENUE SW
ALBUQUERQUE, NEW MEXICO 87102
TEL 505.243.8100

STATE OF NEW MEXICO
G. DONALD DUDLEY, JR.
No. 3673
4/13/2020
REGISTERED ARCHITECT

NEW BUILDING FOR:
RIO RANCHO SENIOR CENTER
CITY OF RIO RANCHO NEW MEXICO

MARK	DATE	DESCRIPTION

GDDA PROJECT NO: 18-137
DATE: 4/13/2020
DRAWN BY: gdd/pb
CHECKED BY: gdd/pb
SET NO:
SHEET TITLE: ENLARGED TOILET PLANS & ELEVATIONS

A450

NOTE:
PROVIDE SOLID WOOD BLOCKING AND BACKING AS REQUIRED FOR INSTALLATIONS OF WALL MOUNTED ACCESSORIES, GRAB BARS, AND PENCIL SHARPENERS

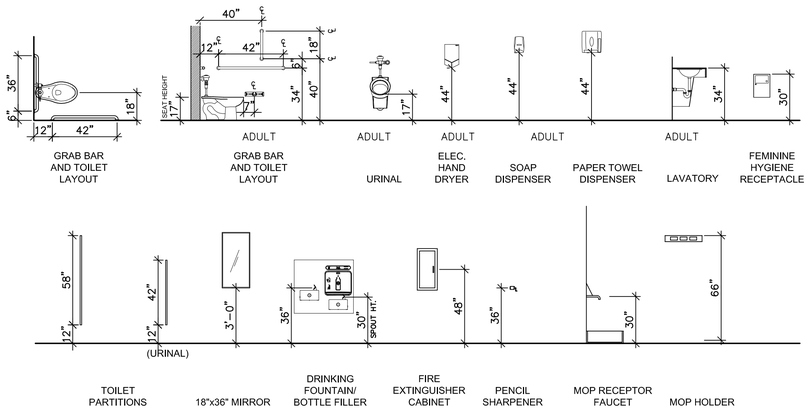

E1 FIXTURE HEIGHTS
1/4"=1'-0"

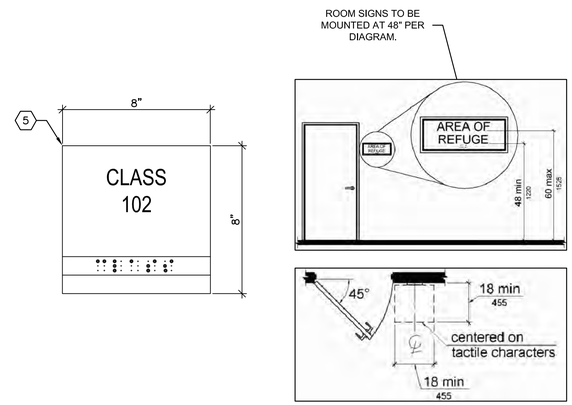

E4 ROOM SIGNS
3" = 1'-0"

NOTE: GC TO PLAN PRE-CON WALK-THROUGH WITH ARCHITECT PRIOR TO SIGN INSTALLATION.

TOILET ACCESSORIES

1	BOBRICK B-6806 99 X 18"	GRAB BAR, 18" STAINLESS STEEL. (PROVIDE BLOCKING IN WALL)
2	BOBRICK B-6806 99 X 24"	GRAB BAR, 24" STAINLESS STEEL. (PROVIDE BLOCKING IN WALL)
3	BOBRICK B-6806 99 X 36"	GRAB BAR, 36" STAINLESS STEEL. (PROVIDE BLOCKING IN WALL)
4	BOBRICK B-6806 99 X 42"	GRAB BAR, 42" STAINLESS STEEL. (PROVIDE BLOCKING IN WALL)
5	KIMBERLY CLARK 91180	SURFACE MOUNTED SOAP DISPENSER
6	BOBRICK B-265.	SURFACE MOUNT, DUAL ROLL, TOILET PAPER DISPENSER;
7	BOBRICK B-29744	PAPER TOWEL DISPENSER
8	BOBRICK B-254	STAINLESS STEEL, SURFACE MOUNTED SANITARY NAPKIN DISPOSAL
9	BOBRICK B-2280	21 GALLON WASTE RECEPTACLE
10	KOALA KARE KB110-SSRE	DIAPER CHANGING TABLE (RECESSED)

SEE SPECS FOR INSTALLATION INSTRUCTIONS FOR ALL TOILET ACCESSORIES, INSTALL PER MANUFACTURES RECOMMENDATION

GENERAL SHEET NOTES

A. DO NOT SCALE DRAWINGS.
B. CONTRACTOR TO COORDINATE ALL DRAWINGS PRIOR TO CONSTRUCTION.
C. DIMENSIONS ARE TO STUDS UNLESS OTHERWISE NOTED.
D. 'FF' INDICATES THAT THE DIMENSION IS A CRITICAL FINISHED DIMENSION MEASURED TO THE FINISHED FACE OF PARTITIONS.
E. PROVIDE TOILET PARTITIONS PER SPECIFICATIONS SECTION 10 21 14 CONTRACTOR TO VERIFY SIZES AND LAYOUT OF NEW PARTITIONS PRIOR TO ORDERING. INSTALL PARTITIONS IN THE LOCATIONS PER FLOOR PLANS UNLESS OTHERWISE NOTED.
F. PROVIDE NEW PLUMBING FIXTURES PER PLUMBING DRAWINGS. INSTALL PLUMBING FIXTURE PER PLANS AND ELEVATIONS. LOCATE ACCESSIBLE W.C PER FLOOR PLANS AND ELEVATIONS. LOCATE ALL OTHER W.C'S IN THE CENTER OF STALL-TYP. REFER TO PLUMBING DRAWINGS FOR ADDITIONAL INFORMATION.
G. PROVIDE NEW TOILET ACCESSORIES PER DRAWINGS AND TOILET ACCESSORIES SCHEDULE. PROVIDE BLOCK OUT IN WALL FOR INSTALLATION OF PAPER TOWEL DISPENSERS PER MANUFACTURER'S RECOMMENDATION. REFER TO TOILET ACCESSORY SCHEDULE FOR MODEL NUMBER.
H. PROVIDE SOLID WOOD BLOCKING AND BACKING AS REQUIRED FOR INSTALLATIONS OF WALL MOUNTED ACCESSORIES, GRAB BARS, AND OTHER WALL PARTITION MOUNTED ACCESSORIES.
I. PROVIDE ACCESSIBLE TOILET ROOM SIGN (TACTILE SIGN WITH BRAILLE AND INTERNATIONAL SYMBOL OF ACCESSIBILITY.

SHEET KEYNOTES

1. METAL TOILET PARTITIONS. SEE SPECIFICATIONS.
2. PLUMBING FIXTURE AS SCHEDULED, SEE MECHANICAL.
3. GYPSUM BOARD. PAINTED
4. 12"X24" PORCELAIN WALL TILE, INSTALL VERTICAL STACK BOND.
5. ROOM SIGN TO DOOR. SEE SPESIFICATIONS.
6. 18" X 36" X ¼" MIRROR.
7. ANODIZED ALUMINUM EDGING AT TILE. SCHLUTER-SCHIENE BY SCHLUTER SYSTEMS.
8. FLOOR DRAIN. SEE PLUMBING SCHEDULE.
9. EMERGENCY LIGHT.
10. WALL STOP: ROCKWOOD 476
11. TILE TRANSITION. SEE SPECIFICATIONS
12. FLOOR TILE, SEE SPECIFICATIONS.
13. TILE COVE BASE TO MATCH FLOOR TILE.

SIMMS TOWER STUDIO 850
400 GOLD AVENUE SW
ALBUQUERQUE, NEW MEXICO 87102
TEL 505.243.8100

G. DONALD DUDLEY AIA
ARCHITECT
ARCHITECTURE • INTERIORS • PLANNING
AIA • NCARB • LEED AP

STATE OF NEW MEXICO
G. DONALD DUDLEY, JR.
No. 3673
4/13/2020
REGISTERED ARCHITECT

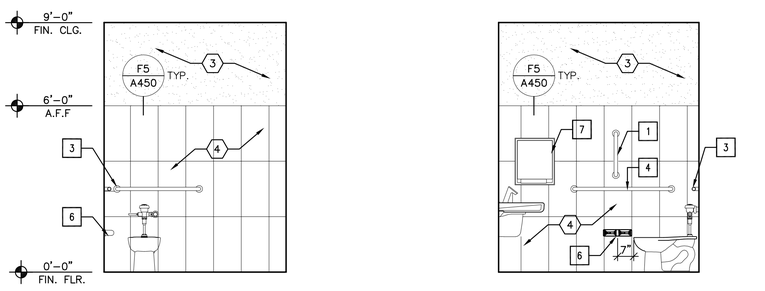

GENDER NEUTRAL 113 NORTH
GENDER NEUTRAL 113 EAST
GENDER NEUTRAL 113 SOUTH
GENDER NEUTRAL 113 WEST

A1 GENDER NEUTRAL 102 – INTERIOR ELEVATIONS
3/8"=1'-0"

NOTE:
DASHED LINES INDICATE REQUIRED CLEARANCES PER ANSI A117.1 / ADAAG

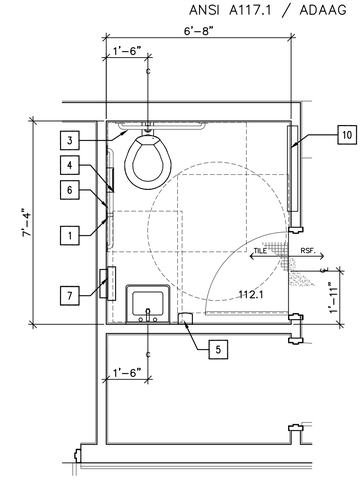

A7 ENLARGED PLAN – GENDER NEUTRAL 102
3/8"=1'-0"

NEW BUILDING FOR:
RIO RANCHO SENIOR CENTER
CITY OF RIO RANCHO NEW MEXICO

MARK	DATE	DESCRIPTION

GDDA PROJECT NO: 18-137
DATE: 4/13/2020
DRAWN BY: gdd/pb
CHECKED BY: gdd/pb
SET NO:
SHEET TITLE: ENLARGED TOILET PLANS & ELEVATIONS

A451

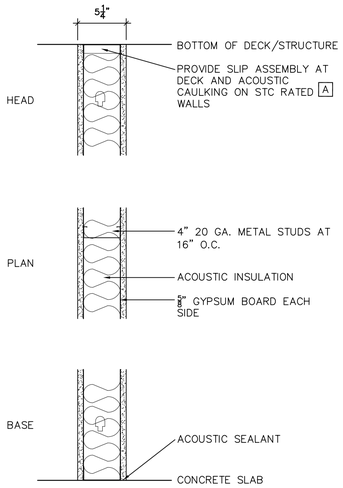

A 4" WALL TYPE STC 45
1½" = 1'-0"

B NOT USED

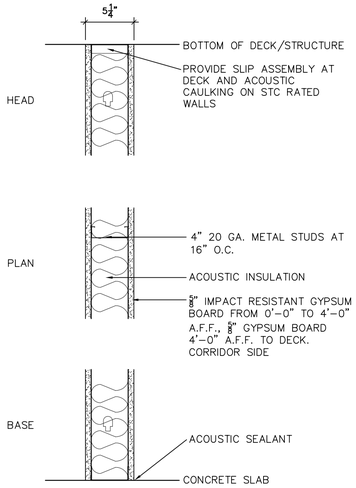

C 4" WALL TYPE IMPACT RESISTANT STC 45
1½" = 1'-0"

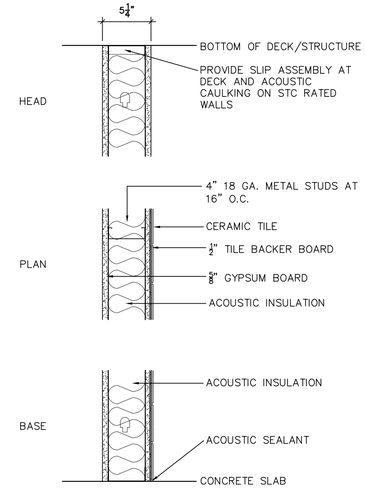

D 4" WALL TYPE TILE SURFACE
1½" = 1'-0"

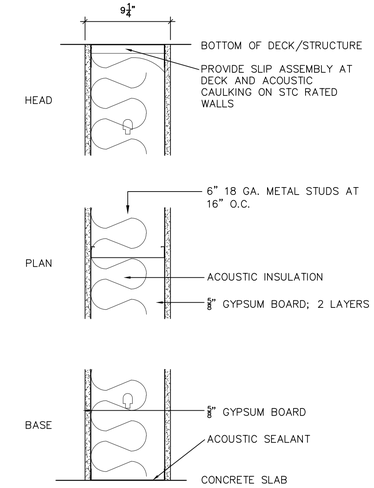

E 8" WALL TYPE (BEARING) STC 45
1½" = 1'-0"

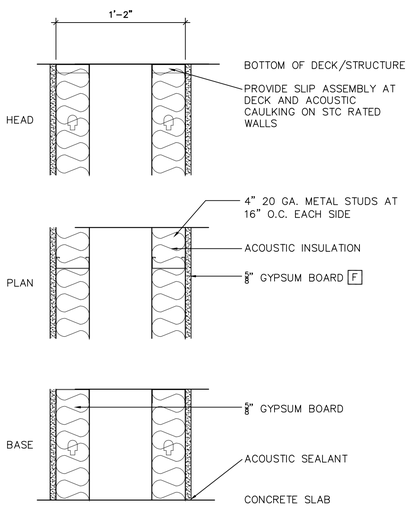

F WALL TYPE
1½" = 1'-0"

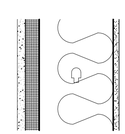

1 EXTERIOR WALL; 8" 18 GA. METAL STUDS AT 16" O.C. W/ 3 COAT PORTLAND CEMENT PLASTER SYSTEM OVER BUILDING WRAP, 1.5" INSULATED SHEATHING (CONTINUOUS INSULATION R-7.5), FIBERGLASS BATT INSULATION (R-13), ⅝" GYPSUM BOARD PAINTED INTERIOR.

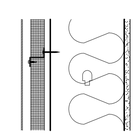

2 EXTERIOR WALL; 8" 18 GA. METAL STUDS AT 16" O.C. W/ 1" DEEP METAL SIDING PANELS, FASTENED TO 18 GA. 'Z' FORMED METAL AT 24"O.C. HORIZONTAL, 1.5" INSULATED SHEATHING AND BUILDING WRAP. FIBERGLASS BATT INSULATION (R-13) AND ⅝" GYPSUM BOARD PAINTED INTERIOR.

EXTERIOR WALL TYPE LEGEND

NOT TO SCALE

NOTE: SILL SEALER TO BE INSTALLED BETWEEN ALL EXTERIOR METAL FRAMING AND CONCRETE FOUNDATION. SEE SPECIFICATIONS.

SIMMS TOWER STUDIO 850
400 GOLD AVENUE SW
ALBUQUERQUE, NEW MEXICO
87102
TEL 505.243.8100

G. DONALD DUDLEY AIA
ARCHITECT
ARCHITECTURE • INTERIORS • PLANNING
AIA • NCARB • LEED AP

STATE OF NEW MEXICO
G. DONALD DUDLEY, JR.
No. 3673
4/13/2020
REGISTERED ARCHITECT

NEW BUILDING FOR:

RIO RANCHO SENIOR CENTER

CITY OF RIO RANCHO NEW MEXICO

MARK	DATE	DESCRIPTION

GDDA PROJECT NO: 18-137

DATE: 4/13/2020

DRAWN BY: gdd/pb

CHECKED BY: gdd/pb

SET NO:

SHEET TITLE: WALL TYPES

A501

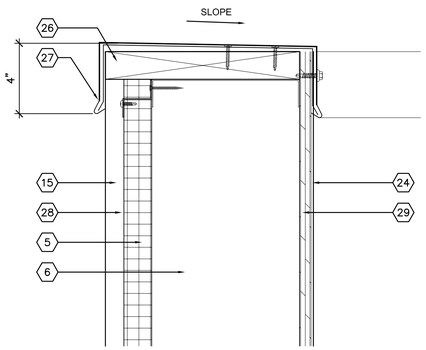

F1 PARAPET DETAIL
3" = 1'-0"

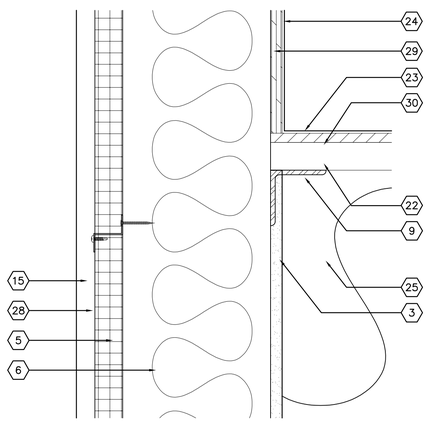

C1 ROOF EDGE DETAIL
3" = 1'-0"

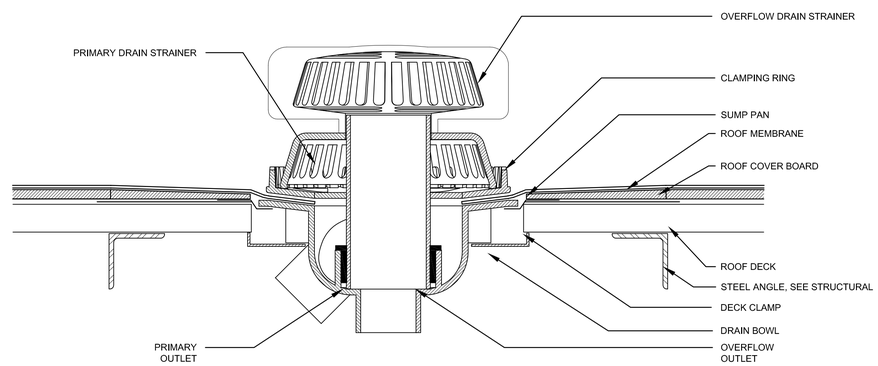

C3 ROOF DRAIN DETAIL
3" = 1'-0"

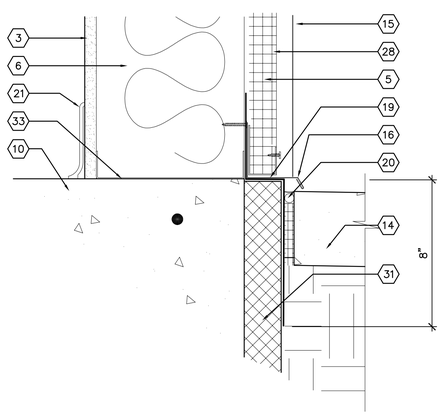

A1 WALL BASE
3" = 1'-0"

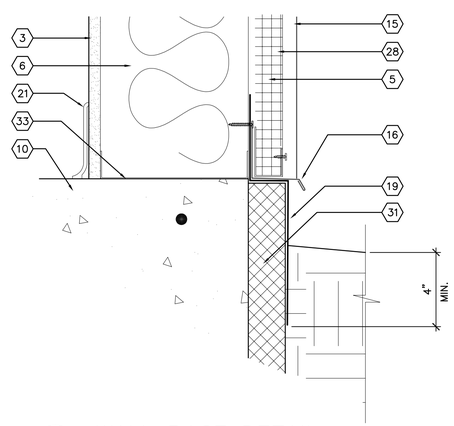

A3 WALL BASE DETAIL
3" = 1'-0"

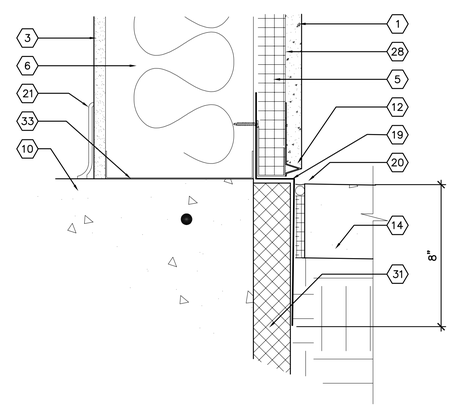

A5 WALL BASE
3" = 1'-0"

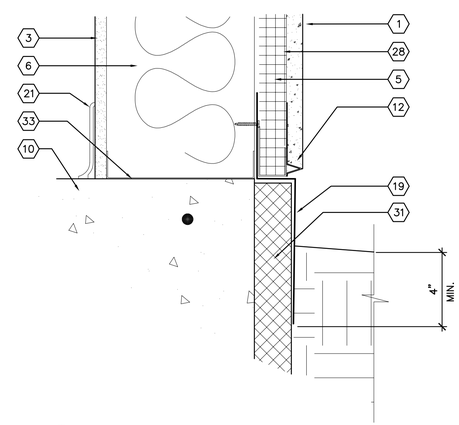

A7 WALL BASE DETAIL
3" = 1'-0"

GENERAL SHEET NOTES

A. DO NOT SCALE DRAWINGS.
B. CONTRACTOR TO COORDINATE ALL DRAWINGS PRIOR TO CONSTRUCTION.
C. VERIFY EXISTING CONDITIONS IN FIELD. BRING DISCREPANCIES TO THE ATTENTION OF THE ARCHITECT.
D. DIMENSIONS ARE TO GRIDLINE AND FACE OF STUD UNLESS NOTED OTHERWISE.
E. 'FF' INDICATES THAT THE DIMENSION IS A CRITICAL FINISHED DIMENSION MEASURED TO THE FINISHED FACE OF PARTITIONS.
F. SEE SHEET A606 FOR ROOM FINISH SCHEDULE.
G. REFER TO ENLARGED PLANS FOR DIMENSIONS WITHIN THOSE AREAS.
H. SEE SHEET A501 FOR PARTITION / WALL TYPES.
I. SEE REFLECTED CEILING PLANS FOR CEILING HEIGHTS.
J. PROVIDE MOISTURE RESISTANT GYPSUM BOARD AT ALL RESTROOMS AND CUSTODIAL ROOMS.

KEYED NOTES

1. PORTLAND CEMENT PLASTER
2. 1/4" MINIMUM SEALANT, BACKER ROD (EACH SIDE) AND SHIM
3. 5/8" GYPSUM BOARD
4. 5/8" FIRE-TREATED PLYWOOD BLOCKING.
5. 1.5" INSULATED SHEATHING ON Z-CHANNEL FURRING
6. 8" METAL STUDS WITH INSULATION, COORDINATE WITH STRUCTURAL, WALL SECTIONS AND WALL TYPES
7. LIGHT GAGE OR STEEL BEAM LINTEL, REFER TO STRUCTURAL LINTEL SCHEDULE ON SHEET S301.
8. 6" METAL CEILING JOIST AT 16"O.C.
9. STEEL ANGLE, SEE STRUCTURAL
10. CONCRETE SLAB, REFER TO STRUCTURAL.
11. BUTYL SEAM TAPE, OVERLAP BUILDING WRAP AND 6" MIN. VERTICAL AT JAMBS.
12. PLASTER DRIP SCREED
13. 3"X3" 24 GA. GALVANIZED BENT SHEET METAL AT INSULATION CORNERS FOR PLASTER LATH ATTACHMENT
14. EXTERIOR CONCRETE SLAB, SEE CIVIL
15. PRE-FINISHED METAL WALL PANEL
16. PRE-FINISHED METAL DRIP EDGE FLASHING TO MATCH WALL PANEL
17. PRE-FINISHED METAL SOFFIT PANELS
18. 5/8" GYPSUM BOARD CEILING
19. 24 GA. GALVANIZED BRAKE METAL, EXTEND BEHIND EXTERIOR RIGID INSULATION, 4" VERTICAL LEG EXTENSION A.F.F., MIN.
20. 1/2" EXPANSION JOINT WITH SELF LEVELING SEALANT
21. RESILIENT BASE
22. METAL DECK, SEE STRUCTURAL
23. 80 MIL TPO ROOF MEMBRANE
24. 80 MIL TPO WALL FLASHING
25. R-38 FIBERGLASS BATT INSULATION
26. 1-1/2" FIRE-TREATED WOOD BLOCKING
27. PRE-FINISHED PARAPET CAP FLASHING, APPLY ICE AND WATER SHIELD TO WALL BELOW BEFORE INSTALLATION
28. WEATHER-RESISTANT BARRIER
29. 1/2" FIRE-TREATED PLYWOOD
30. ROOF COVER BOARD
31. 2" RIGID INSULATION BOARD
32. PRE-FINISHED METAL TRIM PER METAL SIDING MANUFACTURER'S INSTRUCTIONS
33. FOAM SILL PLATE GASKET

SIMMS TOWER STUDIO 850
400 GOLD AVENUE SW
ALBUQUERQUE, NEW MEXICO
87102
TEL 505.243.8100

G. DONALD DUDLEY AIA
ARCHITECT
ARCHITECTURE • INTERIORS • PLANNING
AIA • NCARB • LEED AP

STATE OF NEW MEXICO
G. DONALD DUDLEY, JR.
No. 3673
4/13/2020
REGISTERED ARCHITECT

NEW BUILDING FOR:
RIO RANCHO SENIOR CENTER
CITY OF RIO RANCHO NEW MEXICO

MARK	DATE	DESCRIPTION

GDDA PROJECT NO: 18-137
DATE: 4/13/2020
DRAWN BY: gdd/pb
CHECKED BY: gdd/pb
SET NO:
SHEET TITLE: DETAILS

A502

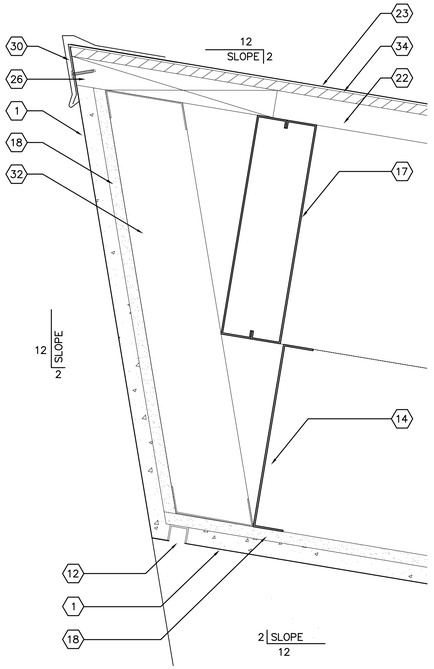

E1 FASCIA DETAIL
3" = 1'-0"

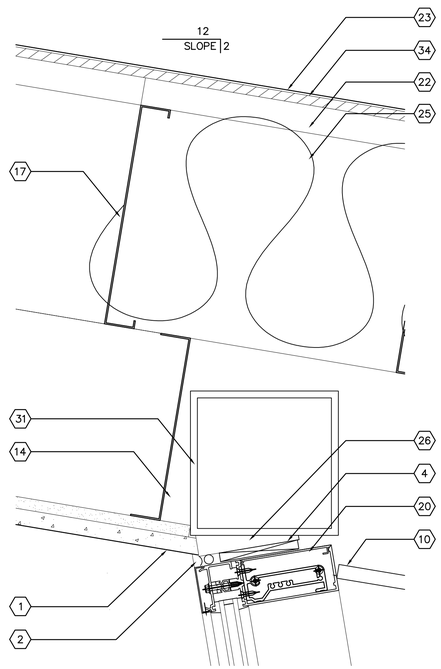

E3 CURTAIN WALL DETAIL
3" = 1'-0"

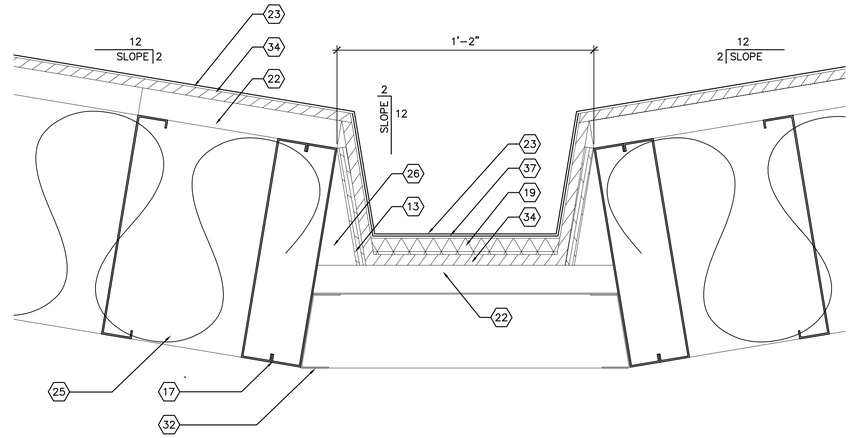

F6 GUTTER DETAIL
3" = 1'-0"

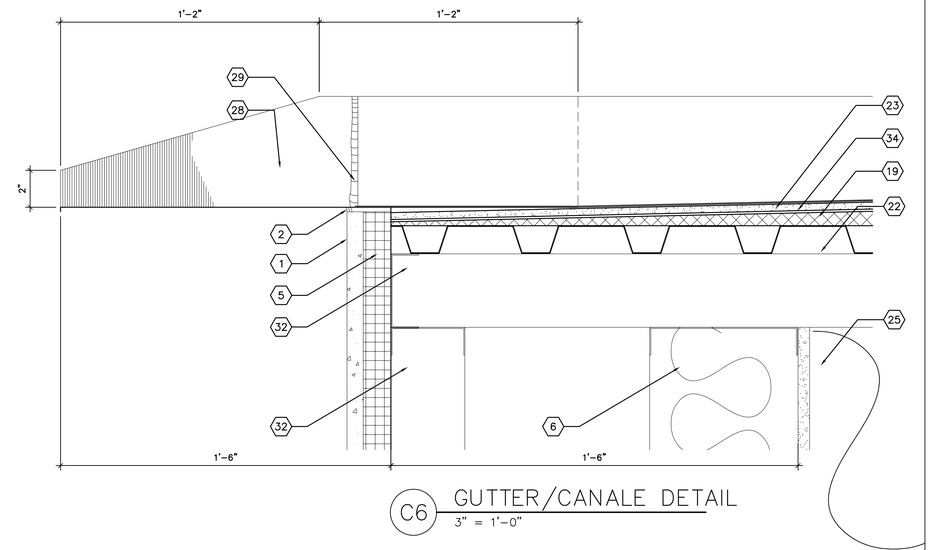

C6 GUTTER/CANALE DETAIL
3" = 1'-0"

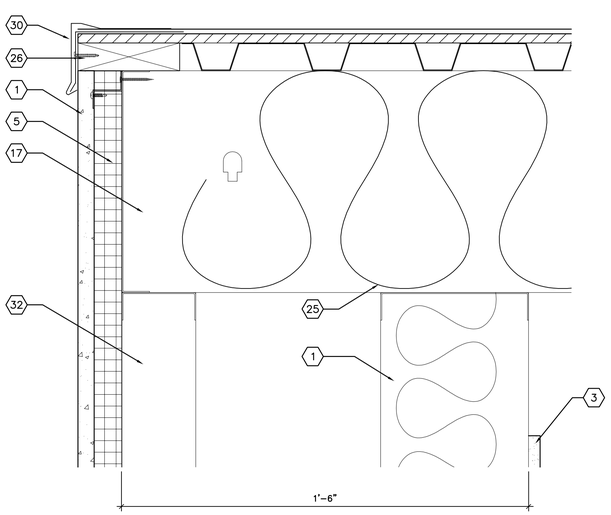

A1 RAKE DETAIL
3" = 1'-0"

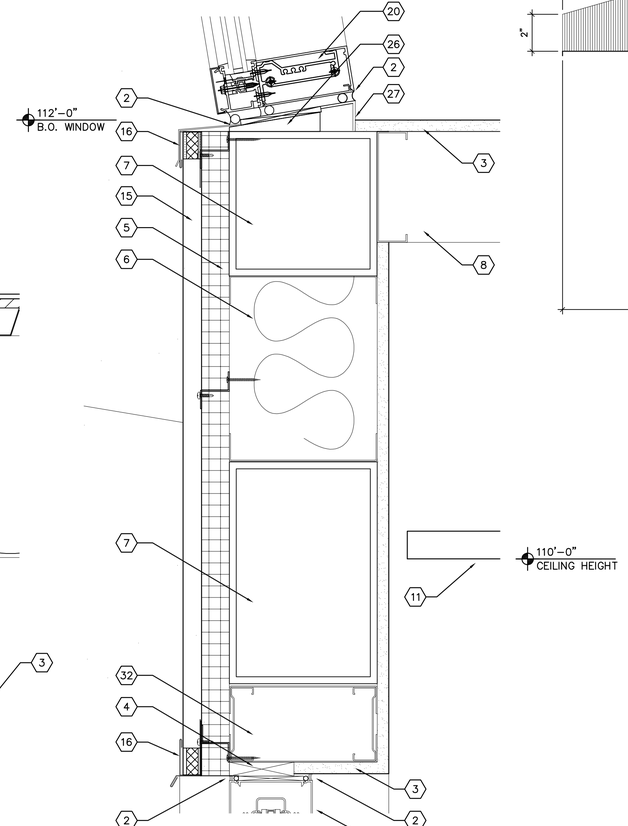

A3 WALL BASE DETAIL
3" = 1'-0"

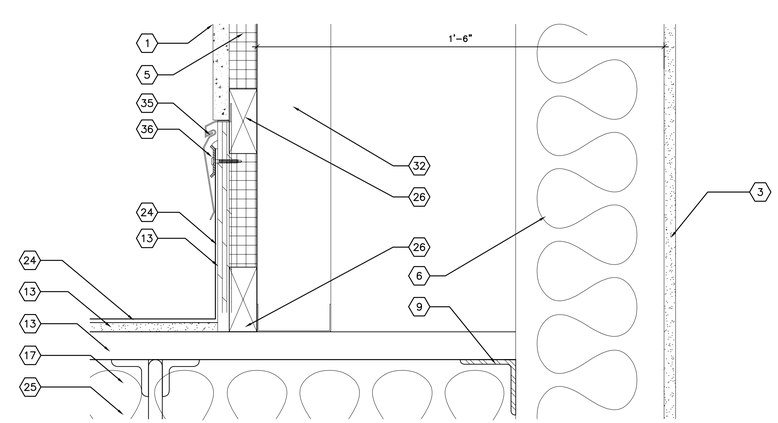

A6 WALL BASE DETAIL
3" = 1'-0"

GENERAL SHEET NOTES

A. DO NOT SCALE DRAWINGS.
B. CONTRACTOR TO COORDINATE ALL DRAWINGS PRIOR TO CONSTRUCTION.
C. VERIFY EXISTING CONDITIONS IN FIELD. BRING DISCREPANCIES TO THE ATTENTION OF THE ARCHITECT.
D. DIMENSIONS ARE TO GRIDLINE AND FACE OF STUD UNLESS NOTED OTHERWISE.
E. 'FF' INDICATES THAT THE DIMENSION IS A CRITICAL FINISHED DIMENSION MEASURED TO THE FINISHED FACE OF PARTITIONS.
F. SEE SHEET A606 FOR ROOM FINISH SCHEDULE.
G. REFER TO ENLARGED PLANS FOR DIMENSIONS WITHIN THOSE AREAS.
H. SEE SHEET A501 FOR PARTITION / WALL TYPES.
I. SEE REFLECTED CEILING PLANS FOR CEILING HEIGHTS.
J. PROVIDE MOISTURE RESISTANT GYPSUM BOARD AT ALL RESTROOMS AND CUSTODIAL ROOMS.

KEYED NOTES

1. PORTLAND CEMENT PLASTER WITH REINFORCING MESH OVER WRB
2. 1/4" MINIMUM SEALANT, BACKER ROD (EACH SIDE) AND SHIM
3. 5/8" GYPSUM BOARD
4. 5/8" FIRE-TREATED PLYWOOD BLOCKING.
5. 1.5" INSULATED SHEATHING ON Z-CHANNEL FURRING
6. 8" METAL STUDS WITH INSULATION, COORDINATE WITH STRUCTURAL, WALL SECTIONS AND WALL TYPES
7. LIGHT GAGE OR STEEL BEAM LINTEL, REFER TO STRUCTURAL LINTEL SCHEDULE ON SHEET S301.
8. 6" METAL CEILING JOIST AT 16"O.C.
9. STEEL ANGLE, SEE STRUCTURAL
10. ACOUSTICAL CEILING TILE, SEE REFLECTED CEILING PLAN
11. ACOUSTICAL CLOUD PANEL, SEE REFLECTED CEILING PLAN
12. ALUMINUM EXTRUDED DRIP SCREED FOR STUCCO
13. 1/2" FIRE-TREATED PLYWOOD
14. 10" METAL FRAMING @ 16" O.C.
15. PRE-FINISHED METAL WALL PANEL
16. PRE-FINISHED DRIP EDGE FLASHING TO MATCH WALL PANEL
17. ROOF JOIST, SEE STRUCTURAL
18. 5/8" EXTERIOR RATED GYPSUM BOARD
19. TAPERED POLYISOCYANURATE INSULATION, 1/4"/FT. SLOPE
20. ALUMINUM CURTAIN WALL SYSTEM, SEE WINDOW TYPES AND SPECIFICATIONS
21. ALUMINUM STOREFRONT WINDOW, SEE WINDOW TYPES
22. METAL DECK, SEE STRUCTURAL
23. 80 MIL TPO ROOF MEMBRANE
24. 80 MIL TPO WALL FLASHING
25. R-38 FIBERGLASS BATT INSULATION
26. 1-1/2" FIRE-TREATED WOOD BLOCKING
27. BRAKE METAL FLASHING TO MATCH WINDOW
28. 22 GA PRE-FINISHED METAL CANALE EXTENSION WITH 1/4" DRIP EDGE. COLOR TO MATCH STUCCO
29. MEMBRANE WELD PER ROOF MANUFACTURER'S INSTRUCTIONS
30. PRE-FINISHED METAL DRIP EDGE FLASHING, TO MATCH WALL COLOR BELOW
31. STEEL BEAM, SEE STRUCTURAL
32. 4" METAL FRAMING @ 16" O.C.
33. NOT USED
34. ROOF COVER BOARD
35. TERMINATION BAR AND SEALANT
36. CONTINUOUS REGLET FLASHING
37. 22 GA METAL GUTTER LINING

SIMMS TOWER STUDIO 850
400 GOLD AVENUE SW
ALBUQUERQUE, NEW MEXICO
87102
TEL 505.243.8100

G. DONALD DUDLEY AIA
ARCHITECT
ARCHITECTURE • INTERIORS • PLANNING
AIA • NCARB • LEED AP

STATE OF NEW MEXICO
G. DONALD DUDLEY, JR.
No. 3673
4/13/2020
REGISTERED ARCHITECT

NEW BUILDING FOR:
RIO RANCHO SENIOR CENTER
CITY OF RIO RANCHO NEW MEXICO

MARK	DATE	DESCRIPTION

GDDA PROJECT NO: 18-137
DATE: 4/13/2020
DRAWN BY: gdd/pb
CHECKED BY: gdd/pb
SET NO:
SHEET TITLE: DETAILS

A503

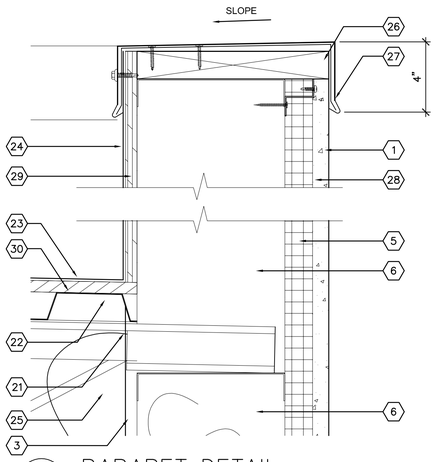

F1 PARAPET DETAIL
3" = 1'-0"

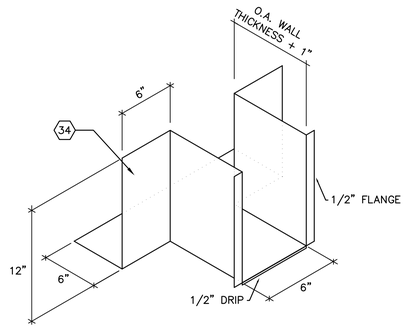

F3 SCUPPER DETAIL
3" = 1'-0"

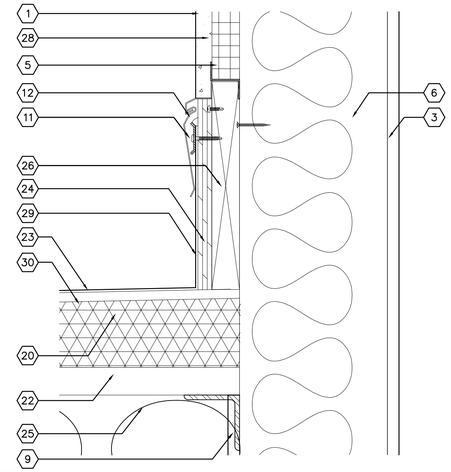

F3 ROOF DETAIL
3" = 1'-0"

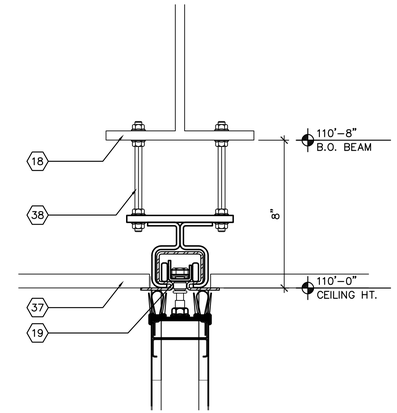

F7 PARTITION DETAIL
3" = 1'-0"

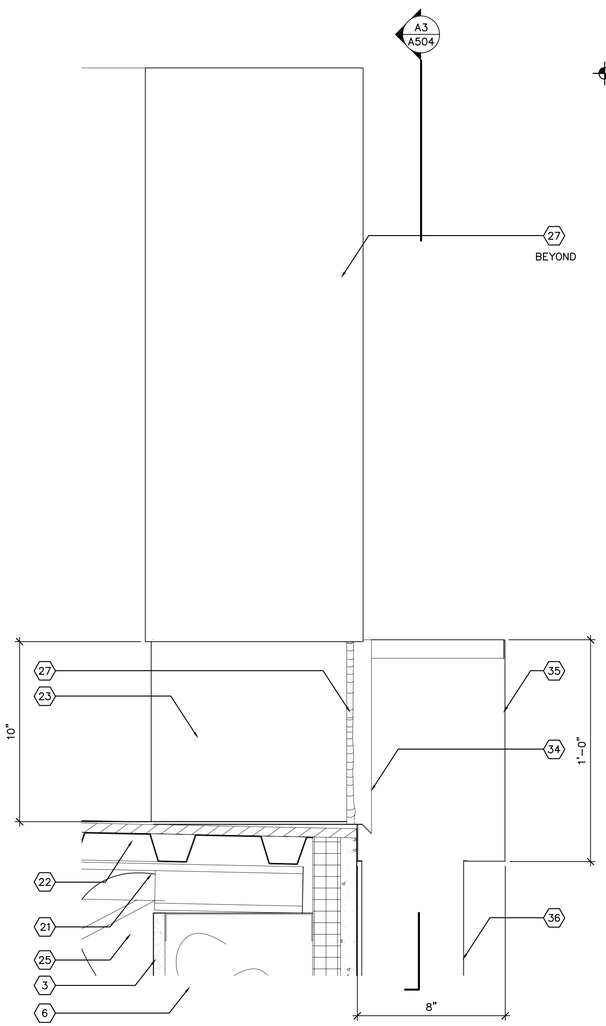

A1 ROOF DRAIN DETAIL
3" = 1'-0"

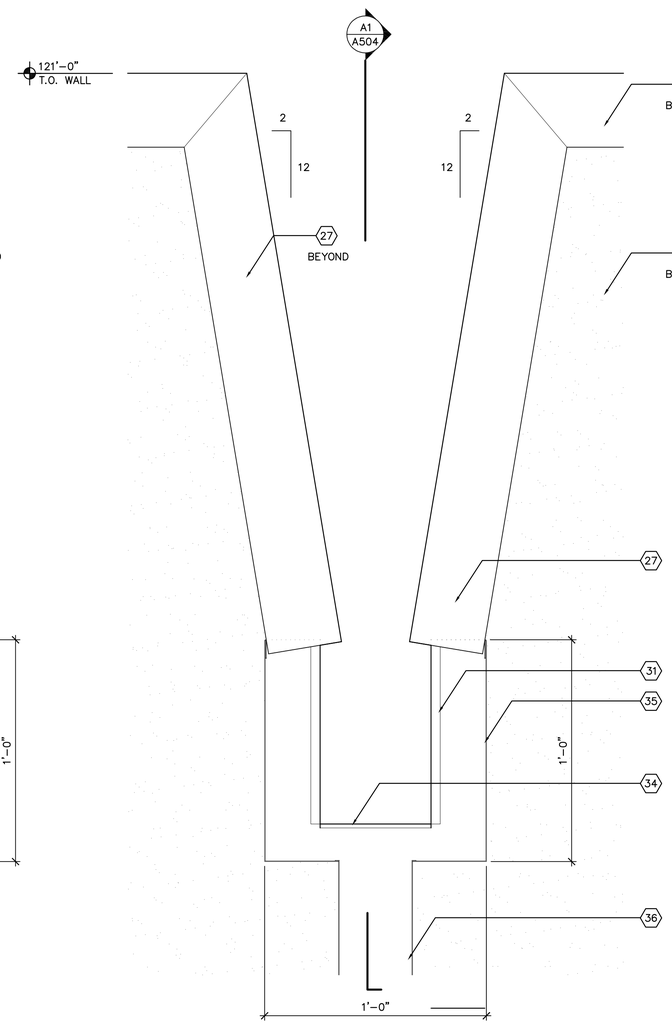

A3 ROOF DRAIN DETAIL
3" = 1'-0"

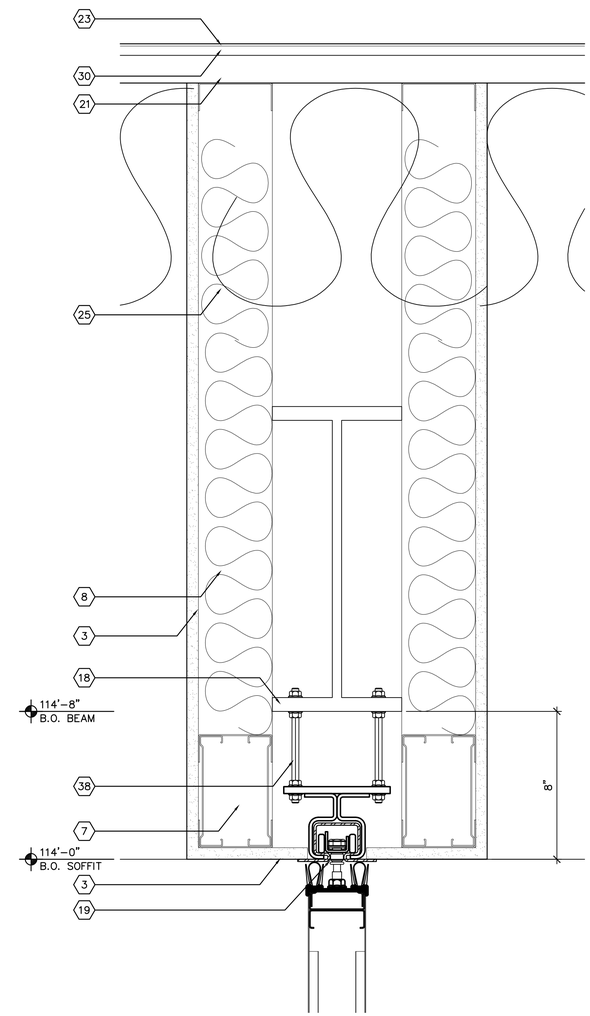

A7 PARTITION DETAIL
3" = 1'-0"

GENERAL SHEET NOTES

A. DO NOT SCALE DRAWINGS.
B. CONTRACTOR TO COORDINATE ALL DRAWINGS PRIOR TO CONSTRUCTION.
C. VERIFY EXISTING CONDITIONS IN FIELD. BRING DISCREPANCIES TO THE ATTENTION OF THE ARCHITECT.
D. DIMENSIONS ARE TO GRIDLINE AND FACE OF STUD UNLESS NOTED OTHERWISE.
E. 'FF' INDICATES THAT THE DIMENSION IS A CRITICAL FINISHED DIMENSION MEASURED TO THE FINISHED FACE OF PARTITIONS.
F. SEE SHEET A606 FOR ROOM FINISH SCHEDULE.
G. REFER TO ENLARGED PLANS FOR DIMENSIONS WITHIN THOSE AREAS.
H. SEE SHEET A501 FOR PARTITION / WALL TYPES.
I. SEE REFLECTED CEILING PLANS FOR CEILING HEIGHTS.
J. PROVIDE MOISTURE RESISTANT GYPSUM BOARD AT ALL RESTROOMS AND CUSTODIAL ROOMS.

KEYED NOTES

1. PORTLAND CEMENT PLASTER WITH REINFORCING MESH OVER WRB
2. 2. 1/4" MINIMUM SEALANT, BACKER ROD (EACH SIDE) AND SHIM
3. 5/8" GYPSUM BOARD
4. 5/8" FIRE-TREATED PLYWOOD BLOCKING.
5. 1.5" INSULATED SHEATHING ON Z-CHANNEL FURRING
6. 8" METAL STUDS WITH INSULATION, COORDINATE WITH STRUCTURAL, WALL SECTIONS AND WALL TYPES
7. LIGHT GAGE OR STEEL BEAM LINTEL, REFER TO STRUCTURAL LINTEL SCHEDULE ON SHEET S301.
8. 4" METAL STUDS @ 16" O.C.
9. STEEL ANGLE, SEE STRUCTURAL
10. CONCRETE SLAB, REFER TO STRUCTURAL.
11. TERMINATION BAR AND SEALANT
12. CONTINUOUS REGLET FLASHING
13. 3"X3" 24 GA. GALVANIZED BENT SHEET METAL AT INSULATION CORNERS FOR PLASTER LATH ATTACHMENT
14. EXTERIOR CONCRETE SLAB, SEE CIVIL
15. NOT USED
16. NOT USED
17. WELD MEMBRANE PER MANUFACTURER'S INSTRUCTIONS
18. STEEL BEAM, SEE STRUCTURAL
19. PARTITION WALL HARDWARE, SEE SPECIFICATIONS
20. TAPERED RIGID INSULATION CRICKET
21. STEEL ROOF JOIST, SEE STRUCTURAL
22. METAL DECK, SEE STRUCTURAL
23. 80 MIL TPO ROOF MEMBRANE
24. 80 MIL TPO WALL FLASHING
25. R-38 FIBERGLASS BATT INSULATION
26. 1-1/2" FIRE-TREATED WOOD BLOCKING
27. PRE-FINISHED PARAPET CAP FLASHING, APPLY ICE AND WATER SHIELD TO WALL BELOW BEFORE INSTALLATION
28. WEATHER-RESISTANT BARRIER
29. 1/2" FIRE-TREATED PLYWOOD
30. ROOF COVER BOARD
31. SEALANT, AS REQUIRED
32. PRE-FINISHED METAL TRIM PER METAL SIDING MANUFACTURER'S INSTRUCTIONS
33. NOT USED
34. 22 GA. GALV. METAL THROUGH-WALL SCUPPER, PAINTED
35. PRE-FINISHED METAL CONDUCTOR HEAD 12"X12"X8"D
36. PRE-FINISHED METAL 6" ROUND DOWNSPOUT
37. ACOUSTICAL CEILING TILE, SEE REFLECTED CEILING PLANS AND SECTIONS
38. BOLTS PER MANUFACTURER'S INSTRUCTIONS

SIMMS TOWER STUDIO 850
400 GOLD AVENUE SW
ALBUQUERQUE, NEW MEXICO
87102
TEL 505.243.8100

G. DONALD DUDLEY AIA
ARCHITECT
ARCHITECTURE • INTERIORS • PLANNING
AIA • NCARB • LEED AP

STATE OF NEW MEXICO
G. DONALD DUDLEY, JR.
No. 3673
4/13/2020
REGISTERED ARCHITECT

NEW BUILDING FOR:
RIO RANCHO SENIOR CENTER
CITY OF RIO RANCHO NEW MEXICO

MARK	DATE	DESCRIPTION

GDDA PROJECT NO: 18-137
DATE: 4/13/2020
DRAWN BY: gdd/pb
CHECKED BY: gdd/pb
SET NO:
SHEET TITLE: DETAILS

A504

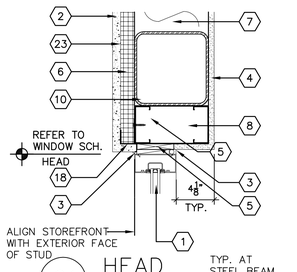

G1 HEAD
TYP. AT STEEL BEAM
1-1/2"=1'-0"

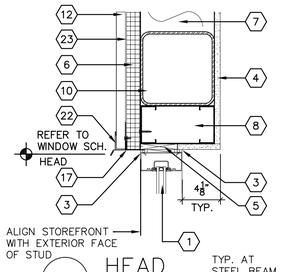

G2 HEAD
TYP. AT STEEL BEAM
1-1/2"=1'-0"

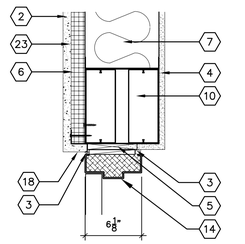

G3 HEAD
1-1/2"=1'-0"

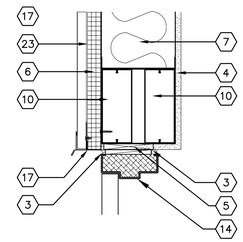

G4 HEAD
1-1/2"=1'-0"

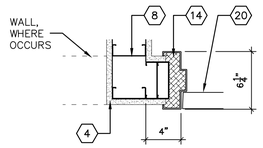

G5 JAMB
1-1/2"=1'-0"

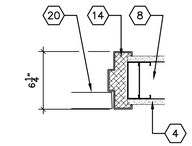

G6 HEAD/JAMB
1-1/2"=1'-0"

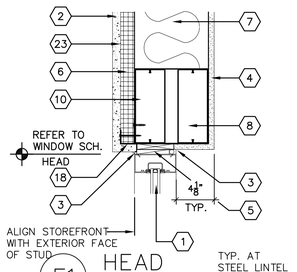

F1 HEAD
TYP. AT STEEL LINTEL
1-1/2"=1'-0"
℄ WALL

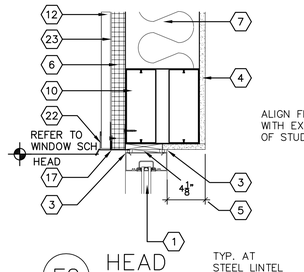

F2 HEAD
TYP. AT STEEL LINTEL
1-1/2"=1'-0"

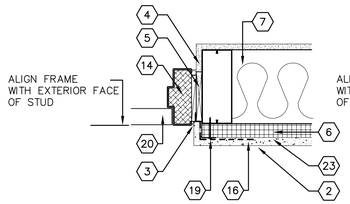

F3 JAMB
1-1/2"=1'-0"

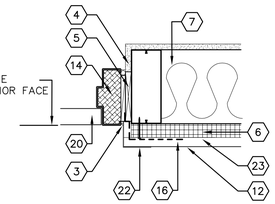

F4 JAMB
1-1/2"=1'-0"

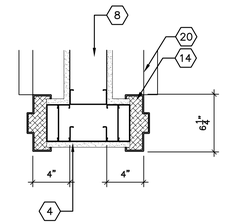

F5 JAMB
1-1/2"=1'-0"

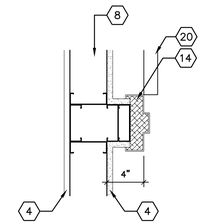

F6 JAMB
1-1/2"=1'-0"

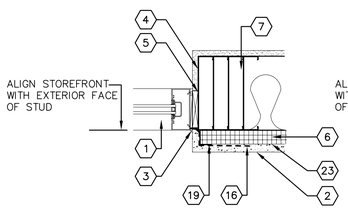

D1 JAMB
1-1/2"=1'-0"

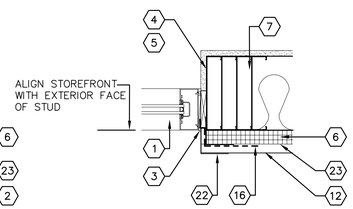

D2 JAMB
1-1/2"=1'-0"

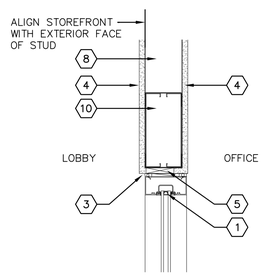

D3 HEAD
1-1/2"=1'-0"

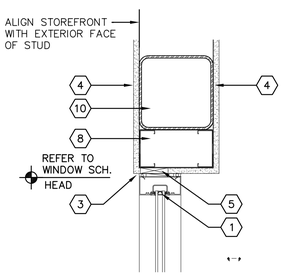

D4 HEAD
1-1/2"=1'-0"

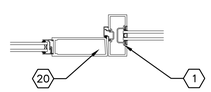

D5 JAMB
1-1/2"=1'-0"

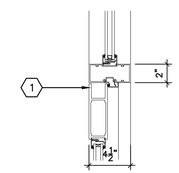

D6 HEAD/TRANSOM
1-1/2"=1'-0"

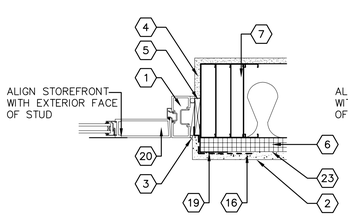

C1 JAMB
1-1/2"=1'-0"

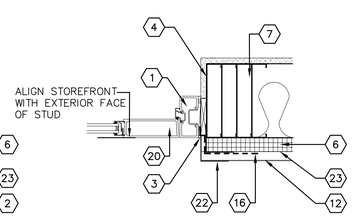

C2 JAMB
1-1/2"=1'-0"

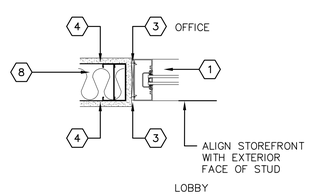

C3 JAMB
1-1/2"=1'-0"

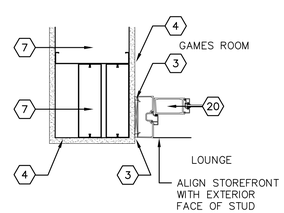

C4 JAMB
1-1/2"=1'-0"

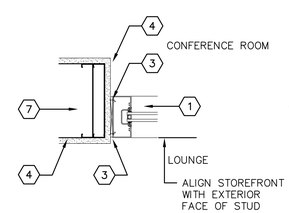

C5 JAMB
1-1/2"=1'-0"

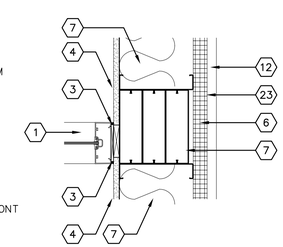

C6 JAMB
1-1/2"=1'-0"

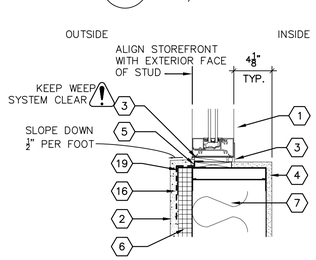

A1 SILL
1-1/2"=1'-0"

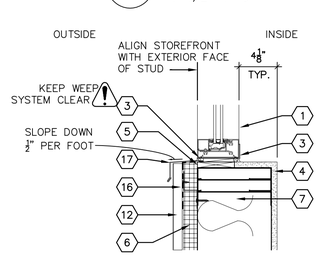

A2 SILL
1-1/2"=1'-0"

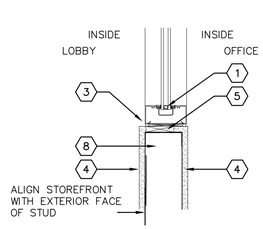

A3 SILL
1-1/2"=1'-0"

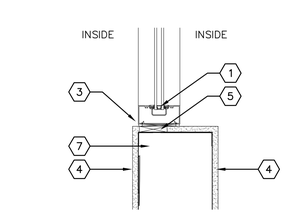

A4 SILL
1-1/2"=1'-0"

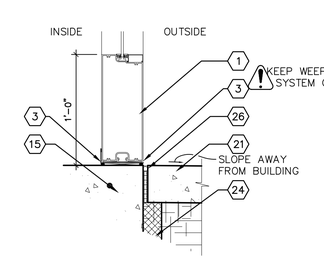

A5 SILL
1-1/2"=1'-0"

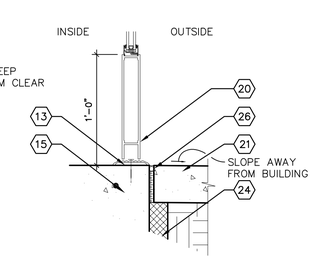

A6 SILL
1-1/2"=1'-0"

GENERAL SHEET NOTES

A. DO NOT SCALE DRAWINGS.
B. CONTRACTOR TO COORDINATE ALL DRAWINGS PRIOR TO CONSTRUCTION.
C. VERIFY EXISTING CONDITIONS IN FIELD. BRING DISCREPANCIES TO THE ATTENTION OF THE ARCHITECT.
D. DIMENSIONS ARE TO GRIDLINE AND FACE OF STUD UNLESS NOTED OTHERWISE.
E. 'FF' INDICATES THAT THE DIMENSION IS A CRITICAL FINISHED DIMENSION MEASURED TO THE FINISHED FACE OF PARTITIONS.
F. SEE SHEET A602 FOR ROOM FINISH SCHEDULE.
G. REFER TO ENLARGED PLANS FOR DIMENSIONS WITHIN THOSE AREAS.
H. SEE SHEET A501 FOR PARTITION / WALL TYPES.
I. SEE REFLECTED CEILING PLANS FOR CEILING HEIGHTS.
J. PROVIDE MOISTURE RESISTANT GYPSUM BOARD AT ALL RESTROOMS AND CUSTODIAL ROOMS.

SHEET KEYNOTES (#)

1. ALUMINUM STOREFRONT AND GLAZING AS SCHEDULED
2. PORTLAND CEMENT PLASTER OVER 17 GA. REINFORCEMENT MESH
3. 1/4" MINIMUM SEALANT, BACKER ROD (EACH SIDE) AND SHIM
4. 5/8" GYPSUM BOARD
5. 5/8" FIRE-TREATED PLYWOOD BLOCKING
6. 1.5" INSULATED SHEATHING
7. 8" METAL STUDS WITH INSULATION. COORDINATE WITH STRUCTURAL, WALL SECTIONS AND WALL TYPES.
8. 4" METAL STUDS WITH INSULATION. COORDINATE WITH WALL TYPES
9. 5/8" EXTERIOR GYPSUM BOARD
10. LIGHT GAGE OR STEEL BEAM LINTEL, REFER TO STRUCTURAL LINTEL SCHEDULE ON SHEET S301.
11. SEALANT, AS REQUIRED
12. PRE-FINISHED METAL WALL PANEL
13. THRESHOLD. REFER TO HARDWARE SCHEDULE IN SPECIFICATIONS
14. HOLLOW METAL DOOR FRAME, FILL WITH EXPANDING FOAM INSULATION
15. CONCRETE SLAB, REFER TO STRUCTURAL
16. BUTYL SEAM TAPE, OVERLAP BUILDING WRAP AND 6" MIN. VERTICAL AT JAMBS
17. PRE-FINISHED METAL DRIP EDGE FLASHING TO MATCH WALL PANEL
18. PLASTER HEAD FLASHING AT EXTERIOR INSULATION
19. 3"X3" 24 GA. GALVANIZED BENT SHEET METAL AT INSULATION CORNERS FOR PLASTER LATH ATTACHMENT.
20. DOOR AS SCHEDULED
21. EXTERIOR CONCRETE SLAB
22. PRE-FINISHED METAL TRIM TO MATCH WALL PANEL PER MANUFACTURER'S INSTRUCTIONS
23. WEATHER-RESISTANT BARRIER
24. 2"XPS RIGID INSULATION BOARD
25. ALUMINUM BRAKE METAL TO MATCH STOREFRONT. APPLY ICE AND WATER SHIELD BETWEEN BRAKE METAL AND SUBSTRATE AS REQUIRED ON EXTERIOR INSTALLATION.
26. 1/2" EXPANSION JOINT WITH SELF LEVELING SEALANT

SIMMS TOWER STUDIO 850
400 GOLD AVENUE SW
ALBUQUERQUE, NEW MEXICO 87102
TEL 505.243.8100

G. DONALD DUDLEY AIA
ARCHITECT
ARCHITECTURE • INTERIORS • PLANNING
AIA • NCARB • LEED AP

STATE OF NEW MEXICO
G. DONALD DUDLEY, JR.
No. 3673
4/13/2020
REGISTERED ARCHITECT

NEW BUILDING FOR:

RIO RANCHO SENIOR CENTER

CITY OF RIO RANCHO
NEW MEXICO

MARK	DATE	DESCRIPTION

GDDA PROJECT NO: 18-137
DATE: 4/13/2020
DRAWN BY: gdd/pb
CHECKED BY: gdd/pb
SET NO:
SHEET TITLE: DETAILS

A510

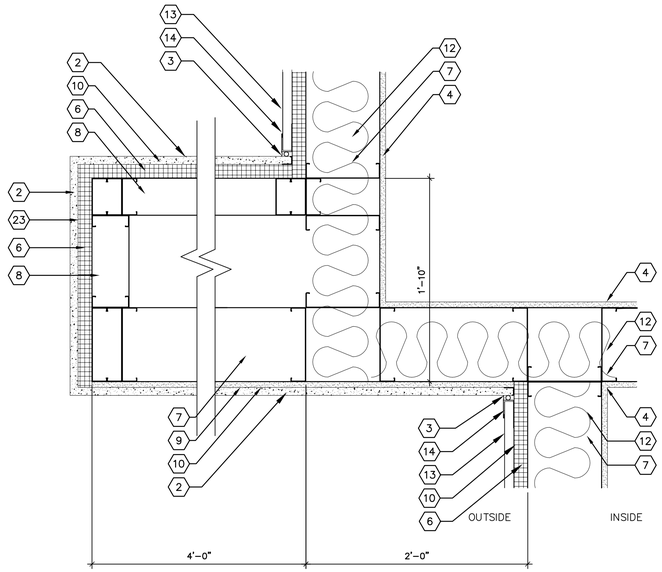

E1 PLAN DETAIL
1-1/2"=1'-0"

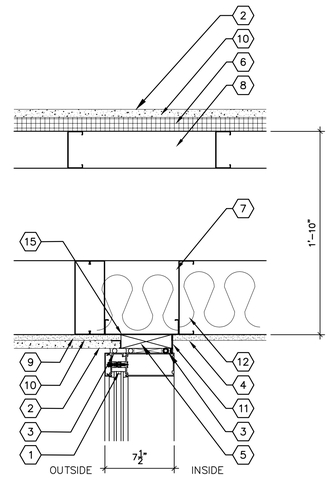

E3 JAMB
1-1/2"=1'-0"

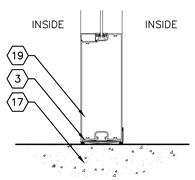

D1 SILL
1-1/2"=1'-0"

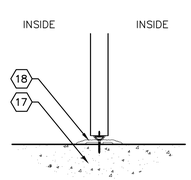

D2 SILL
1-1/2"=1'-0"

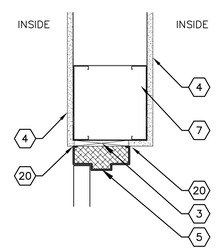

D3 HEAD
1-1/2"=1'-0"

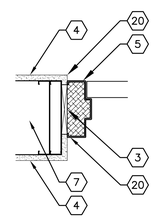

D4 JAMB
1-1/2"=1'-0"

GENERAL SHEET NOTES

A. DO NOT SCALE DRAWINGS.
B. CONTRACTOR TO COORDINATE ALL DRAWINGS PRIOR TO CONSTRUCTION.
C. VERIFY EXISTING CONDITIONS IN FIELD. BRING DISCREPANCIES TO THE ATTENTION OF THE ARCHITECT.
D. DIMENSIONS ARE TO GRIDLINE AND FACE OF STUD UNLESS NOTED OTHERWISE.
E. 'FF' INDICATES THAT THE DIMENSION IS A CRITICAL FINISHED DIMENSION MEASURED TO THE FINISHED FACE OF PARTITIONS.
F. SEE SHEET A602 FOR ROOM FINISH SCHEDULE.
G. REFER TO ENLARGED PLANS FOR DIMENSIONS WITHIN THOSE AREAS.
H. SEE SHEET A501 FOR PARTITION / WALL TYPES.
I. SEE REFLECTED CEILING PLANS FOR CEILING HEIGHTS.
J. PROVIDE MOISTURE RESISTANT GYPSUM BOARD AT ALL RESTROOMS AND CUSTODIAL ROOMS.

SHEET KEYNOTES (#)

1. ALUMINUM CURTAIN WALL SYSTEM AND GLAZING, SEE WINDOW SCHEDULE AND SPECIFICATIONS
2. PORTLAND CEMENT PLASTER OVER 17 GA. REINFORCEMENT MESH
3. 1/4" MINIMUM SEALANT, BACKER ROD (EACH SIDE) AND SHIM
4. 5/8" GYPSUM BOARD
5. 1.5" FIRE-TREATED PLYWOOD BLOCKING
6. 1.5" INSULATED SHEATHING
7. 8" METAL STUDS WITH INSULATION. COORDINATE WITH STRUCTURAL, WALL SECTIONS AND WALL TYPES.
8. 4" METAL STUDS WITH INSULATION. COORDINATE WITH WALL TYPES
9. 5/8" EXTERIOR GYPSUM BOARD
10. WEATHER-RESISTANT BARRIER
11. ALUMINUM BRAKE METAL TO MATCH CURTAIN WALL
12. R-19 FIBERGLASS BATT INSULATION
13. PRE-FINISHED METAL WALL PANEL
14. PRE-FINISHED METAL TRIM TO MATCH WALL PANEL PER MANUFACTURER'S INSTRUCTIONS
15. BUTYL SEAM TAPE, OVERLAP BUILDING WRAP AND 6" MIN. VERTICAL AT JAMB
16. HOLLOW METAL DOOR FRAME, FILL WITH EXPANDING FOAM INSULATION
17. CONCRETE SLAB, SEE STRUCTURAL (AND/OR CIVIL)
18. THRESHOLD, REFER TO HARDWARE SCHEDULE IN SPECIFICATIONS
19. ALUMINUM STOREFRONT WINDOW UNIT, SEE WINDOW SCHEDULE AND SPECIFICATIONS
20. SEALANT AS REQUIRED

G. DONALD DUDLEY AIA
ARCHITECT
ARCHITECTURE • INTERIORS • PLANNING
AIA • NCARB • LEED AP
SIMMS TOWER STUDIO 850
400 GOLD AVENUE SW
ALBUQUERQUE, NEW MEXICO 87102
TEL 505.243.8100

STATE OF NEW MEXICO
G. DONALD DUDLEY, JR.
No. 3673
4/13/2020
REGISTERED ARCHITECT

NEW BUILDING FOR:
RIO RANCHO SENIOR CENTER
CITY OF RIO RANCHO
NEW MEXICO

MARK	DATE	DESCRIPTION

GDDA PROJECT NO: 18-137
DATE: 4/13/2020
DRAWN BY: gdd/pb
CHECKED BY: gdd/pb
SET NO:
SHEET TITLE: DETAILS

A511

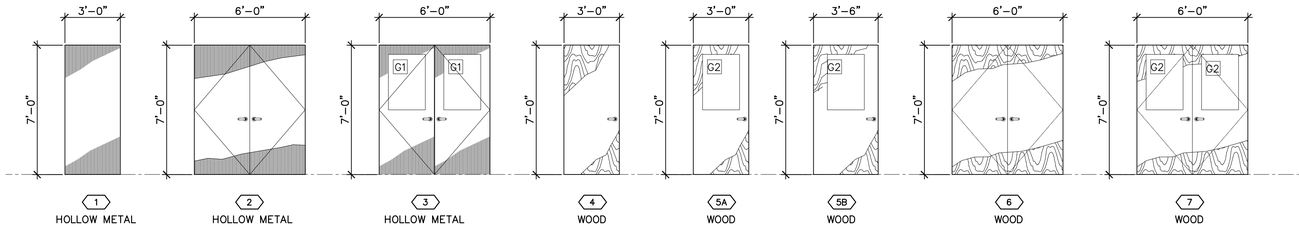

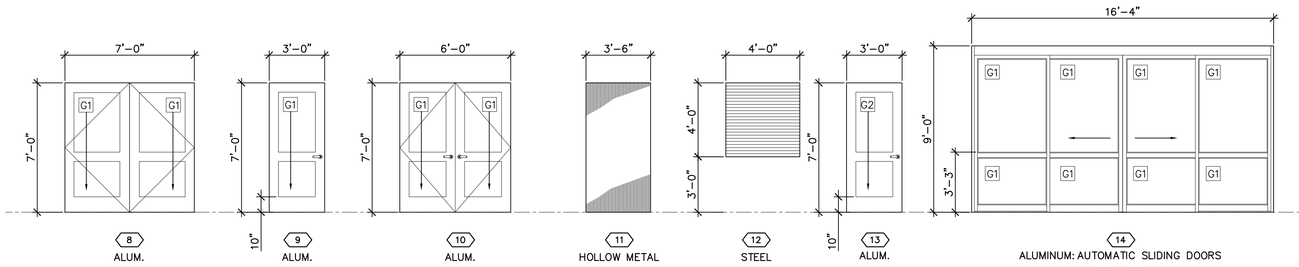

F1 DOOR TYPES
1/4"=1'-0"

GLAZING SCHEDULE

G1	1" EXTERIOR INSULATED GLASS: LOW-E, LAMINATED GLASS OUTSIDE PANE, TEMPERED GLASS INSIDE PANE
G2	1/4" TEMPERED CLEAR GLASS

NOTE:
ALL EXTERIOR GLAZING SHALL BE (CLEAR) SOLARBAN 70, LOW-E.

GLAZING REQUIREMENTS SHALL MEET THE INTERNATIONAL BUILDING CODE 2015.

DOOR SCHEDULE FIRST LEVEL

DOOR #	DOOR SIZE WIDTH	DOOR SIZE HEIGHT	DOOR SIZE THICK	DOOR MATERIAL	DOOR TYPE	DOOR GLAZING	FRAME MATERIAL	FRAME TYPE	FRAME DEPTH	FRAME DETAILS HEAD	FRAME DETAILS JAMB	FRAME DETAILS JAMB	FRAME DETAILS THRESH.	FIRE RATED	REMARKS
100.1	3'-0"	7'-0"	1-3/4"	HM.	1	N/A	HM	HM01	5-1/8"	G4/A510	F4/A510	F4/A510	A6/A510		9
101.1	3'-0"	7'-0"	1-3/4"	HM.	1	N/A	HM	HM01	5-1/8	G4/A510	F4/A510	F4/A510	A6/A510		
102.1	3'-0"	7'-0"	1-3/4"	WOOD	4	N/A	HM	HM01	6-1/4"	G6/A510	F5/A510	G6/A510			2
103.1	3'-0"	7'-0"	1-3/4"	WOOD	4	N/A	HM	HM01	6-1/4"	G6/A510	G6/A510	F5/A510			
104.1	6'-0"	7'-0"	1-3/4"	HM.	3	N/A	HM	HM02	5-1/8"	G4/A510	F4/A510	F4/A510	A6/A510		2, 6
105.1	3'-6"	7'-0"	1-3/4"	HM.	5B	N/A	HM	HM03	6-1/4"	D3/A511	D4/A511	D4/A511			
105.2	4'-0"	4'-0"	1/2"	STEEL	12	N/A	STEEL	ST01	2-3/8"						5, 7
105.3	4'-0"	4'-0"	1/2"	STEEL	12	N/A	STEEL	ST01	2-3/8"						5, 7
105.4	4'-0"	4'-0"	1/2"	STEEL	12	N/A	STEEL	ST01	2-3/8"						5, 7
105.5	3'-6"	7'-0"	1-3/4"	HM.	11	N/A	HM	HM03	5-1/8"	G4/A510	F4/A510	F4/A510	A6/A510		
107.1	7'-0"	7'-0"	2"	ALUM.	8 (14)	G1	ALUM.	AF10	4-1/2"	D6/A510	D5/A510	D5/A510	A6/A510		1, 3, 4
109.1	7'-0"	7'-0"	2"	ALUM.	8 (14)	G1	ALUM.	AF10	4-1/2"	D6/A510	D5/A510	D5/A510	D2/A511		1, 3, 4
109.2	7'-0"	7'-0"	2"	ALUM.	8	G1	ALUM.	AF10	4-1/2"	D6/A510	D5/A510	D5/A510	A6/A510		4
110.1	3'-0"	7'-0"	1-3/4"	WOOD	5A	G2	HM	HM01	6-1/4"	G6/A510	F6/A510	G6/A510			
111.1	3'-0"	7'-0"	2"	ALUM.	13	G2	ALUM.	AF01	4-1/2"	D6/A510	C4/A510	D5/A510			
112.1	3'-0"	7'-0"	2"	ALUM.	13	G2	ALUM.	AF02	4-1/2"	D6/A510	D5/A510	C6/A510			
113.1	3'-0"	7'-0"	1-3/4"	WOOD	4	N/A	HM	HM01	6-1/4"	G6/A510	G6/A510	G5/A510			1, 2
114.1	3'-0"	7'-0"	1-3/4"	WOOD	4	N/A	HM	HM01	6-1/4"	G6/A510	G6/A510	G5/A510			1, 2
115.1	6'-0"	7'-0"	2"	ALUM.	10	G1	ALUM.	AF08	4-1/2"	D6/A510	C2/A510	C2/A510	A6/A510		2, 6
116.1	3'-0"	7'-0"	2"	ALUM.	9	G1	HM	AF05	4-1/2"	D6/A510	C2/A510	D5/A510	A6/A510		2
116.2	3'-0"	7'-0"	1-3/4"	WOOD	5A	G2	HM	HM01	6-1/4"	G6/A510	F6/A510	G6/A510			2
117.1	3'-0"	7'-0"	2"	ALUM.	9	G1	ALUM.	AF06	4-1/2"	D6/A510	C2/A510	D5/A510	A6/A510		2
117.2	3'-0"	7'-0"	1-3/4"	WOOD	5A	G2	HM	HM01	6-1/4"	G6/A510	F5/A510	G6/A510			2
117.3	3'-0"	7'-0"	1-3/4"	WOOD	4	N/A	HM	HM01	6-1/4"	G6/A510	F5/A510	G6/A510			
118.1	3'-0"	7'-0"	1-3/4"	HM.	10	G1	HM	HM02	4-1/2"	G4/A501	F4/A510	F4/A510	A6/A510		2, 6
119.1	6'-0"	7'-0"	1-3/4"	HM.	2	N/A	HM	HM02	4-1/2"	G4/A501	F4/A510	F4/A510	A6/A510		6
119.2	6'-0"	7'-0"	1-3/4"	HM.	2	N/A	HM	HM02	4-1/2"	G4/A501	F4/A510	F4/A510	A6/A510		6
120.1	NOT USED														
120.2	6'-0"	7'-0"	2"	ALUM.	10	G1	ALUM.	AF08	4-1/2"	G1/A510	F1/A510	F1/A510	A6/A510		2, 8
120.3	6'-0"	7'-0"	2"	ALUM.	10	G1	ALUM.	AF08	4-1/2"	G1/A510	F1/A510	F1/A510	A6/A510		2, 8
120.4	6'-0"	7'-0"	1-3/4"	HM.	3	G1	HM	HM02	5-1/8"	G3/A510	F3/A510	F3/A510	A6/A510		2, 8
121.1	3'-0"	7'-0"	1-3/4"	WOOD	4	N/A	HM	HM01	6-1/4"	G6/A510	G6/A510	G5/A510			

DOOR SCHEDULE REMARKS
1. POWER ASSIST OPERATOR (BASE BID)
2. DOOR CLOSER
3. ADDITIVE ALTERNATE #6: SLIDING DOOR UNIT IN PLACE OF HINGED STOREFRONT DOORS
4. GC TO PROVIDE MOTION SENSOR ACTIVATION SYSTEM
5. COILING COUNTER SHUTTER
6. WEATHER STRIPPING AND DOOR SWEEP
7. INCLUDE STAINLESS STEEL JAMBS AND COUNTERTOP
8. PART OF ADDITIVE ALTERNATE #1
9. INCLUDE SIGNAGE STATING "FIRE SPRINKLER RISER ROOM"

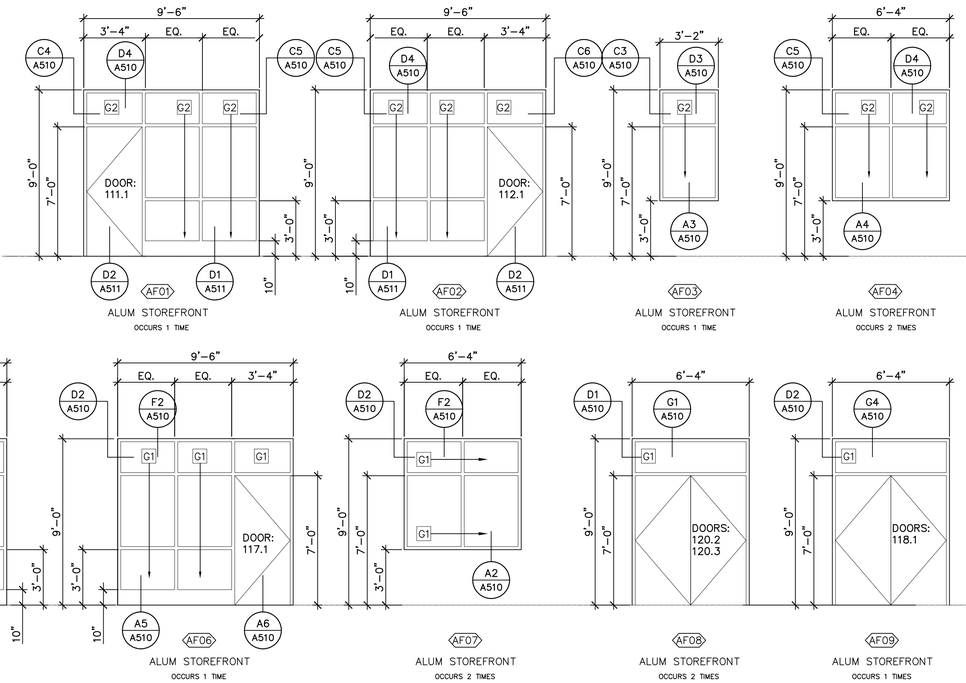

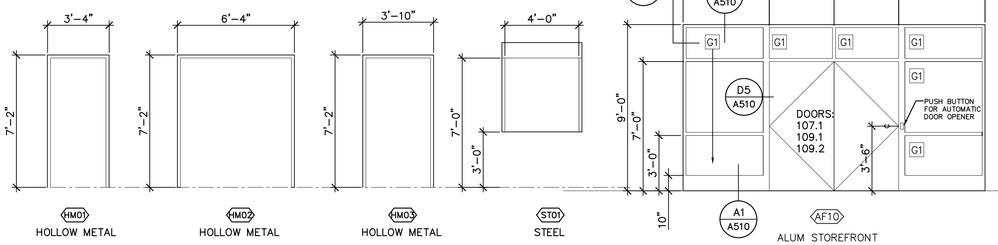

A1 FRAME TYPES
1/4"=1'

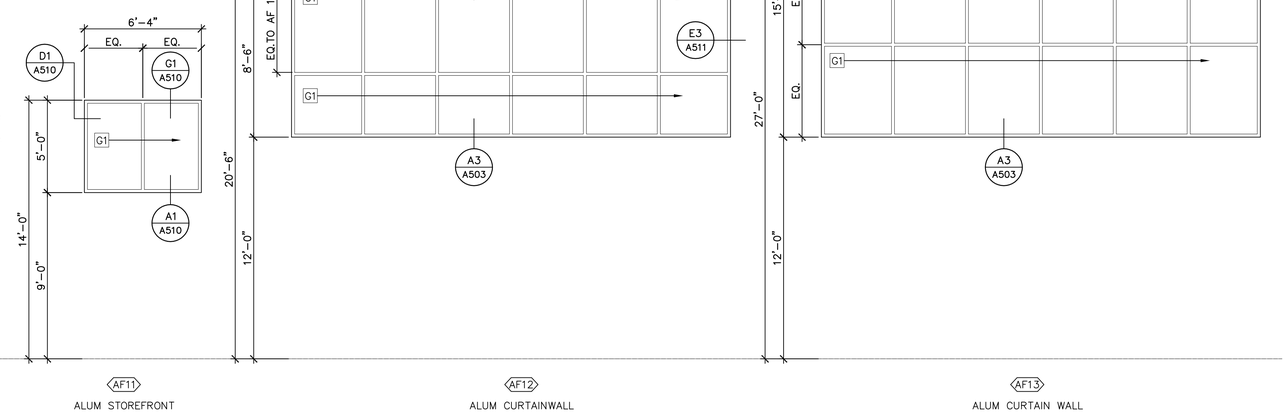

A5 WINDOW TYPES
1/4"=1'-0"

SIMMS TOWER STUDIO 850
400 GOLD AVENUE SW
ALBUQUERQUE, NEW MEXICO
87102
TEL 505.243.8100

G. DONALD DUDLEY AIA
ARCHITECT
ARCHITECTURE • INTERIORS • PLANNING
AIA • NCARB • LEED AP

STATE OF NEW MEXICO
G. DONALD DUDLEY, JR.
No. 3673
4/13/2020
REGISTERED ARCHITECT

NEW BUILDING FOR:
RIO RANCHO SENIOR CENTER
CITY OF RIO RANCHO NEW MEXICO

MARK	DATE	DESCRIPTION

GDDA PROJECT NO: 18-137
DATE: 4/13/2020
DRAWN BY: gdd/pb
CHECKED BY: gdd/pb
SET NO:
SHEET TITLE: DOOR SCHEDULE WINDOW SCHEDULE

A601

ROOM PAINT KEY

ROOM NAME	ROOM NUMBER	WALL COLOR	ACCENT COLOR	SOFFIT/GYP. CEILING	NOTES
MECHANICAL	100	NP	N/A	MM	
ELECTRICAL	101	NP	N/A	MM	
TOILET	102	MM	N/A	MM	
JANITOR	103	MM	N/A	MM	
VESTIBULE	104	MM	N/A	MM	
KITCHEN	105	MM	N/A	MM	
NOT USED	106	N/A	N/A	N/A	
VESTIBULE	107	MM	N/A	MM	
LOUNGE	108	MM	SP-SEE PLAN	MM	
LOBBY	109	MM	N/A	MM	
OFFICE	110	MM	N/A	MM	
GAME ROOM	111	MM	N/A	MM	
CONFERENCE	112	MM	N/A	MM	
MENS	113	MM	N/A	MM	
WOMENS	114	MM	N/A	MM	
HALL	115	MM	N/A	MM	
CLASSROOM A	116	MM	N/A	MM	
CLASSROOM B	117	MM	SA-SEE PLAN	MM	
MECHANICAL	118	MM	N/A	MM	
STORAGE	119	MM	N/A	MM	
MULTIPURPOSE	120	MM	SP-SEE PLAN	MM	
CLOSET	120A	MM	N/A	MM	

PAINT COLOR

MM	Milk Mustache (DE6169)
SP	Soft Pumice (DE3626)
SA	Sour Apple (DE5507)
NP	NO PAINT

GENERAL NOTES

1. ALL PAINT IS TO BE DUNN EDWARDS.

ROOM FINISH SCHEDULE

ROOM NAME	ROOM NUMBER	FLOOR	BASE	WALLS				CEILING		NOTES
				N	S	E	W	MATL	HEIGHT	
MECHANICAL	100	SC	NB	PT	PT	PT	PT	EXP	VARIES	
ELECTRICAL	101	SC	NB	PT	PT	PT	PT	EXP	VARIES	
TOILET	102	CT	CT	CT/PT	CT/PT	CT/PT	CT/PT	PT	10'-0"	
JANITOR	103	SC	CT	FRP	FRP	FRP	FRP	PT	VARIES	
VESTIBULE	104	RSF	RB	PT	PT	PT	PT	PT	10'-0"	2
KITCHEN	105	SC	RB	FRP	FRP	FRP	FRP	ACT	9'-0"	1, 2
NOT USED	106									
VESTIBULE	107	WO	RB	PT	PT	PT	PT	CLD	10'-0"	
LOUNGE	108	RSF	RB	SF	PT	PT	PT	ACT	VARIES	2
LOBBY	109	RSF	RB	PT	PT	PT	PT	ACT	10'-0"	2
OFFICE	110	RSF	RB	PT	PT	PT	PT	ACT	10'-0"	
GAME ROOM	111	RSF	RB	PT	PT/SF	PT	PT	ACT	10'-0"	
CONFERENCE	112	RSF	RB	PT	PT/SF	PT	PT	ACT	10'-0"	
MENS	113	CT	CT	CT/PT	CT/PT	CT/PT	CT/PT	PT	9-0"	2
WOMENS	114	CT	CT	CT/PT	CT/PT	CT/PT	CT/PT	PT	9'-0"	2
HALL	115	RSF	RB	PT	PT	PT	PT	PT/ACT	10'-0"/9'-0"	2
CLASSROOM A	116	RSF	RB	PT	PT	PT	PT	PT	10'-0"	2
CLASSROOM B	117	RSF	RB	PT	PT	PT	PT	ACT	10'-0"	2
STORAGE	118	SC	RB	PT	PT	PT	PT	EXP	10'-0"	
STORAGE	119	SC	RB	PT	PT	PT	PT	PT	10'-0"	
MULTIPURPOSE	120	RSF	RB	PT	PT	PT	PT	PT	VARIES	2
JANITOR	121	RSF	RB	PT	PT	PT	PT	PT	9'-0"	

FINISH NOTES

1. INSTALL MYLAR-COATED CEILING PANELS IN AREAS NOTED.
2. INDICATES SPACES IN WHICH CORNER GUARDS ARE TO BE INSTALLED AT ALL OUTSIDE CORNERS.

FINISH SCHEDULE KEY

SC	SEALED CONCRETE
WO	WALK OFF MAT
SF	STOREFRONT WALL ASSEMBLY
RSF	RESILIENT FLOORING
CT	CERAMIC TILE
RB	RUBBER BASE
NB	NO BASE
PT	PAINTED GYPSUM BOARD
FRP	FIBER REINFORCED PANEL
ACT	LAY-IN ACOUSTICAL CEILING
CLD	ACOUSTICAL CLOUD PANELS.
EXP	EXPOSED
CG	STAINLESS STEEL CORNER GUARD

GENERAL NOTES

1. USE WATER-RESISTANT GYPSUM BOARD AT 0' TO 4' AFF AT CLASSROOM WET AREAS.

G. DONALD DUDLEY AIA
ARCHITECT
ARCHITECTURE • INTERIORS • PLANNING
AIA • NCARB • LEED AP
SIMMS TOWER STUDIO 850
400 GOLD AVENUE SW
ALBUQUERQUE, NEW MEXICO
87102
TEL 505.243.8100

STATE OF NEW MEXICO
G. DONALD DUDLEY, JR.
No. 3673
4/13/2020
REGISTERED ARCHITECT

NEW BUILDING FOR:
RIO RANCHO SENIOR CENTER
CITY OF RIO RANCHO
NEW MEXICO

MARK	DATE	DESCRIPTION

GDDA PROJECT NO: 18-137
DATE: 4/13/2020
DRAWN BY: gdd/pb
CHECKED BY: gdd/pb
SET NO:
SHEET TITLE:
PAINT SCHEDULE
FINISH SCHEDULE

A602

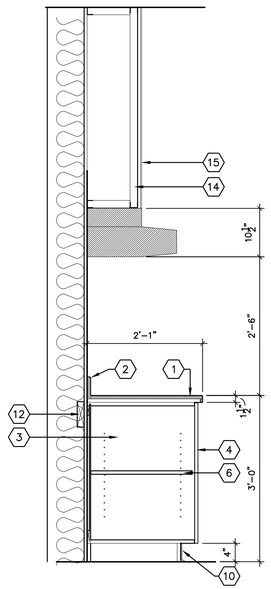

E1 CLASSROOM KITCHEN
3/4"=1'-0"

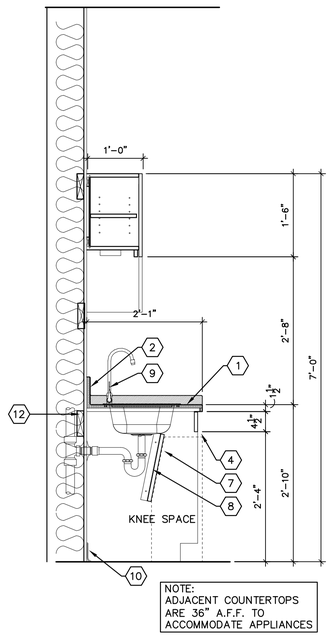

E2 CLASSROOM KITCHEN
3/4"=1'-0"

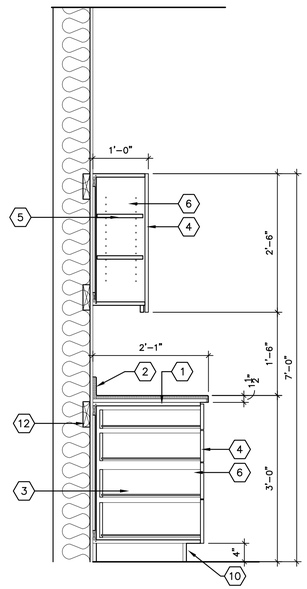

E3 CLASSROOM KITCHEN
3/4"=1'-0"

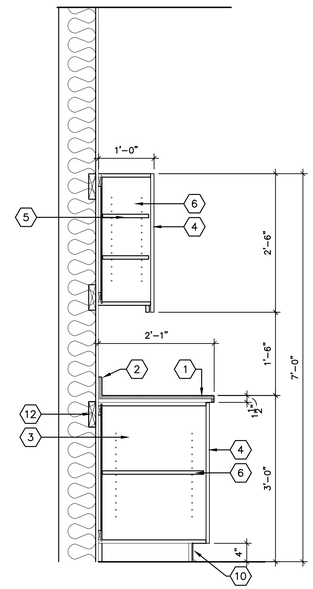

E4 CLASSROOM KITCHEN
3/4"=1'-0"

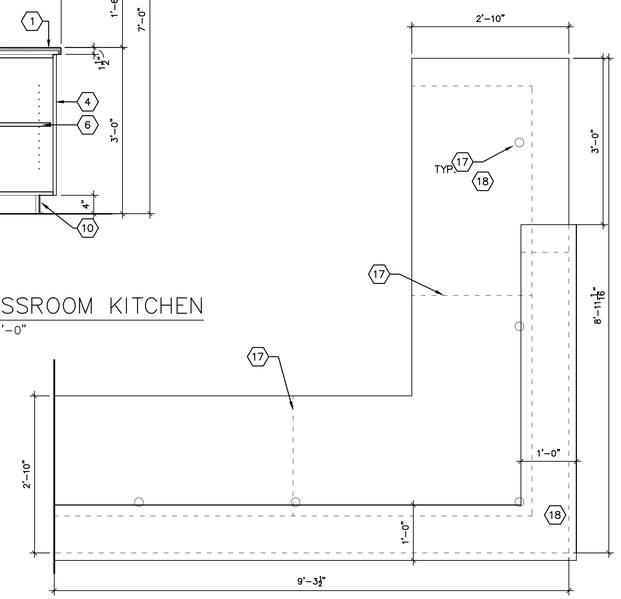

PLAN

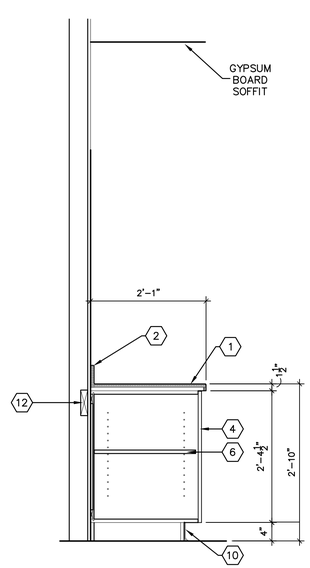

A1 CLASSROOM ART SINK
3/4"=1'-0"

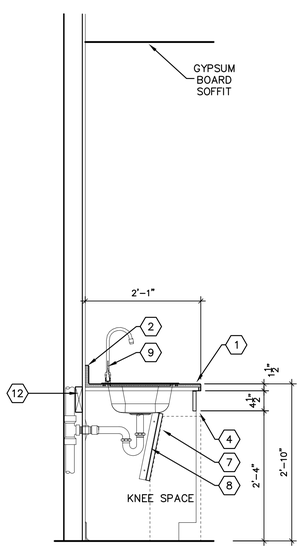

A2 CLASSROOM ART SINK
3/4"=1'-0"

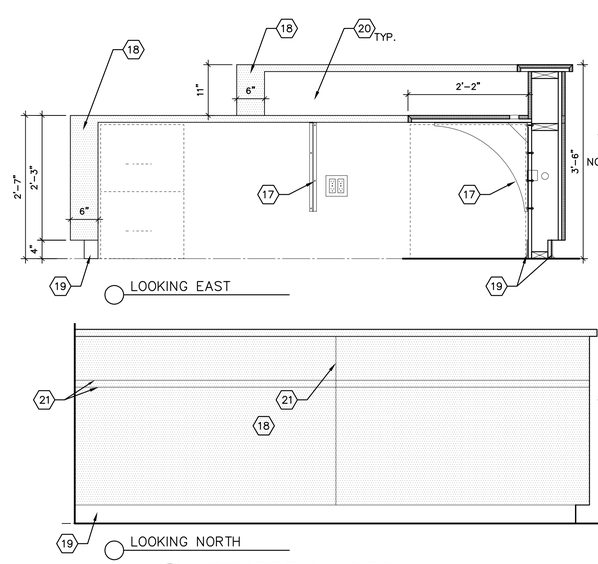

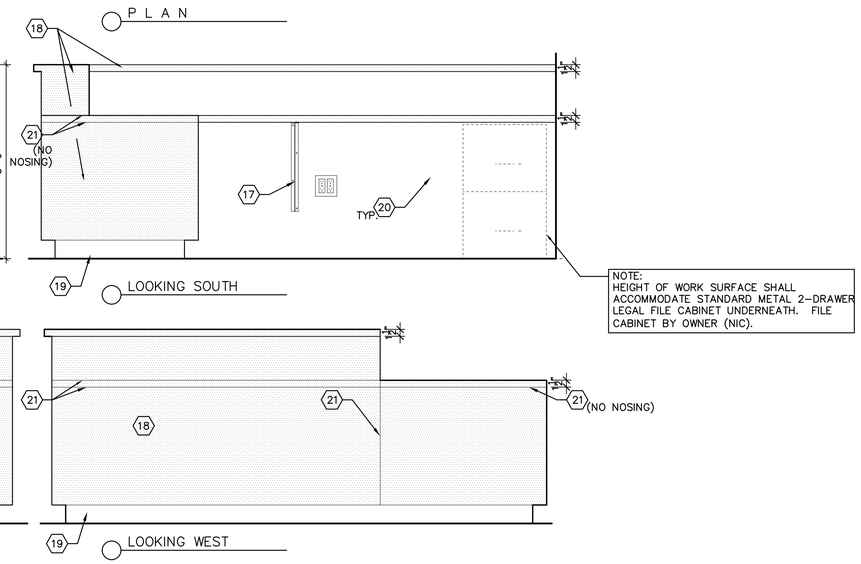

A4 RECEPTION DESK
3/4"=1'-0"

GENERAL SHEET NOTES

A. DO NOT SCALE DRAWINGS.
B. CONTRACTOR TO COORDINATE ALL DRAWINGS PRIOR TO CONSTRUCTION.
C. VERIFY EXISTING CONDITIONS IN FIELD. BRING DISCREPANCIES TO ATTENTION OF ARCHITECT.
D. DIMENSIONS ARE TO STUDS UNLESS OTHERWISE NOTED.
E. 'FF' INDICATES THAT THE DIMENSION IS A CRITICAL FINISHED DIMENSION MEASURED TO THE FINISHED FACE OF PARTITIONS.
F. SEE SHEET G101 FOR PARTITION / WALL TYPES.

SHEET KEYNOTES

1. PLASTIC LAMINATE COUNTERTOP WITH 3MM PVC EDGE BANDING.
2. 4" PLASTIC LAMINATE BACKSPLASH WITH .5MM PVC EDGE BANDING.
3. PLASTIC LAMINATE BASE CABINETS.
4. PLASTIC LAMINATE DOORS/DRAWER FACE WITH 3MM PVC EDGE BANDING.
5. PLASTIC LAMINATE UPPER CABINET.
6. 1" THICK ADJUSTABLE SHELVES WITH .5MM PVC EDGE BANDING.
7. PLASTIC LAMINATE FACE PANEL WITH .5MM PVC EDGE BANDING.
8. 3/16"X 1 1/2" STEEL ANGLE SUPPORT FOR FACE PANEL, EACH SIDE.
9. PLUMBING FIXTURE AS SCHEDULED. SEE PLUMBING SHEETS.
10. 4" COVE BASE.
11. not used
12. PROVIDE BLOCKING AS REQUIRED.
13. PLASTIC LAMINATE FACE PANEL.
14. METAL FRAMING OVER COOKTOP HOOD. REFER TO HOOD MANUFACTURERS INSTALLATION INSTRUCTIONS.
15. STAINLESS STEEL SHROUD TO MATCH HOOD.
16. REFRIGERATOR.
17. STEEL SUPPORT BRACKET
18. PLASTIC LAMINATE SURFACING
19. 4" RUBBER COVE BASE
20. ELECTRICAL OUTLET
21. 1/4"x1/4" REVEAL
22. 2" DIAM. HOLE W/ GROMMET

SIMMS TOWER STUDIO 850
400 GOLD AVENUE SW
ALBUQUERQUE, NEW MEXICO
87102
TEL 505.243.8100

G. DONALD DUDLEY AIA
ARCHITECT
ARCHITECTURE • INTERIORS • PLANNING
AIA • NCARB • LEED AP

STATE OF NEW MEXICO
G. DONALD DUDLEY, JR.
No. 3673
4/13/2020
REGISTERED ARCHITECT

NEW BUILDING FOR:
RIO RANCHO SENIOR CENTER
CITY OF RIO RANCHO
NEW MEXICO

MARK	DATE	DESCRIPTION

GDDA PROJECT NO: 18-137
DATE: 4/13/2020
DRAWN BY: gdd/pb
CHECKED BY: gdd/pb
SET NO:
SHEET TITLE: ARCHITECTURAL CASEWORK

A901

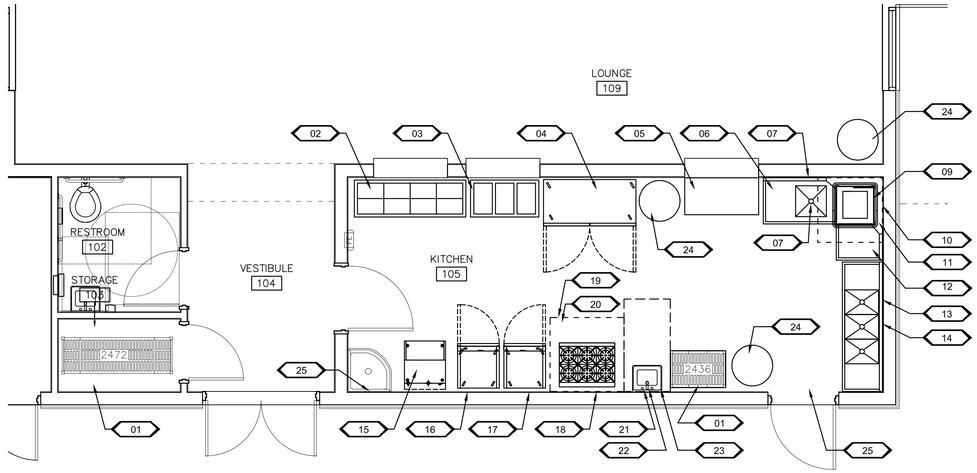

F2 KITCHEN EQUIPMENT PLAN
1/4"=1'-0"

	ITEM NUMBER	ITEM DESCRIPTION	MANUFACTURER AND MODEL NUMBER	QUANTITY	EQUIPMENT FURNISHED GC	EQUIPMENT FURNISHED OWNER	EQUIPMENT INSTALLED GC	EQUIPMENT INSTALLED OWNER	GENERAL REMARKS, ACCESSORIES	PLUMBING WATER HOT	PLUMBING WATER COLD	PLUMBING WASTE	PLUMBING GAS SIZE	PLUMBING GAS BTU	PLUMBING REMARKS	ELECTRICAL (REFERENCE SHEET E-401) VOLT	LOAD H.P.	PHASE	DIRECT CONN.	CORD & PLUG	ELECTRICAL REMARKS	ITEM NUMBER
	01	SHELVING UNITS	METRO SHELVING STAINLESS (NS)	LOT	*		*		SEE PLAN FOR SIZES, 84" POST HEIGHT, (4) CASTERS													01
	02	COLD FOOD SERVE UNIT	DUKE AEROHOT NO. 325	1	*		*															02
	03	HOT FOOD SERVE UNIT	DUKE AEROHOT NO. 303	1	*		*						1/2"	7,500 BTU/Hr	1/2"X36" SUPPLY LINE							03
	04	WORKTOP FREEZER	TRUE TWT-60F-HC	1	*		*									115V				*	60 HZ, 4.8 AMPS, NEMA 5-15P PLUG	04
	05	SS WORK TABLE	ADVANCE TABCO MS-304	1	*		*		FOUR (4) LEGS													05
	06	SS SOILED DISH LANDING TABLE W/ SINK	ADVANCE TABCO DTS-S70-48L	1	*		*		DRAINBOARD SLOPE TO SINKS						SEE #8 FOR FAUCET				*			06
	07	WASTE DISPOSER	SALVAJOR 200-CA-18, ARSS5	1	*		*		SAFETY LINE DISCONNECT, MOUNTED SOLENOID VALVE, FLOW CONTROL SWITCH, PRESSURE SWITCH, MOUNTING BRACKET			1-1/2", INDIRECT				208 V	2	1	*		60 HZ, 12.1 AMPS	07
	08	PRE-RINSE SPRAYER	T&S BRASS B-0133	1	*		*			1/2"	1/2"				BACKFLOW PREVENTER REQUIRED							08
	09	DISH MACHINE	JACKSON TEMPSTAR	1	*		*		76" MINIMUM CLEAR HEIGHT FOR DOOR WHEN OPEN	1/2"		1-1/2", INDIRECT			110 DEG. MIN. HW SUPPLY	208 V		1		*	60 HZ/1 PH; 75.8 A	09
MEP	10	DISHWASHER HOOD	PACIFIC STAINLESS VHC424224F	1	*		*		SEE MECHANICAL PLANS						SEE MECHANICAL PLANS						SEE ELECTRICAL PLANS	10
MEP	11	FAN FOR DISHWASHER HOOD	·	1	*		*		SEE MECHANICAL PLANS						SEE MECHANICAL PLANS						SEE ELECTRICAL PLANS	11
	12	CLEAN DISH LANDING TABLE	ADVANCE TABCO DTC-S70-24L	1	*		*															12
	13	SS (3) COMPARTMENT SINK W/ (2) DRAINBOARDS	ADVANCE TABCO FS-3-1620-18RL	1	*		*		DRAINBOARDS SLOPE TO SINKS	1/2"	1/2"	1½", INDIRECT			SEE #14 FOR FAUCET							13
	14	SWING SPOUT FAUCET	T&S BRASS B-2299	1	*		*			1/2"	1/2"											14
	15	ICE MAKER	SCOTSMAN CU1526MA-1	1	*		*				1/2"	¾", INDIRECT				115 V					7.1 AMPS	15
	16	REACH-IN REFRIGERATOR	TRUE TS-23-HC	1	*		*									115 V				*	60 HZ, 2.2 AMPS, 9' CORD WITH NEMA 5-15P PLUG	16
	17	REACH-IN HEATED CABINET	TRUE TH-23	1	*		*									115 V				*	60 HZ, 7.8 AMPS, 9' CORD W/NEMA 5-15P PLUG	17
	18	HEAVY DUTY GAS RANGE	AMERICAN RANGE AR-6	1	*		*		W/ CASTERS, EXTRA RACK, +/- 5000 ALT.				3/4"	227,000 BTU/Hr	¾"X36" SUPPLY LINE					*	6' 3-PRONG POWER CORD, 67KW	18
MEP	19	EXHAUST HOOD	·	1	*		*		SEE MECHANICAL PLANS						SEE MECHANICAL PLANS						SEE ELECTRICAL PLANS	19
MEP	20	FAN FOR EXHAUST HOOD	·	1	*		*		SEE MECHANICAL PLANS						SEE MECHANICAL PLANS						SEE ELECTRICAL PLANS	20
	21	HAND SINK	ADVANCE TABCO 7-PS-68	1	*		*		RIM HEIGHT: 34" ABOVE FINISH FLOOR	1/2"	1/2"	1½", DIRECT										21
	22	SOAP DISPENSER (N.I.C.)	·	1	*		*															22
	23	PAPER TOWEL DISPENSER (N.I.C.)	·	1	*		*															23
	24	TRASH CAN	RUBBERMAID BRUTE 55 GAL.	3	*		*		KIT WITH DOLLY CART AND LID													24
	25	MOP HOLDER AND HOOKS	BOBRICK B-239	1	*		*			1/2"	1/2"	2", DIRECT			SEE PLUMBING PLANS							25

NOTES:
1) ALL GAS CONNECTIONS TO UTILIZE DORMONT BLUE HOSE.
2) ELECTRICAL SUBCONTRACTOR SHALL MAKE ALL FINAL CONNECTIONS TO KITCHEN EQUIPMENT.

B2 KITCHEN EQUIPMENT SCHEDULE
nts

GENERAL SHEET NOTES

A. DO NOT SCALE DRAWINGS.
B. CONTRACTOR TO COORDINATE ALL DRAWINGS PRIOR TO CONSTRUCTION.
C. VERIFY EXISTING CONDITIONS IN FIELD. BRING DISCREPANCIES TO ATTENTION OF ARCHITECT.
D. DIMENSIONS ARE TO STUDS UNLESS OTHERWISE NOTED.
E. 'FF' INDICATES THAT THE DIMENSION IS A CRITICAL FINISHED DIMENSION MEASURED TO THE FINISHED FACE OF PARTITIONS.
F. PARTITION LOCATIONS, WALL THICKNESS, FURRING, DOOR SIZES AND LOCATIONS AND WALL, CEILING AND FLOOR FINISHES ARE SHOWN ON THE FOOD SERVICE DRAWINGS FOR CONVENIENCE ONLY. REFER TO ARCHITECTURAL DRAWINGS FOR ACTUAL BUILDING CONSTRUCTION, DIMENSIONS AND FINISHES.
G. ALL FABRICATED METAL WORK SHALL BE IN COMPLIANCE WITH THE LATEST EDITION OF NATIONAL SANITATION FOUNDATION.
H. ALL CABINET WORK AND WOOD FIXTURES SHALL COMPLY WITH THE LATEST PUBLISHED STANDARDS OF THE CABINET AND FIXTURES MANUFACTURERS' GUILD.
J. GENERAL CONTRACTOR SHALL INSTALL 12" WIDE PLYWOOD BACKING IN WALLS BEHIND SHEETROCK AS INDICATED ON THE DRAWINGS FOR ANCHORING WALL SHELVES, POT RACKS, ETC.
K. VENTILATION HOODS SHALL COMPLY WITH THE REQUIREMENTS OF THE NATIONAL FIRE PROTECTION ASSOCIATION (NFPA) CODE 96 AND ALL APPLICABLE CODES AND ORDINANCES.
L. THE FOOD SERVICE EQUIPMENT CONTRACTOR SHALL SEAL ALL EQUIPMENT TO WALLS WITH SILICONE CONSTRUCTION SEALANT IN EITHER CLEAR OR APPROVED COLOR TO MATCH SURROUNDING SURFACES.
M. VERIFY ALL DIMENSIONS WITH ACTUAL BUILDING CONDITIONS.
N. ALL WORK SHALL CONFORM TO THE UNIFORM BUILDING CODE, UNIFORM ELECTRICAL CODE, UNIFORM MECHANICAL AND PLUMBING CODES, NEW MEXICO ADMINISTRATIVE CODE TITLE 24, AND ALL LOCAL CODES AND ORDINANCES.
O. ALL FOOD SERVICE EQUIPMENT SHALL MEET AND BE INSTALLED AS PER THE REQUIREMENTS OF THE NEW MEXICO FOOD SERVICE SANITATION ACT - CHAPTER 25, ENVIRONMENTAL IMPROVEMENT AGENCY REGULATIONS GOVERNING FOOD PROTECTION IN FOOD-SERVICE ESTABLISHMENTS AND ALL LOCAL CODES AND ORDINANCES.
P. EQUIPMENT SUPPLIER SHALL PROVIDE EQUIPMENT AS SPECIFIED IN THESE DRAWINGS; OR EQUIPMENT EQUAL TO AND APPROVED (IN WRITING, IN ADVANCE) BY OWNER. ALL EQUIPMENT SHALL BE COMPLIANT WITH NATION SANITATION FOUNDATION (NSF).

SIMMS TOWER STUDIO 850
400 GOLD AVENUE SW
ALBUQUERQUE, NEW MEXICO 87102
TEL 505.243.8100

G. DONALD DUDLEY AIA
ARCHITECT
ARCHITECTURE • INTERIORS • PLANNING
AIA • NCARB • LEED AP

STATE OF NEW MEXICO
G. DONALD DUDLEY, JR.
No. 3673
4/13/2020
REGISTERED ARCHITECT

NEW BUILDING FOR:
RIO RANCHO SENIOR CENTER
CITY OF RIO RANCHO NEW MEXICO

MARK	DATE	DESCRIPTION

GDDA PROJECT NO: 18-137
DATE: 4/13/2020
DRAWN BY: gdd/pb
CHECKED BY: gdd/pb
SET NO:
SHEET TITLE: KITCHEN EQUIPMENT PLAN AND SCHEDULE

Q101

MINIMUM OUTSIDE AIR VENTILATION CALCULATIONS

Single zone
Single Zone

☑ Show simple view

System Name and Number	Condition Analyzed (impacts Ez)	Occupancy Category	Zone Floor Area Az (sq ft)	Are you using default value for zone population?	Zone Population Pz people	Zone Air Distribution Effectiveness Ez	Zone Outdoor Airflow Voz (cfm)	Outdoor air intake flow provided (measured or design) (cfm)
RTU-1 Multipurpose A	Heating	Multi-use assembly	1,269	No	29.00	0.80	283	350
RTU-2 Multipurpose B	Heating	Multi-use assembly	1,269	No	29.00	0.80	283	350
RTU-3 116 117 Classrooms A&B	Heating	Multi-use assembly	899	No	29.00	0.80	339	500
RTU-5 109 Lounge	Heating	Restaurant dining rooms	1,118	No	58.00	0.80	729	800

Multiple zone
RTU-4

☑ Show simple view

System name and number	RTU-4
Condition analyzed (impacts Ez, Vdz, Vpz and Vps)	Heating
All zones are included in the VRP calculation	Yes

Zone Name and Number	Occupancy Category	Zone Floor Area Az (sq ft)	Are you using default value for zone population?	Zone Population Pz (people)	Zone Air Distribution Effectiveness Ez	Zone Outdoor Airflow Voz (cfm)	Zone Discharge Airflow Vdz (cfm)	Zone Primary Airflow Vpz (cfm)	Zone Secondary Recirculation Fraction Er	Zone Primary Air Fraction Ep
107 Vestibule	Corridors	212	No	0.00	0.80	15.90	200	200	0.75	1.00
108 Lobby	Reception areas	224	No	3.00	0.80	35.55	150	150	0.75	1.00
113 Office	Office space	140	No	2.00	0.80	23.00	250	250	0.75	1.00
111 Game Room	Conference / meeting	168	No	12.00	0.80	87.60	300	300	0.75	1.00
112 Conference Room	Conference / meeting	100	No	12.00	0.80	82.50	400	400	0.75	1.00
						0.00				0.00

System area	As	(sq ft)	844
System population	Ps	(people)	28.00
Sum of zone population	sum of Pz	(people)	29.00
Occupant diversity	D		0.96
Uncorrected outdoor air intake	Vou	(cfm)	189.84
System primary airflow (at condition analyzed)	Vps	(cfm)	1,300
Average outdoor air fraction	Xs		0.14

Which method from ASHRAE 62.1 is being used to determine system ventilation efficiency (Ev)?			Appendix A
Ventilation efficiency	Ev		0.85
Outdoor air intake flow (required by 62.1)	Vot	(cfm)	223

Outdoor air intake flow provided (measured or design)	(cfm)	350

Multiple zone
RTU-6

☑ Show simple view

System name and number	RTU-6
Condition analyzed (impacts Ez, Vdz, Vpz and Vps)	Heating
All zones are included in the VRP calculation	Yes

Zone Name and Number	Occupancy Category	Zone Floor Area Az (sq ft)	Are you using default value for zone population?	Zone Population Pz (people)	Zone Air Distribution Effectiveness Ez	Zone Outdoor Airflow Voz (cfm)	Zone Discharge Airflow Vdz (cfm)	Zone Primary Airflow Vpz (cfm)	Zone Secondary Recirculation Fraction Er	Zone Primary Air Fraction Ep
RTU-5 109 Lounge	Restaurant dining rooms	300	Yes	21.00	0.80	264.38	800	800	0.75	1.00
103 Storage	Occupiable storage rooms for dry materia	27	No	0.00	0.80	2.03	50	50	0.75	1.00
104 Vestibule	Corridors	102	No	0.00	0.80	7.65	120	120	0.75	1.00
105 Kitchen	Kitchen (cooking)	175	No	2.00	0.80	45.00	400	400	0.75	1.00
106 Dishwashing	Kitchen (cooking)	159	No	2.00	0.80	42.60	300	300	0.75	1.00

System area	As	(sq ft)	763
System population	Ps	(people)	30.00
Sum of zone population	sum of Pz	(people)	25.00
Occupant diversity	D		1.20
Uncorrected outdoor air intake	Vou	(cfm)	326.82
System primary airflow (at condition analyzed)	Vps	(cfm)	2,000
Average outdoor air fraction	Xs		0.16

Which method from ASHRAE 62.1 is being used to determine system ventilation efficiency (Ev)?			Table 6-3
Ventilation efficiency	Ev		0.82
Outdoor air intake flow (required by 62.1)	Vot	(cfm)	399

Outdoor air intake flow provided (measured or design)	(cfm)	650

MECHANICAL SPECIFICATIONS

1. GENERAL NOTES
   - A. SUBMISSION OF PROPOSAL DIRECTLY OR INDIRECTLY IN CONNECTION WITH THIS WORK SHALL IMPLY THAT THE BIDDER HAS EXAMINED THE JOB SITE UNDER WHICH HE WILL BE OBLIGATED TO OPERATE SHOULD THEY BE AWARDED THE WORK UNDER THIS CONTRACT. NO EXTRA CHARGE WILL BE ALLOWED FOR FAILURE OF ANY BIDDER TO EXAMINE THE SITE PRIOR TO BID.
   - B. CONTRACTOR SHALL VISIT THE SITE AND VERIFY ALL DIMENSIONS IN THE FIELD, AND SHALL ADVISE THE ARCHITECT/ENGINEER OF ANY DISCREPANCIES BEFORE PERFORMING THE WORK.
   - C. ALL EQUIPMENT SHALL BE INSTALLED IN STRICT COMPLIANCE WITH MANUFACTURER'S WRITTEN INSTRUCTIONS. THE CONTRACTOR SHALL PROVIDE ALL HANGERS AND SUPPORTS REQUIRED FOR A COMPLETE INSTALLATION.
   - D. CONTRACTOR SHALL COORDINATE ALL WORK WITH THE OWNER AND ALL OTHER CONTRACTORS.
   - E. CONTRACTOR SHALL PROVIDE LABOR TO RECEIVE, UNLOAD, STORE, PROTECT, AND TRANSFER TO POINT OF INSTALLATION, OWNER FURNISHED ITEMS.
   - F. WHERE CONDUIT, CABLES, DUCTWORK, OR PIPING PASSES THROUGH FIRE RATED FLOORS OR WALLS, THE SLEEVES SHALL BE COMPLETELY SEALED WITH A FIRE STOP MATERIAL BEING SUITABLE FOR THIS SERVICE. THIS MATERIAL SHALL BE INSTALLED IN ACCORDANCE WITH THE REQUIREMENTS OF THE MANUFACTURER TO MAINTAIN THE FIRE RATING OF THE PENETRATED WALL OR FLOOR.
   - G. CONTRACTOR SHALL BE RESPONSIBLE FOR ALL CORING AS IT RELATES TO HIS WORK.
   - H. CONTRACTOR SHALL BE RESPONSIBLE FOR ALL BEAM PENETRATIONS AS IT RELATES TO HIS WORK. CONTRACTOR SHALL SUBMIT SIZE AND LOCATION TO THE STRUCTURAL ENGINEER FOR REVIEW AND DETAIL.
   - I. UPON COMPLETION OF CONSTRUCTION, THE CONTRACTOR SHALL SUPPLY THE ENGINEER WITH (1) COMPLETE SET OF FULL SIZE AS–BUILT DOCUMENTS AND (3) COPIES OF OPERATIONS AND MAINTENANCE MANUALS (SHALL BE OBTAINED AT CONTRACTOR'S EXPENSE.
2. SUMMARY AND SCOPE OF WORK:
   - A. THE DRAWINGS INDICATE DIAGRAMMATICALLY THE EXTENT, GENERAL CHARACTER AND LOCATION OF THE WORK INCLUDED. OFFSETS AND/OR CHANGES IN ELEVATION OF PIPING AND DUCTWORK DUE TO STRUCTURAL OR OTHER INTERFERENCES SHALL BE PROVIDED WITHOUT EXTRA COST.
   - B. CONTRACTOR SHALL VERIFY AND EVALUATE ALL EXISTING CONDITIONS PRIOR TO THE COMMENCEMENT OF WORK.
   - C. PROVIDE ALL LABOR, MATERIALS, AND EQUIPMENT NECESSARY FOR THE INSTALLATION OF COMPLETE AND OPERATING SYSTEMS.
   - D. PROVIDE ONE YEAR GUARANTEE AGAINST DEFECTIVE MATERIALS AND WORKMANSHIP AFTER FINAL ACCEPTANCE BY OWNER.
   - E. ENTIRE DEMOLITION AND NEW WORK INSTALLATION SHALL CONFORM TO ALL APPLICABLE LAWS, CODES, AND REGULATIONS OF MUNICIPAL, STATE AND FEDERAL AUTHORITIES.
   - F. SHOP DRAWINGS: SUBMIT MATERIAL LIST AND SHOP DRAWINGS FOR MAJOR EQUIPMENT TO THE ARCHITECT/ENGINEER FOR APPROVAL.
   - G. THE CONTRACTOR SHALL SECURE ALL PERMITS OR APPLICATIONS AND PAY ANY AND ALL FEES.
   - H. DUCTWORK DEMOLITION AS INDICATED ON DRAWINGS.
   - I. PROVIDE NEW SUPPLY AIR DIFFUSERS, DUCTWORK, DAMPERS, HANGERS, AND SUPPORTS AS SHOWN OR REQUIRED FOR A COMPLETE SYSTEM.
3. MECHANICAL EQUIPMENT AND PIPING IDENTIFICATION
   - A. PROVIDE IDENTIFICATION OF ALL EQUIPMENT, PIPES, AND VALVES.
   - B. IDENTIFICATION DEVICES TO BE USED SHALL INCLUDE THE FOLLOWING:
     - i. PLASTIC PIPE MARKERS
     - ii. VALVE TAGS AND EQUIPMENT TAGS
4. INSULATION
   - A. ALL INSULATION SHALL HAVE A FLAME SPREAD RATING OF 25 OR LESS AND A SMOKE DEVELOPED RATING OF 50 OR LESS IN ACCORDANCE WITH ASTM E84 AND NFPA 90A.
   - C. EXISTING DUCTWORK AND PIPING INSULATION
     - i. ALL EXISTING INSULATION FOR DUCTWORK AND PIPING SYSTEMS PERTAINING TO THIS WORK OR IN THE AREA OF RE–MODEL SHALL BE PATCHED AND/OR REPLACED AS REQUIRED TO MAINTAIN A VAPOR BARRIER.
5. SUPPORTS AND HANGERS
   - A. COMPLY WITH SMACNA
6. TESTING AND BALANCING
   - A. AIR BALANCING AFTER SYSTEM MODIFICATIONS ARE COMPLETE SHALL BE ACCOMPLISHED BY ADJUSTMENT OF ADJUSTABLE FAN SHEAVES. EXISTING BRANCH DAMPERS ARE TO BE USED FOR ANY REQUIRED TRIM ADJUSTMENT.
   - B. UPON COMPLETION OF THE INSTALLATION, THE CONTRACTOR SHALL REPLACE ANY EXISTING PORTION OF THE ASSOCIATED SYSTEM(S) AFFECTED BY THE RENOVATIONS.
   - C. THE CONTRACTOR SHALL PROVIDE ALL LABOR AND EQUIPMENT REQUIRED TO BALANCE ALL AIR SYSTEMS IN ACCORDANCE WITH QUANTITIES SHOWN.
7. AIR DISTRIBUTION SYSTEMS
   - A. AIR TERMINALS
     - i. SUPPLY AIR DIFFUSERS FINISH TO BE STANDARD WHITE COLOR, OR AS DIRECTED BY ARCHITECT. NECK SIZE TO BE AS INDICATED ON DRAWINGS. DIFFUSERS TO FIT 48X24 T–BAR CEILING GRID. SILICONE SEAL AIR TIGHT TO CEILING. DIFFUSERS TO BE FURNISHED WITH OPTIONAL BUTTERFLY DAMPER.
     - ii. RETURN AIR AND EXHAUST AIR REGISTERS FINISH AND COLOR TO BE COORDINATED WITH ARCHITECT. NECK SIZE TO BE AS INDICATED ON DRAWINGS.
     - iii. CONTRACTOR SHALL SPRAY PAINT INSIDE OF DUCT BLACK, BEHIND ALL GRILLES AND REGISTERS.
   - B. SHEET METAL WORK AND DUCTWORK
     - i. EXCEPT AS OTHERWISE SHOWN OR NOTED, ALL DUCTWORK AND OTHER SHEET METAL WORK SHALL BE GALVANIZED SHEET STEEL AND SHALL BE INSTALLED IN ACCORDANCE WITH SHEET METAL AND AIR CONDITIONING CONTRACTORS NATIONAL ASSOCIATION, INC. (SMACNA) DUCT CONSTRUCTION STANDARDS. DUCT SYSTEMS TO BE LOW VELOCITY TYPE.
     - ii. ALL DUCT DIMENSIONS INDICATED ON THE PLANS ARE INSIDE CLEAR DIMENSIONS. DIMENSIONS MAY BE CHANGED SO LONG AS THE NET FREE FACE AREA IS MAINTAINED.
     - iii. ALL SUPPLY AND RETURN DUCTWORK 15 FEET DOWNSTREAM OF THE HVAC UNIT SHALL BE INTERNALLY LINED WITH A ½" ACOUSTICAL DUCT LINER.
     - iv. SUPPLY DUCTWORK TO BE RECTANGULAR WITH HEMMED "S" LONGITUDINAL SEAMS AND DUCTMATE TRANSVERSE JOINTS.
     - v. ALL BRANCH DUCTS SHALL HAVE VOLUME DAMPERS. MANUAL VOLUME DAMPERS: GALVANIZED STEEL PER SMACNA EXCEPT PROVIDE BEARING AT ONE END OF DAMPER ROD AND QUADRANT, WITH LEVER AND LOCKSCREW AT THE OPPOSITE END. FOR INSULATED DUCTS, QUADRANTS MOUNTED ON COLLAR TO CLEAR INSULATION. LEVERS MUST BE ACCESSIBLE.
     - vi. CONTRACTOR SHALL PROVIDE AND INSTALL APPROVED FIRE DAMPERS AND ACCESS PANELS IN ANY AND ALL DUCTWORK WHICH PENETRATES A HORIZONTAL OR VERTICAL FIRE PARTITION, OR AS OTHERWISE SHOWN ON DRAWINGS.
     - vii. SMOOTH TURN RADIUS DUCTWORK OR TURNING VANES SHALL BE USED THROUGHOUT WHERE FLOW EXCEEDS 150 CFM.
     - viii. ALL DUCT JOINTS TO BE SEALED IN ACCORDANCE WITH "SMACNA" STANDARDS AND ACCEPTED GOOD PRACTICE.
     - ix. EXHAUST DUCTWORK ELBOWS TO BE LONG RADIUS TYPE.
     - x. ACCESS DOORS SHALL BE PROVIDED IN DUCTWORK WHEREVER CONTROLS, CONTROL DAMPERS, COILS, AND INSTRUMENTS ARE INSTALLED.
   - C. FLEXIBLE TYPE DUCT
     - xi. FLEXIBLE DUCT IS ONLY ALLOWED IN AREAS WHERE DUCTWORK IS CONCEALED BY A CEILING. REFER TO ARCHITECTURAL REFLECTED CEILING PLAN FOR ALL AREAS WHERE DUCTWORK IS EXPOSED AND VISIBLE TO USER.
     - ii. USE OF FLEXIBLE DUCT SHALL BE LIMITED TO NO MORE THAN 5 LINEAR FEET PER RUN.
     - iii. CONTRACTOR SHALL BE CAREFUL SO AS NOT TO KINK OR COLLAPSE FLEXIBLE DUCT.
8. HVAC CONTROLS AND ELECTRICAL REQUIREMENTS.
   - A. CONTRACTOR TO SUPPLY AND INSTALL ALL CONTROL WIRING AND THERMOSTATS AS REQUIRED.
   - B. CONTRACTOR TO COORDINATE WITH ELECTRICAL CONTRACTOR FOR LOCATION OF WIRING FOR EACH HVAC UNIT AND ASSOCIATED CONTROLS.
   - C. CONTRACTOR SHALL TEST ALL EXISTING DUCT SMOKE DETECTORS FOR PROPER OPERATION AND COMPLIANCE WITH ALL CODES. DETECTORS SHALL DE–ENERGIZE AIR HANDLING UNIT UPON ACTIVATION AND BE CONNECTED TO EXISTING FIRE ALARM SYSTEM.

SHEET LIST

- M001: MECHANICAL LEGEND & SPECIFICATIONS
- M102: MECHANICAL HVAC PLAN & ROOF PLAN – BASE BID
- M101: MECHANICAL HVAC PLAN & ROOF PLAN – ALERNATE
- M501: MECHANICAL DETAILS
- M601: MECHANICAL SCHEDULES

LEGEND

SYMB.	DESCRIPTION	SYMB.	DESCRIPTION
	POINT OF CONNECTION	BD	BALANCING DAMPER
	POINT OF DISCONNECT		FIRE DAMPER
T	THERMOSTAT		SMOKE DAMPER
	SQUARE SUPPLY DIFFUSER		SUPPLY AIR DUCT UP
	ROUND SUPPLY DIFFUSER		SUPPLY AIR DUCT DOWN
	RETURN GRILLE		RETURN/EXHAUST DUCT UP
	EXHAUST GRILLE		RETURN/EXHAUST DUCT DOWN
	SIDEWALL SUPPLY	8"x10"	DUCTWORK DIMENSIONS (WxH)
	SIDEWALL RETURN	8"ø	DUCTWORK DIMENSIONS (DIA.)
	SIDEWALL EXHAUST	RTU #	EQUIPMENT DESIGNATION
	SUPPLY AIR ARROW	S1 100cfm 8"ø	DIFFUSER/GRILLE DESIGNATION
	RETURN AIR ARROW		RISER UP
	EXHAUST AIR ARROW		RISER UP
	DUCTWORK– DEMO		RISER DOWN
	DUCTWORK– EXISTING		RISER DROP
	DUCTWORK– NEW		BRANCH– TOP CONNECTION
8"ø	DUCTWORK– ROUND		BRANCH– BOTTOM CONNECTION
8"x10"	DUCTWORK– RIGID		BRANCH– SIDE CONNECTION
	DUCT TRANSITION		CAP ON END OF PIPE
	DUCT SQUARE TO ROUND TRANSITION	GAS	GAS– LOW PRESSURE
	METERED ELBOW		

ABBREVIATIONS

ABBR.	DESCRIPTION	ABBR.	DESCRIPTION
AFF	ABOVE FINISHED FLOOR	NOM	NOMINAL
DIA	DIAMETER	OA	OUTSIDE AIR
(E)	EXISTING	OAT	OUTSIDE AIR TEMPERATURE
EAT	ENTERING AIR TEMPERATURE	OC	ON CENTER
EXP	EXPANSION	PH	PHASE
FPM	FEET PER MINUTE	POC	POINT OF CONNECTION
FPS	FEET PER SECOND	PRESS	PRESSURE
HP	HORSEPOWER	RA	RETURN AIR
HZ	HERTZ	RH	RELATIVE HUMIDITY
IPS	INCHES PER SECOND	SA	SUPPLY AIR
KW	KILOWATTS	SAT	SUPPLY AIR TEMPERATURE
LAT	LEAVING AIR TEMPERATURE	SENS	SENSIBLE COOLING CAPACITY
LBS	POUNDS	SP	STATIC PRESSURE
LWT	LEAVING WATER TEMPERATURE	TEMP	TEMPERATURE
MBH	THOUSAND BTU'S PER HOUR	TON	REFRIGERATION CAPACITY (1 TON=12,000 BTUH)
(N)	NEW	TSP	TOTAL STATIC PRESSURE
N.I.C.	NOT IN CONTRACT	TYP	TYPICAL
		V	VOLTAGE
		VTR	VENT THROUGH ROOF

EEA CONSULTING ENGINEERS
4343 Pan American Freeway NE, Suite 239
Albuquerque, NM 87107
Main: 505.877.4499 - www.eeace.com
Project #: 2019MEP-25

G. DONALD DUDLEY AIA
ARCHITECT
ARCHITECTURE • INTERIORS • PLANNING
AIA • NCARB • LEED AP
SIMMS TOWER STUDIO 850
400 GOLD AVENUE SW
ALBUQUERQUE, NEW MEXICO
87102
TEL 505.243.8100

COLIN L EVANS
NEW MEXICO
21314
PROFESSIONAL ENGINEER
04/13/2020

NEW BUILDING FOR:
RIO RANCHO SENIOR CENTER
CITY OF RIO RANCHO
NEW MEXICO

MARK	DATE	DESCRIPTION

GDDA PROJECT NO: 18–137
DATE: 04/13/2020
DRAWN BY: PU
CHECKED BY: CE
SET NO:
SHEET TITLE: MECHANICAL LEGENDS & SPECS

M001

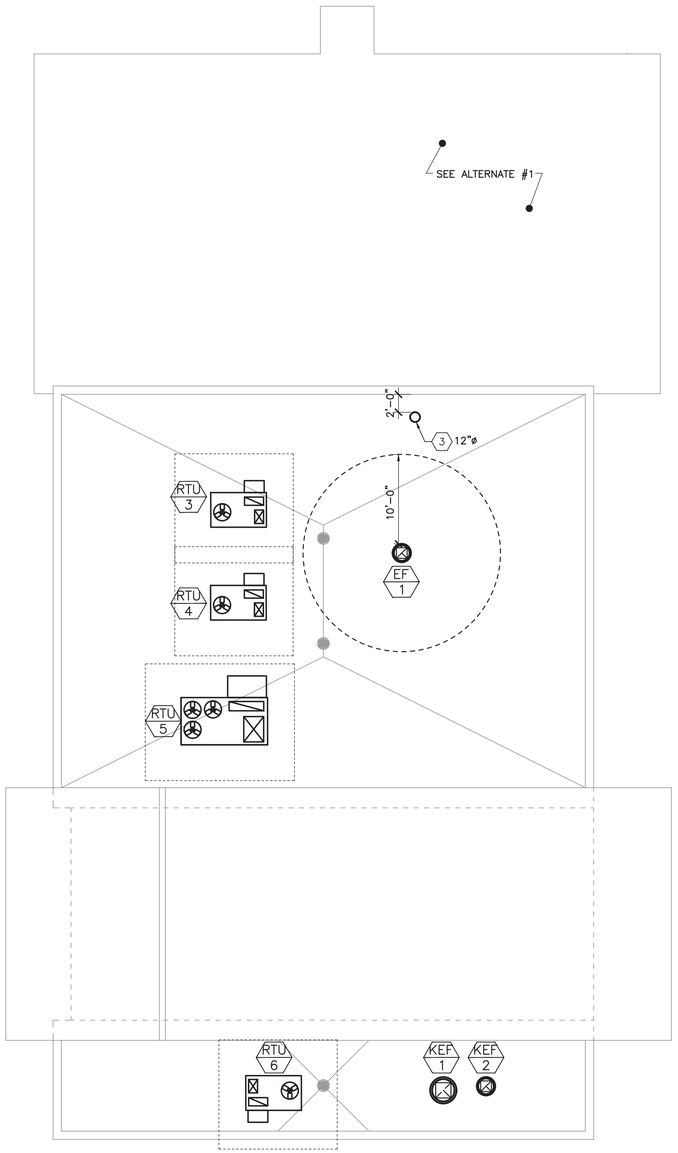

A1 MECHANICAL ROOF PLAN – BASE BID
1/8"=1'-0"

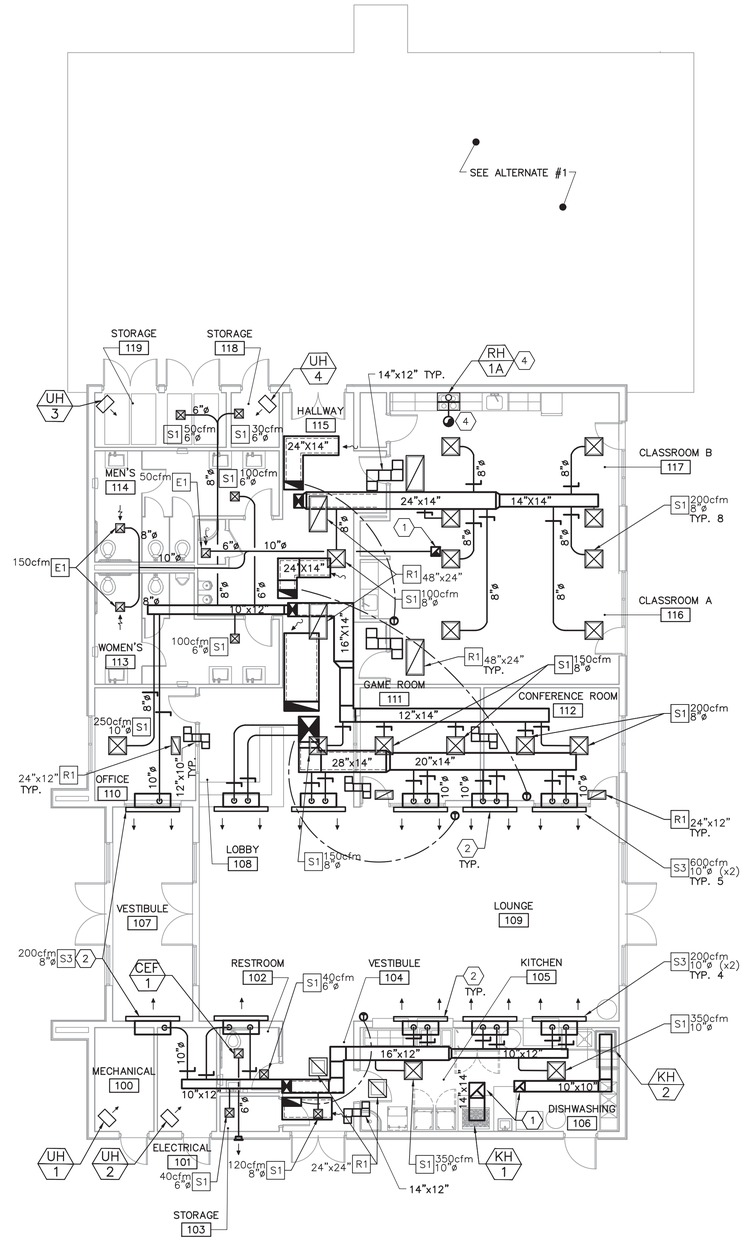

A5 MECHANICAL HVAC PLAN – BASE BID
1/8"=1'-0"

GENERAL SHEET NOTES

A. COORDINATE EQUIPMENT, DUCTWORK, AND PIPING INSTALLATION WITH STRUCTURAL PLANS, ARCHITECTURAL PLANS, PLUMBING PLANS, FIRE PROTECTION PLANS, AND ELECTRICAL PLANS. PAY ATTENTION TO ELEVATIONS OF STRUCTURAL ELEMENTS, CEILING HEIGHTS, CABLE TRAYS, ROOF DRAIN LEADERS, FIRE PROTECTION MAINS, ETC.

B. DUCT SIZES ARE SHEET METAL DIMENSIONS. INSULATION IN ADDITION TO SIZES SHOWN, AND DUCT LINER THICKNESS HAS BEEN ACCOUNTED FOR WHERE REQUIRED AND SHOWN.

C. PROVIDE AND INSTALL 1" ACOUSTIC DUCT LINER ON SUPPLY AND RETURN DUCTWORK WITHIN 15 FEET OF AIR HANDLER UNITS.

D. COORDINATE LOCATION OF DIFFUSERS, GRILLES, AND REGISTERS WITH ARCHITECTURAL REFLECTED CEILING PLANS.

E. REFER TO DIAGRAMS SHEET FOR DIFFUSER AND REGISTER CONNECTIONS. PROVIDE MANUAL BALANCING DAMPER FOR EACH CONNECTION.

F. REFER TO DIAGRAMS SHEET FOR SIDEWALL REGISTER INSTALLATION.

G. PROVIDE AND INSTALL LOCKING COVER BOX FOR THERMOSTATS INSTALLED IN SHARED AREAS (CORRIDORS, LOBBIES, ETC.)

H. INSTALL TRANSFER AIR DUCTS AND TRANSFER AIR OPENINGS ABOVE CEILING LEVEL FOR A COMPLETE RETURN AIR PATH FOR EACH ROOM AND SYSTEM. SIZE AS SHOWN ON PLANS. REFER TO DIAGRAMS.

I. PAINT EXPOSED DUCTWORK PER ARCHITECTURAL SPECIFICATIONS.

J. PROVIDE TURNING VANES IN RECTANGULAR TEES AND MITERED ELBOWS, UNLESS INDICATED OTHERWISE.

K. COORDINATE REQUIRED WALL AND ROOF PENETRATION SIZES WITH OTHER TRADES.

L. REFER TO SHEET M501 FOR DIAGRAMS.

KEYNOTES

1. UP TO EXHAUST FAN ON ROOF.
2. SIDEWALL LINEAR SLOT DIFFUSER.
3. 12'ø EXHAUST DUCT UP THROUGH ROOF WITH RAIN CAP, FAN IN CEILING SPACE.
4. BID ALTERNATE RANGE HOOD. INSTALL HOOD WITH DUCT THROUGH ROOF. REMOTE EXHAUST FAN IN CEILING SPACE.

EEA CONSULTING ENGINEERS
4343 Pan American Freeway NE, Suite 239
Albuquerque, NM 87107
Main: 505.877.4499 - www.eeace.com
Project #: 2019MEP-25

G. DONALD DUDLEY AIA
ARCHITECT
ARCHITECTURE • INTERIORS • PLANNING
AIA • NCARB • LEED AP
SIMMS TOWER STUDIO 850
400 GOLD AVENUE SW
ALBUQUERQUE, NEW MEXICO
87102
TEL 505.243.8100

COLIN L. EVANS
NEW MEXICO
21314
PROFESSIONAL ENGINEER
04/13/2020

NEW BUILDING FOR:
RIO RANCHO SENIOR CENTER
CITY OF RIO RANCHO
NEW MEXICO

MARK	DATE	DESCRIPTION

GDDA PROJECT NO: 18–137
DATE: 04/13/2020
DRAWN BY: PU
CHECKED BY: CE
SET NO:
SHEET TITLE: MECHANICAL ROOF & FLOOR PLAN – BASE BID

M101

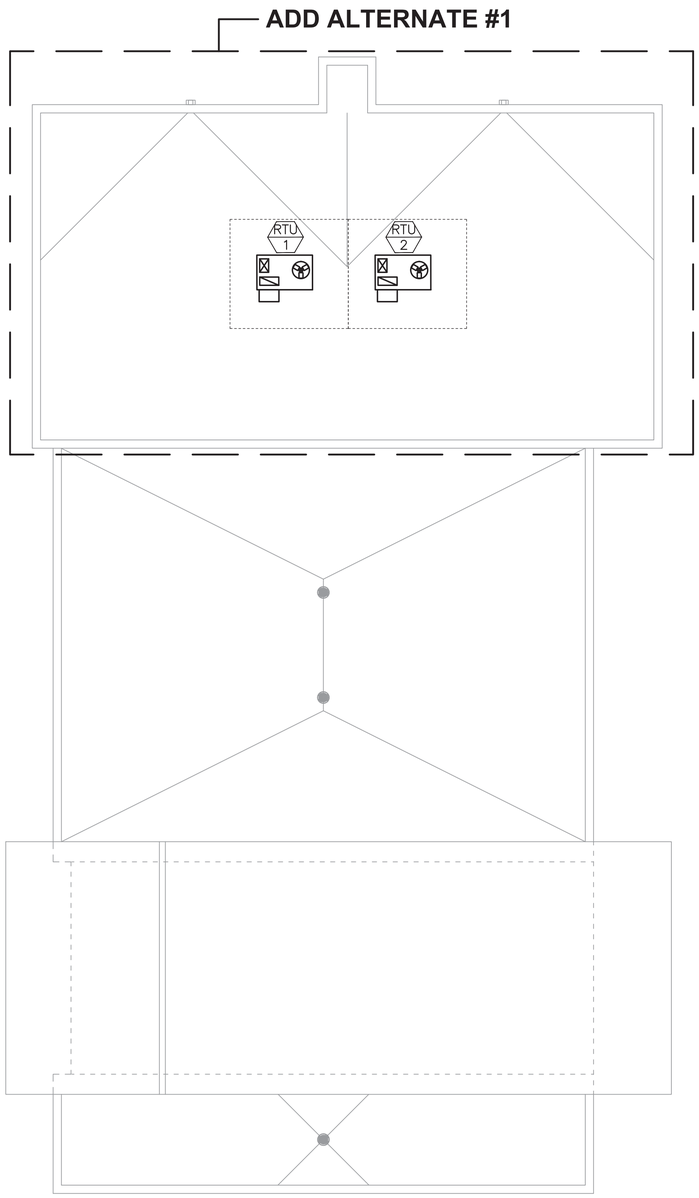

A1 MECHANICAL ROOF PLAN – ADD ALTERNATE #1
1/8"=1'-0"

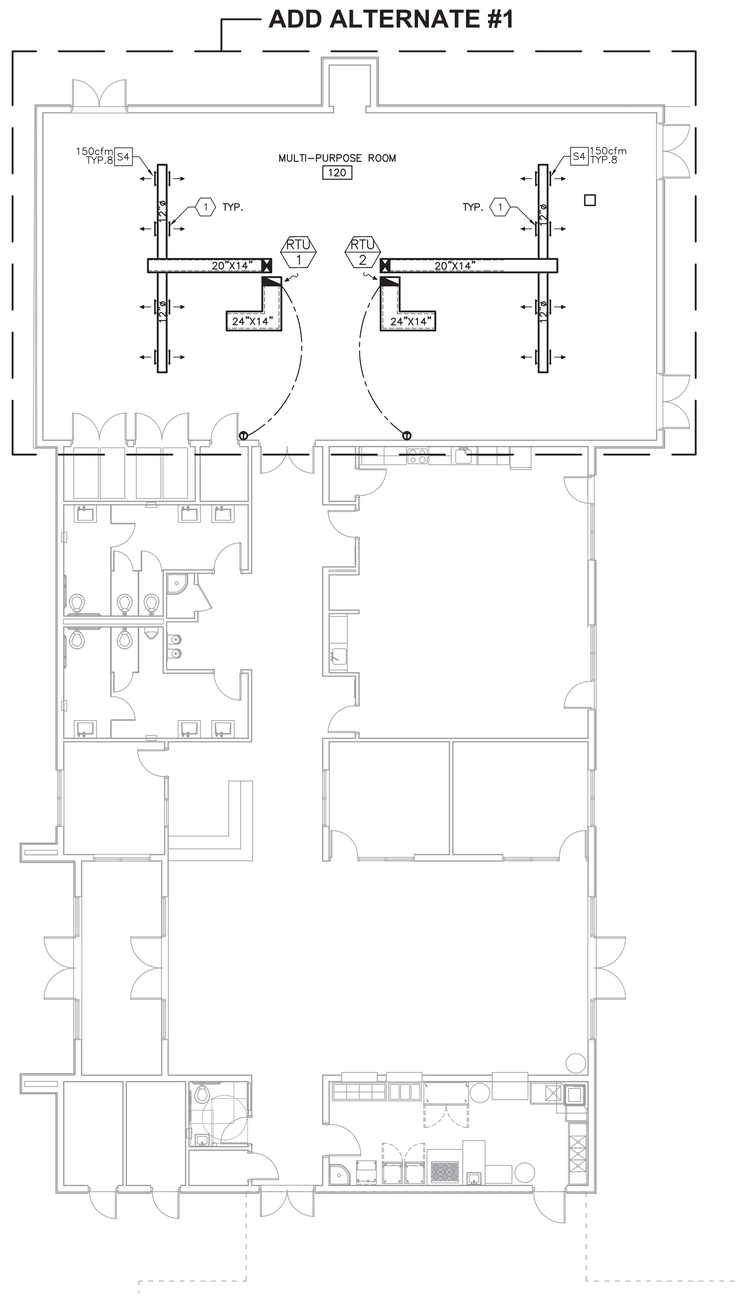

A5 MECHANICAL HVAC PLAN – ADD ALTERNATE #1
1/8"=1'-0"

GENERAL SHEET NOTES

A. COORDINATE EQUIPMENT, DUCTWORK, AND PIPING INSTALLATION WITH STRUCTURAL PLANS, ARCHITECTURAL PLANS, PLUMBING PLANS, FIRE PROTECTION PLANS, AND ELECTRICAL PLANS. PAY ATTENTION TO ELEVATIONS OF STRUCTURAL ELEMENTS, CEILING HEIGHTS, CABLE TRAYS, ROOF DRAIN LEADERS, FIRE PROTECTION MAINS, ETC.

B. DUCT SIZES ARE SHEET METAL DIMENSIONS. INSULATION IN ADDITION TO SIZES SHOWN, AND DUCT LINER THICKNESS HAS BEEN ACCOUNTED FOR WHERE REQUIRED AND SHOWN.

C. PROVIDE AND INSTALL 1" ACOUSTIC DUCT LINER ON SUPPLY AND RETURN DUCTWORK WITHIN 15 FEET OF AIR HANDLER UNITS.

D. COORDINATE LOCATION OF DIFFUSERS, GRILLES, AND REGISTERS WITH ARCHITECTURAL REFLECTED CEILING PLANS.

E. REFER TO DIAGRAMS SHEET FOR DIFFUSER AND REGISTER CONNECTIONS. PROVIDE MANUAL BALANCING DAMPER FOR EACH CONNECTION.

F. REFER TO DIAGRAMS SHEET FOR SIDEWALL REGISTER INSTALLATION.

G. PROVIDE AND INSTALL LOCKING COVER BOX FOR THERMOSTATS INSTALLED IN SHARED AREAS (CORRIDORS, LOBBIES, ETC.)

H. INSTALL TRANSFER AIR DUCTS AND TRANSFER AIR OPENINGS ABOVE CEILING LEVEL FOR A COMPLETE RETURN AIR PATH FOR EACH ROOM AND SYSTEM. SIZE AS SHOWN ON PLANS. REFER TO DIAGRAMS.

I. PAINT EXPOSED DUCTWORK PER ARCHITECTURAL SPECIFICATIONS.

J. PROVIDE TURNING VANES IN RECTANGULAR TEES AND MITERED ELBOWS, UNLESS INDICATED OTHERWISE.

K. COORDINATE REQUIRED WALL AND ROOF PENETRATION SIZES WITH OTHER TRADES.

L. REFER TO SHEET M501 FOR DIAGRAMS.

KEYNOTES

1. DUCT MOUNTED DIFFUSER WITH FACE OPERABLE DAMPER.

EEA CONSULTING ENGINEERS
4343 Pan American Freeway NE, Suite 239
Albuquerque, NM 87107
Main: 505.877.4499 - www.eeace.com
Project #: 2019MEP-25

G. DONALD DUDLEY AIA
ARCHITECT
ARCHITECTURE • INTERIORS • PLANNING
AIA • NCARB • LEED AP
SIMMS TOWER STUDIO 850
400 GOLD AVENUE SW
ALBUQUERQUE, NEW MEXICO
87102
TEL 505.243.8100

COLIN L. EVANS
NEW MEXICO
21314
PROFESSIONAL ENGINEER
04/13/2020

NEW BUILDING FOR:
RIO RANCHO
SENIOR CENTER
CITY OF RIO RANCHO
NEW MEXICO

MARK	DATE	DESCRIPTION

GDDA PROJECT NO: 18–137
DATE: 04/13/2020
DRAWN BY: PU
CHECKED BY: CE
SET NO:
SHEET TITLE: MECHANICAL ROOF & FLOOR PLAN – ALTERNATE

M102

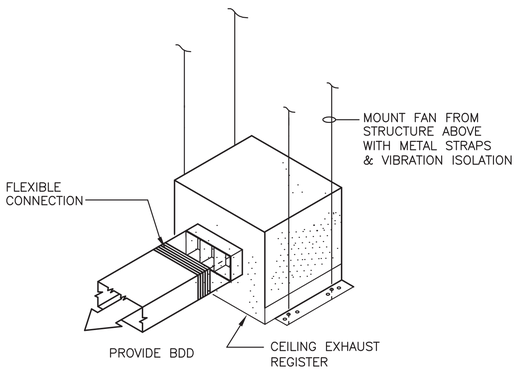

CEILING EXHAUST FAN DETAIL

NOT TO SCALE

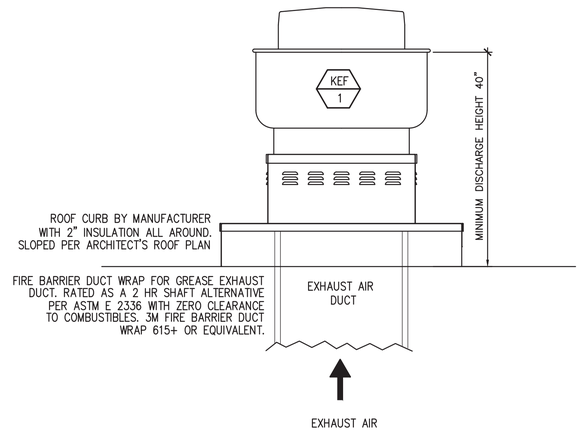

GREASE EXHAUST FAN

NOT TO SCALE

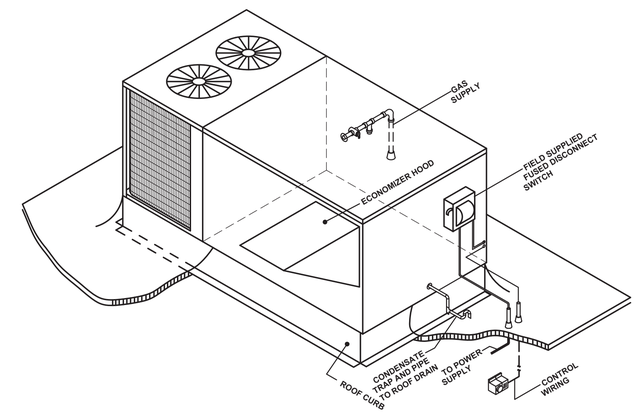

ROOFTOP PACKAGED HVAC UNIT DIAGRAM

NOT TO SCALE

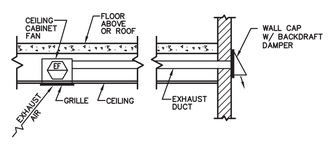

BATHROOM EXHAUST FAN DETAIL – SIDEWALL DISCHARGE

N.T.S.

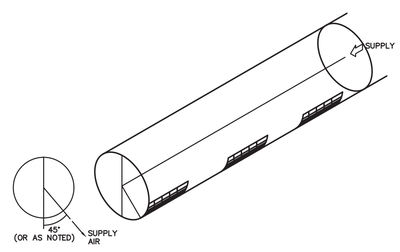

DUCT MOUNTED SUPPLY AIR GRILLE

NOT TO SCALE

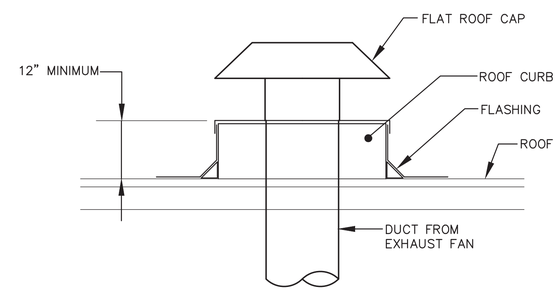

FLAT ROOF CAP DETAIL

NOT TO SCALE

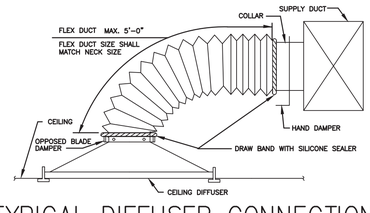

TYPICAL DIFFUSER CONNECTION

(SIDE OF DUCT CONNECTION)
NOT TO SCALE

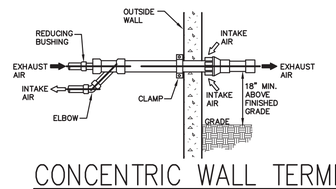

CONCENTRIC WALL TERMINATION INSTALLATION DETAIL

N.T.S.

(TYPICAL FOR HIGH EFFICIENCY GAS FURNACE AND WATER HEATER)

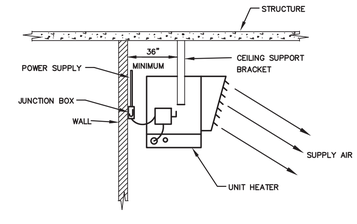

UNIT HEATER MOUNTING DIAGRAM

N.T.S.

EEA CONSULTING ENGINEERS
4343 Pan American Freeway NE, Suite 239
Albuquerque, NM 87107
Main: 505.877.4499 - www.eeace.com
Project #: 2019MEP-25

G. DONALD DUDLEY AIA
ARCHITECT
ARCHITECTURE • INTERIORS • PLANNING
AIA • NCARB • LEED AP
SIMMS TOWER STUDIO 850
400 GOLD AVENUE SW
ALBUQUERQUE, NEW MEXICO
87102
TEL 505.243.8100

COLIN L. EVANS
NEW MEXICO
21314
PROFESSIONAL ENGINEER
04/13/2020

NEW BUILDING FOR:
RIO RANCHO SENIOR CENTER
CITY OF RIO RANCHO
NEW MEXICO

MARK	DATE	DESCRIPTION

GDDA PROJECT NO: 18–137
DATE: 04/13/2020
DRAWN BY: PU
CHECKED BY: CE
SET NO:
SHEET TITLE: MECHANICAL DIAGRAMS

M501

ROOFTOP UNIT SCHEDULE

RTU #

EQUIPMENT NO.	AREA SERVED	SUPPLY AIR (CFM)	OUTSIDE AIR (CFM)	E.S.P. (IN. W.G.)	COOLING				HEATING				FILTERS	ELECTRICAL			MANUFACTURER & MODEL:	ECONOMIZER & POWER EXHAUST	OPTIONS/ACCESSORIES:
					NOM. TONS	SENSIBLE (MBH)	LAT (F)	EFFICIENCY EER/SEER	INPUT (MBH)	OUTPUT (MBH)	LAT (F)	EFF AFUE		V.-PH.-CY.	MCA	MOP			
1	MULTI-PURPOSE ROOM 120	1200	350	0.5	3	28	55	12.9/15	115	89	95	81%	2" PLTD.	208-3-60	23	30	CARRIER 48HCFA04	ECONOMIZER INCLUDED	HAIL GUARDS, FULL ECONOMIZER AND DISCONNECT
2	MULTI-PURPOSE ROOM 120	1200	350	0.5	3	28	55	12.9/15	115	89	95	81%	2" PLTD.	208-3-60	23	30	CARRIER 48HCFA04	ECONOMIZER INCLUDED	HAIL GUARDS, FULL ECONOMIZER AND DISCONNECT
3	CLASSROOM A & B	1900	500	0.5	5	46	55	13.4/15	115	90	95	81%	2" PLTD.	208-3-60	32	45	CARRIER 48HCEA06	ECONOMIZER INCLUDED POWER EXHAUST INCLUDED	HAIL GUARDS, FULL ECONOMIZER AND DISCONNECT
4	OFFICE & CONFERENCE	1600	350	0.5	4	37	55	13.4/15	115	90	95	81%	2" PLTD.	208-3-60	24	30	CARRIER 48HCEA05	ECONOMIZER INCLUDED	HAIL GUARDS, FULL ECONOMIZER AND DISCONNECT
5	LOUNGE	3000	800	0.5	7.5	62	55	13.4/15	224	184	95	81%	2" PLTD.	208-3-60	45	50	CARRIER 48HCFD08	ECONOMIZER INCLUDED POWER EXHAUST INCLUDED	HAIL GUARDS, FULL ECONOMIZER AND DISCONNECT. DUCT SMOKE DETECTORS. TWO-STAGE COOLING, VFD FAN
6	KITCHEN	1950	650	0.5	5	48	55	13.4/15	150	117	95	81%	2" PLTD.	208-3-60	32	45	CARRIER 48HCFA06	ECONOMIZER INCLUDED	HAIL GUARDS, FULL ECONOMIZER AND DISCONNECT

KITCHEN HOOD SCHEDULE

KH #

EQUIP. NO.	TYPE	LOCATION	EXHAUST CFM	STATIC PRESS. (IN. W.G.)	MATERIAL	DIMENSIONS (IN)				MANUFACTURER & MODEL	OPTIONS-ACCESSORIES	NOTES
						LENGTH	WIDTH	HEIGHT	WEIGHT (LBS)			
1	GREASE HOOD WALL MOUNTED CANOPY	KITCHEN	1000	1.2	430-SS	48"	48"	24"	–	GREENHECK GGEW-48-S GREASE GRABBER	PLENUM GREASE BAFFLES LED LIGHTING 600°F TEMP RATED	PROVIDE INTEGRAL ANSUL SYSTEM PROVIDE WITH DUCT COLLARS SHIPPED LOOSE AND 3" BACK AIR SPACE.
2	DISH	KITCHEN	450	0.5	11	48"	48"	24"	–	GREENHECK GD3-36-S	CONDENSATE BAFFLE	PROVIDE WITH DUCT COLLAR 3" BACK FILLER PANEL

KITCHEN EXHAUST FAN SCHEDULE

KEF #

EQUIP. NO.	TYPE	EQUIPMENT SERVED	CFM	STATIC PRESS. (IN. W.G.)	MOTOR				MANUFACTURER & MODEL	OPTIONS-ACCESSORIES	NOTES
					WATTS	HP	RPM	VOLT.-PH.-CY.			
1	ROOF MOUNTED	GREASE HOOD	1000	1.5	–	3/4	–	208-3-60	GREENHECK CUBE-161XP	–	CONTROL PANEL AT KH-1
2	ROOF MOUNTED	DISHWASHER HOOD	450	0.3	–	1/4	–	120-1-60	GREENHECK CUBE-090-G	–	CONTROLLED VIA WALL SWITCH

NOTES:
EQUAL OR BETTER PRODUCTS ALLOWED

ROOF EXHAUST FAN SCHEDULE

EF #

EQUIP. NO.	TYPE	ROOM SERVED	CFM	STATIC PRESS. (IN. W.G.)	MOTOR			MANUFACTURER & MODEL	OPTIONS-ACCESSORIES	NOTES
					HP	RPM	VOLT.-PH.-CY.			
1	DOWNBLAST	113 WOMEN'S 114 MEN'S JANITOR'S	1000	0.3	1/4	–	115-1-60	GREENHECK AE-12-433-A	BACKDRAFT DAMPER	SPEED CONTROLLER

NOTES:

CEILING EXHAUST FAN SCHEDULE

CEF #

EQPT. NO.	TYPE	LOCATION	CFM	STATIC PRESS. (IN. W.G.)	MOTOR				MANUFACTURER & MODEL	OPTIONS-ACCESSORIES	NOTES
					WATTS	HP	RPM	VOLT.-PH.-CY.			
1	CEILING MOUNTED	RESTROOM 102	60	0.2	20	–	950	115-1-60	GREENHECK SP-B80	BACKDRAFT DAMPER	CONTROLLED VIA WALL SWITCH

ELECTRIC UNIT HEATER

UH #

EQUIPMENT NO.	SPACE SERVING	HEATING (KW)	HEIGHT/ WIDTH/ DEPTH (IN)	MOUNTING HEIGHT (FT)	WEIGHT (LBS)	ELECTRICAL			MAKE & MODEL NO:	NOTES:
						V.-PH.-CY.	AMPS PER PHASE	MOCP		
1&2	MECHANICAL ELECTRICAL	3	16/14/7.5	9	27	208/1/60	14.5	–	QMARK MUH03-81	FACTORY DISCONNECT SWITCH WALL MOUNTED T-STAT WITH 24V CONTROL TRANSFORMER
3&4	STORAGES	3	16/14/7.5	8	27	208/1/60	14.5	–	QMARK MUH03-81	FACTORY DISCONNECT SWITCH WALL MOUNTED LINE VOLTAGE T-STAT

RESIDENTIAL RANGE HOOD SCHEDULE – ADD ALTERNATIVE

RH #A

EQUIP. NO.	TYPE	LOCATION	EXHAUST CFM	STATIC PRESS. (IN. W.G.)	COLLAR SIZE	VENTILATION STYLE	FAN TYPE	HOOD & FAN POWER				DIMENSIONS-BASE (IN)				MANUFACTURER & MODEL	OPTIONS-ACCESSORIES	NOTES
								VOLT.	PH.	BREAKER SIZE	OPERATING CURRENT	LENGTH	WIDTH	HEIGHT	WEIGHT(LBS)			
1A	RESIDENTIAL RANGE HOOD	CLASSROOM A 116	500	0.56	8"ø 12"ø TO FAN AND THROUGH ROOF	EXTERNAL FAN-TOP DISCHARGE	INLINE (EXTERNAL)	115	1	15 AMPS	1.7 AMPS	30"	23.5"	12.5"	86	ACCUREX XRRS-W-30-T-E-D-N W/ INLINE FAN	EXTERNAL FAN IN CEILING	PROVIDE INTEGRAL ANSUL SYSTEM PROVIDE WITH DUCT COLLARS AND 8" TO 12" ADAPTER FOR FAN CONNECTION AND ROOF PENETRATION.

OPTIONS/ACCESSORIES:
LISTED TO UL SUBJECT 300A, SELF-CONTAINED FIRE SUPPRESSION SYSTEM, ELECTRONIC DETECTION, FULLY PLUG AND PLAY DESIGN, NSF APPROVED SEALANT, USER INTERFACE SHIPPED LOOSE FOR ADA COMPLIANCE, AUTOMATIC RANGE DEACTIVATION AND PASSWORD PROTECTION, MANUAL PULL STATION, FIRE SYSTEM PERMIT, STARTUP AND PUFF TEST, FIRE TEST KIT, NFPA 101 COMPLIANT.

GRILLE – REGISTER – DIFFUSER SCHEDULE

S1 200cfm 8"ø

EQPT. NO.	SIZE	TYPE	PRESSURE DROP (IN. W.G.)	MAX NC	MANUFACTURER:	OPTIONS/ACCESSORIES/NOTES:
S1	24"x24"	CEILING SUPPLY, 4 CONES	0.08	30	KRUEGER 51400	LAY-IN CEILING
S2	12"x12"	CEILING SUPPLY GRILLE	0.08	30	KRUEGER 480-50BD	FACE OPERABLE DAMPER
S3	–	LINEAR SLOT	0.08	30	KRUEGER DFL	2 SLOTS, 1" WIDTH EACH, 72" LENGTH, 12" INLET SIZE UNLESS NOTED OTHERWISE.
S4	14"x6"	DUCT MOUNTED GRILLE	0.08	30	KRUEGER 5DMGSR	22.5 DEGREE DEFLECTION, 3/4" HORIZONTAL BLADES
R1	PER PLANS	CEILING RETURN PERFORATED	–	30	KRUEGER S580P	LAY-IN CEILING
E1	12"x12"	CEILING GRILLE	0.05	30	KRUEGER 1380L-OBD	FACE OPERABLE DAMPER

EEA CONSULTING ENGINEERS
4343 Pan American Freeway NE, Suite 239
Albuquerque, NM 87107
Main: 505.877.4499 - www.eeace.com
Project #: 2019MEP-25

G. DONALD DUDLEY AIA
ARCHITECT
ARCHITECTURE • INTERIORS • PLANNING
AIA • NCARB • LEED AP
SIMMS TOWER STUDIO 850
400 GOLD AVENUE SW
ALBUQUERQUE, NEW MEXICO 87102
TEL 505.243.8100

COLIN L. EVANS
NEW MEXICO
21314
PROFESSIONAL ENGINEER
04/13/2020

NEW BUILDING FOR:
RIO RANCHO SENIOR CENTER
CITY OF RIO RANCHO
NEW MEXICO

MARK	DATE	DESCRIPTION

GDDA PROJECT NO: 18-137
DATE: 04/13/2020
DRAWN BY: PU
CHECKED BY: CE
SET NO:
SHEET TITLE: MECHANICAL SCHEDULES

M601

PLUMBING SPECIFICATIONS

1. GENERAL NOTES
   - A. SUBMISSION OF PROPOSAL DIRECTLY OR INDIRECTLY IN CONNECTION WITH THIS WORK SHALL IMPLY THAT THE BIDDER HAS EXAMINED THE JOB SITE UNDER WHICH HE WILL BE OBLIGATED TO OPERATE SHOULD THEY BE AWARDED THE WORK UNDER THIS CONTRACT. NO EXTRA CHARGE WILL BE ALLOWED FOR FAILURE OF ANY BIDDER TO EXAMINE THE SITE PRIOR TO BID.
   - B. CONTRACTOR SHALL VISIT THE SITE AND VERIFY ALL DIMENSIONS IN THE FIELD, AND SHALL ADVISE THE ARCHITECT/ENGINEER OF ANY DISCREPANCIES BEFORE PERFORMING THE WORK.
   - C. DO NOT SCALE DRAWINGS.
   - D. ALL EQUIPMENT SHALL BE INSTALLED IN STRICT COMPLIANCE WITH MANUFACTURER'S WRITTEN INSTRUCTIONS. THE CONTRACTOR SHALL PROVIDE ALL HANGERS AND SUPPORTS REQUIRED FOR A COMPLETE INSTALLATION.
   - E. CONTRACTOR SHALL COORDINATE ALL WORK WITH THE OWNER AND ALL OTHER CONTRACTORS.
   - F. CONTRACTOR SHALL PROVIDE LABOR TO RECEIVE, UNLOAD, STORE, PROTECT, AND TRANSFER TO POINT OF INSTALLATION, OWNER FURNISHED ITEMS.
   - G. WHERE CONDUIT, CABLES, DUCTWORK, OR PIPING PASSES THROUGH FIRE RATED FLOORS OR WALLS, THE SLEEVES SHALL BE COMPLETELY SEALED WITH A FIRE STOP MATERIAL BEING SUITABLE FOR THIS SERVICE. THIS MATERIAL SHALL BE INSTALLED IN ACCORDANCE WITH THE REQUIREMENTS OF THE MANUFACTURER TO MAINTAIN THE FIRE RATING OF THE PENETRATED WALL OR FLOOR.
   - H. CONTRACTOR SHALL BE RESPONSIBLE FOR ALL CORING AS IT RELATES TO HIS WORK.
   - I. CONTRACTOR SHALL BE RESPONSIBLE FOR ALL BEAM PENETRATIONS AS IT RELATES TO HIS WORK. CONTRACTOR SHALL SUBMIT SIZE AND LOCATION TO THE STRUCTURAL ENGINEER FOR REVIEW AND DETAIL.
   - J. UPON COMPLETION OF CONSTRUCTION, THE CONTRACTOR SHALL SUPPLY THE ENGINEER WITH (1) COMPLETE SET OF FULL SIZE AS–BUILT DOCUMENTS AND (3) COPIES OF OPERATIONS AND MAINTENANCE MANUALS (SHALL BE OBTAINED AT CONTRACTOR'S EXPENSE).
   - J. FIELD COORDINATION DURING CONSTRUCTION IS IMPERATIVE. MAKE REASONABLE ALLOWANCES FOR UNSEEN CONDITIONS.

2. SUMMARY AND SCOPE OF WORK:
   - A. THE DRAWINGS INDICATE DIAGRAMMATICALLY THE EXTENT, GENERAL CHARACTER AND LOCATION OF THE WORK INCLUDED. OFFSETS AND/OR CHANGES IN ELEVATION OF PIPING DUE TO STRUCTURAL OR OTHER INTERFERENCES SHALL BE PROVIDED WITHOUT EXTRA COST.
   - B. CONTRACTOR SHALL VERIFY AND EVALUATE ALL EXISTING CONDITIONS PRIOR TO THE COMMENCEMENT OF WORK.
   - C. SUBCONTRACTOR SHALL VERIFY EXISTENCE AND LOCATION OF ALL UTILITY SERVICES AND COORDINATE AS REQUIRED BY THEIR RESPECTIVE AREA OF THE CONSTRUCTION, NOTIFYING THE PRIME CONTRACTOR OF VARIATIONS OR CONFLICTS.
   - D. PROVIDE ALL LABOR, MATERIALS, AND EQUIPMENT NECESSARY FOR THE INSTALLATION OF COMPLETE AND OPERATING SYSTEMS.
   - E. PROVIDE ONE YEAR GUARANTEE AGAINST DEFECTIVE MATERIALS AND WORKMANSHIP AFTER FINAL ACCEPTANCE BY OWNER.
   - F. ENTIRE DEMOLITION AND NEW WORK INSTALLATION SHALL CONFORM TO ALL APPLICABLE LAWS, CODES, AND REGULATIONS OF MUNICIPAL, STATE AND FEDERAL AUTHORITIES.
   - G. SHOP DRAWINGS: SUBMIT MATERIAL LIST AND SHOP DRAWINGS FOR MAJOR EQUIPMENT AND MATERIALS TO THE ARCHITECT/ENGINEER FOR APPROVAL.
   - H. IF NOT SPECIFICALLY DEFINED IN THESE CONSTRUCTION DOCUMENTS, MATERIALS AND/OR EQUIPMENT SHALL BE IDENTIFIED BY THE SUBCONTRACTOR WITH SUFFICIENT TIME TO ALLOW SELECTION, PURCHASE, AND DELIVERY TO MAINTAIN CONSTRUCTION SCHEDULE.
   - I. THE MANUFACTURER OF EQUIPMENT OR MATERIALS FIRST NAMED ON THE DRAWINGS IS THE BASIS OF DESIGN. OTHER MANUFACTURERS, IF LISTED, ARE CONSIDERED GENERAL EQUIVALENTS ONLY. WHERE CONTRACT DOCUMENTS PERMIT SELECTION OF EQUIVALENTS, OR WHERE SUBSTITUTIONS ARE AUTHORIZED, COORDINATE CLEARANCE AND OTHER INTERFACE REQUIREMENTS WITH MECHANICAL AND OTHER WORK.
     - i. PROVIDED NECESSARY ADDITIONAL ITEMS SO THAT SELECTED OR SUBSTITUTED ITEM OPERATES EQUIVALENT TO THE BASIS OF DESIGN AND PROPERLY FITS IN THE AVAILABLE SPACE ALLOCATED FOR THE BASIS OF DESIGN.
     - ii. PROVIDED ALL FEATURES WHICH RE STANDARD ON THE BASIS OF DESIGN PLUS ANY SPECIFIED OPTIONS.
     - iii. BE RESPONSIBLE FOR ASSURING THAT PIPING, CONDUIT, DUCT, FLUE, AND OTHER SERVICE LOCATIONS FOR GENERAL EQUIVALENTS OR SUBSTITUTIONS DO NOT CAUSE ACCESS, SERVICE, OR OPERATIONAL DIFFICULTIES ANY GREATER THAN WOULD BE ENCOUNTERED WITH THE BASE DESIGN.
   - J. THE CONTRACTOR SHALL SECURE ALL PERMITS OR APPLICATIONS AND PAY ANY AND ALL FEES.
   - K. PROVIDE ALL NECESSARY TEMPORARY OR PERMANENT CAPS OR PLUGS FOR PIPING. DO NOT LEAVE PIPING OPEN ENDED.
   - L. WHERE USED, THE TERM "PROVIDE" SHALL MEAN "FURNISH AND INSTALL".
   - M. INSTALL ALL SHOCK ABSORBERS IN ACCORDANCE WITH THE LATEST "PLUMBING AND DRAINAGE INSTITUTE STANDARDS" FOR WATER HAMMER ARRESTORS.
   - N. LOCATE ACCESS PANELS IN NON ACCESSIBLE CEILINGS AND WALLS FOR ALL VALVES, SHOCK ABSORBERS, CLEANOUTS AND ALL OTHER ITEMS THAT REQUIRE ACCESS TO PROPERLY MAINTAIN OR SERVICE THE BUILDING.
   - O. PROVIDE CLEANOUTS AS REQUIRED BY CODE.
   - P. INSTALL WORK SO AS TO BE READILY ACCESSIBLE FOR OPERATION, MAINTENANCE, AND REPAIR. MINOR DEVIATIONS FROM DRAWINGS MAY BE MADE TO ACCOMPLISH THIS, BUT CHANGES WHICH INVOLVE EXTRA COST SHALL NOT BE MADE WITHOUT PRIOR APPROVAL.
   - Q. ALL VENT THRU ROOF (VTR) ROOF PENETRATIONS INDICATED ON PLANS ARE PRELIMINARY. FINAL LOCATIONS SHALL BE COORDINATED WITH ALL TRADES. ALL VTR'S SHALL BE A MINIMUM OF 10'–0" FROM ALL FRESH AIR INTAKE OPENINGS.

3. PLUMBING EQUIPMENT AND PIPING IDENTIFICATION
   - A. PROVIDE IDENTIFICATION OF ALL EQUIPMENT, PIPES, AND VALVES.
   - B. IDENTIFICATION DEVICES TO BE USED SHALL INCLUDE THE FOLLOWING:
     - i. PLASTIC PIPE MARKERS
     - ii. VALVE TAGS AND EQUIPMENT TAGS

4. INSULATION
   - A. REFER TO SPECIFICATIONS.
   - B. PLENUM RATED FIRE RETARDANT JACKET ON PIPE INSULATION.
   - C. VALVES AND FITTINGS: PREMOLDED FIBERGLASS FITTINGS OR RADIAL MITERED SEGMENTS OF PIPE INSULATION, INSULATING CEMENT, FIBERGLASS REINFORCING CLOTH, AND MASTIC, VAPOR SEAL INSULATION ON CW PIPING.

5. SUPPORTS AND HANGERS
   - A. ALL PIPE SHALL BE SUPPORTED FROM THE BUILDING STRUCTURE IN A NEAT AND WORKMANLIKE MANNER. THE USE OF WIRE AND PREFORMED METAL TO SUPPORT PIPES WILL NOT BE PERMITTED. SPACING OF PIPE SUPPORTS SHALL BE IN ACCORDANCE WITH PLUMBING CODE.
   - B. SUPPORT NEW PIPING FROM BUILDING STRUCTURE AND OR FRAMING IN AN APPROVED MANNER. WHERE OVERHEAD CONSTRUCTION DOES NOT PERMIT FASTENING OF SUPPORTS FOR EQUIPMENT, FURNISH ADDITIONAL FRAMING.

6. DOMESTIC WATER SUPPLY PIPING
   - A. PROVIDE TYPE "L" HARD DRAWN COPPER TUBING WITH 125 PSI SOLDER JOINTS, COPPER OR BRASS FITTINGS. ALL SOLDER TO BE "NO LEAD" TYPE.
   - B. FLUX: NONAGGRESSIVE, NONCORROSIVE TYPE, "NO LEAD" TYPE.
   - C. VALVES: COLD AND HOT WATER, BALL VALVES, 2 INCHES AND SMALLER, 600 PSI WOG, SERVICEABLE IN LINE, SOLDER ENDS.

7. SANITARY DRAINAGE AND VENT PIPING
   - A. ABOVE GRADE:
     - i. REFER TO SPECIFICATIONS. SCHEDULE 40 PVC SHALL BE ACCEPTABLE WHERE ALLOWED BY CODE, EXCEPT WHERE OTHERWISE NOTED.
     - ii. DRAINAGE PIPING SHALL RUN AS STRAIGHT AS POSSIBLE AND SHALL HAVE LONG TURN FITTINGS
     - iii. ALL VENT PIPING SHALL BE SLOPED TO DRAIN BACK TO FIXTURES.
     - iv. CONTRACTOR IS RESPONSIBLE FOR PROPER FLASHING OF THE VENT PIPING RUN THROUGH THE ROOF OR WALL.

8. TESTING
   - A. PLUMBING SYSTEMS SHALL BE FLOW AND PRESSURE TESTED IN ACCORDANCE WITH STANDARD PRACTICE AND PLUMBING CODE.

ABBREVIATIONS

ABBR.	DESCRIPTION	ABBR.	DESCRIPTION
AFF	ABOVE FINISHED FLOOR	LBS	POUNDS
A.D.	ACCESS DOOR	MBH	THOUSAND BTU'S PER HOUR
DIA	DIAMETER	(N)	NEW
DN	DOWN	N.I.C.	NOT IN CONTRACT
DF	DRINKING FOUNTAIN	NOM	NOMINAL
(E)	EXISTING	OC	ON CENTER
EXP	EXPANSION	PH	PHASE
FPM	FEET PER MINUTE	POC	POINT OF CONNECTION
FPS	FEET PER SECOND	TEMP	TEMPERATURE
GPM	GALLONS PER MINUTE	TYP	TYPICAL
HP	HORSEPOWER	URN	URINAL
HZ	HERTZ	V	VOLTAGE
IPS	INCHES PER SECOND	VTR	VENT THROUGH ROOF
KW	KILOWATTS	WC	WATER CLOSET
LAV	LAVATORY		

SHEET LIST

- P001: PLUMBING LEGEND & SPECIFICATIONS
- P101: PLUMBING PLANS – BASE BID
- P102: PLUMBING PLANS – ALTERNATE
- P103: PLUMBING ROOF PLANS
- P401: PLUMBING WASTE & VENT RISER DIAGRAM
- P501: PLUMBING DIAGRAMS
- P502: PLUMBING DIAGRAMS
- P601: PLUMBING SCHEDULES

LEGEND

SYMB.	DESCRIPTION	SYMB.	DESCRIPTION
	RISER UP	GM	GAS METER
	RISER UP		GAS PRESSURE REGULATOR
	RISER DOWN		
	RISER DROP	WH	HOT WATER HEATER
	BRANCH– TOP CONNECTION	HB	HOSE BIBB WITH VACUUM BREAKER
	BRANCH– BOTTOM CONNECTION		GATE VALVE
	BRANCH– SIDE CONNECTION		GATE VALVE, ANGLE
	DIRECTION OF FLOW	PI/GA	GAUGE WITH GAUGE COCK/PRESSURE INDICATOR
	CAP ON END OF PIPE		GLOBE VALVE
	COLD WATER (CW)		GLOBE VALVE, ANGLE
	HOT WATER (HW)		LIFT CHECK VALVE
	HOT WATER RECIRCULATING (HWR)	OS	OPEN SITE DRAIN
	WASTE (W)		PLUG VALVE
	VENT–ABOVE (V)		PRESSURE GAUGE
	VENT–BELOW (V)		PRESSURE REDUCING VALVE (PRV)
GAS GAS	GAS (G)	PT/PS	PRESSURE TRANSMITTER OR PRESSURE SWITCH
	COMPRESSED AIR (CA)		RELIEF/SAFETY VALVE
	VACUUM (VAC)	RD	ROOF DRAIN
	POINT OF CONNECTION		SOLENOID VALVE
	POINT OF DISCONNECT		STRAINER
WH #	EQUIPMENT DESIGNATION		STRAINER WITH BLOW OFF VALVE
ADR	AREA DRAIN		SWING CHECK VALVE
	BACKFLOW PREVENTOR (REDUCED ZONE)		TEMPERATURE GAUGE
	BACKFLOW PREVENTOR (DOUBLE CHECK VALVE ASSEMBLY)	TP	TEMPERATURE AND PRESSURE RELIEF VALVE
	BALL VALVE	TT	TEMPERATURE TRANSMITTER
	BUTTERFLY VALVE	TH/TI	THERMOMETER/TEMPERATURE INDICATOR
	CHECK VALVE		THREE WAY CONTROL VALVE
CBV	CIRCUIT SETTING BALANCING VALVE		TWO WAY CONTROL VALVE
CO	CLEANOUT (FLOOR)		UNION– SCREWED OR FLANGED
CO	CLEANOUT (WALL)		VACUUM BREAKER
	FIXTURE ISOLATION VALVE		VALVE IN RISE OR DROP
	FLEXIBLE CONNECTION	SA	WATER HAMMER ARRESTER
FD	FLOOR DRAIN	WM	WATER METER
FS	FLOOR SINK		
FS	FLOW SWITCH		
	GAS COCK		

EEA CONSULTING ENGINEERS
4343 Pan American Freeway NE, Suite 239
Albuquerque, NM 87107
Main: 505.877.4499 - www.eeace.com
Project #: 2019MEP-25

SIMMS TOWER STUDIO 850
400 GOLD AVENUE SW
ALBUQUERQUE, NEW MEXICO
87102
TEL 505.243.8100

G. DONALD DUDLEY AIA
ARCHITECT
ARCHITECTURE • INTERIORS • PLANNING
AIA • NCARB • LEED AP

COLIN L EVANS
NEW MEXICO
21314
PROFESSIONAL ENGINEER
04/13/2020

NEW BUILDING FOR:
RIO RANCHO SENIOR CENTER
CITY OF RIO RANCHO NEW MEXICO

MARK	DATE	DESCRIPTION

GDDA PROJECT NO: 18–137
DATE: 04/13/2020
DRAWN BY: PU
CHECKED BY: CE
SET NO:
SHEET TITLE: PLUMBING LEGENDS & SPECS

P001

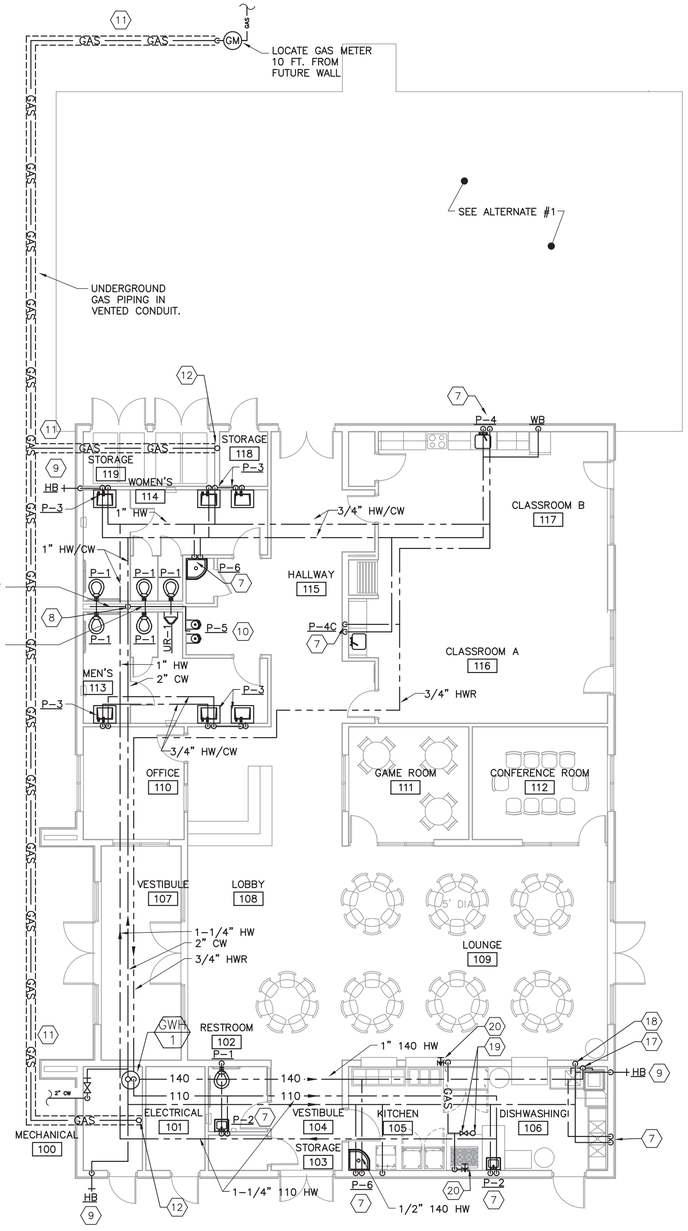

A1 PLUMBING W&G – BASE BID

1/8"=1'-0"

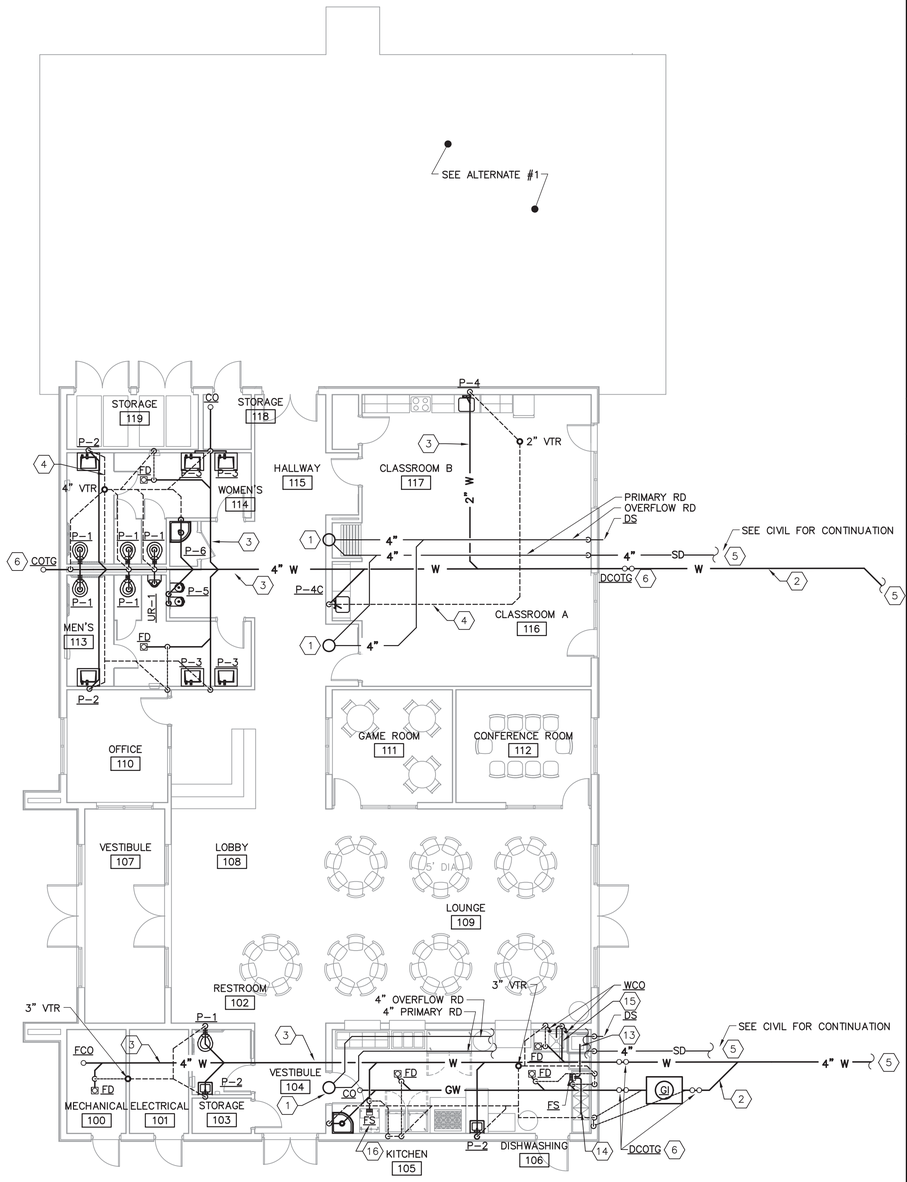

A5 PLUMBING W&V – BASE BID

1/8"=1'-0"

GENERAL SHEET NOTES

A. INSTALL WASTE PIPING BELOW SLAB AT 1/4" PER FOOT SLOPE.
B. FOR COUNTERTOP AND WALL MOUNTED PLUMBING FIXTURES (LAVATORIES, COUNTERTOP SINKS), PROVIDE A T-PATTERN WALL CLEANOUT BELOW PLUMBING FIXTURE. CLEANOUT SHALL BE CAST IRON DRAINAGE T-PATTERN, 90 DEGREE BRANCH FITTING WITH SQUARE HEAD BRASS SCREW PLUGS OF THE SAME SIZE AS THE PIPE UP TO AND INCLUDING 4". WALL CLEANOUTS IN FINISHED AREAS SHALL BE ZURN NO. Z-1460-8 WITH POLISHED STAINLESS STEEL OR CHROME PLATED METAL COVER.
C. PROVIDE WALL CLEANOUT FOR ALL PLUMBING FIXTURES UNLESS NOTED OTHERWISE.
D. PROVIDE MANUFACTURED TRAP SEAL FOR ALL FLOOR SINKS AND FLOOR DRAINS.
E. COLD AND HOT WATER DROPS/RISES TO FIXTURES SHALL BE VERTICAL BETWEEN THE FRAMING STUDS.
F. PROVIDE BALL VALVES FOR ALL WATER ISOLATION AND SUPPLY TAKE-OFFS.
G. WATER HAMMER ARRESTERS SHALL HAVE MAINTENANCE ACCESS IN THE FORM OF AN ACCESS PANEL.
H. REFER TO PLUMBING RISER DIAGRAMS ON SHEET P401 FOR FINAL PIPE SIZING.
I. REFER TO PLUMBING DIAGRAMS ON SHEETS P502 FOR INSTALLATION INFORMATION.

KEYNOTES

1. ROOF DRAIN PIPING (PRIMARY AND OVERFLOW) UP TO ROOF DRAIN.
2. ROUTE PIPING BELOW GRADE
3. ROUTE PIPING BELOW FLOOR SLAB
4. ROUTE PIPING IN CEILING SPACE
5. SEE CIVIL DRAWINGS FOR CONTINUATION
6. COORDINATE CLEANOUT TO GRADE LOCATION WITH ARCHITECT AND CIVIL.
7. DROP 1/2" HOT AND COLD WATER IN EXTERIOR WALL ON WARM SIDE OF INSULATION.
8. DROP 2" COLD WATER LINE DOWN TO WATER CLOSETS. PROVIDE SHUTOFF VALVE IN CEILING WITH ACCESS PANEL, AND WATER HAMMER ARRESTOR IN WALL WITH ACCESS PANEL.
9. 3/4" CW DOWN INSIDE INTERIOR WALL TO WALL HYDRANT WITH VACUUM BREAKER.
10. DROP 1/2" COLD WATER CONCEALED INSIDE WALL, DOWN TO FIXTURE.
11. INSTALL GAS PIPE IN A VENTED SLEEVE, SEE GAS DIAGRAM.
12. EXTEND GAS PIPING UP TO ROOF, SEE ROOF PLAN. CONCEAL PIPE AND SLEEVE INSIDE WALL. EXTEND SLEEVE VENTING UP THROUGH ROOF, SEE GAS DIAGRAM.
13. ROUTE DISHWASHER DRAIN PIPING TO GREASE WASTE FLOOR SINK FOR INDIRECT DRAINAGE. REFER TO DIAGRAM ON SHEET P502.
14. ROUTE 3-COMPARTMENT SINK DRAIN PIPING TO GREASE WASTE FLOOR SINK FOR INDIRECT DRAINAGE. REFER TO DIAGRAM ON SHEET P502.
15. CONNECT FOOD WASTE DISPOSAL DRAIN PIPING DIRECTLY TO UNDERFLOOR REGULAR WASTE PIPE DOWNSTREAM OF FLOOR DRAIN. REFER TO SHEET P502.
16. ROUTE ICE MAKER DRAIN PIPING TO REGULAR WASTE FLOOR SINK FOR INDIRECT DRAINAGE. REFER TO DIAGRAM ON SHEET P502.
17. 1" 140 HW DOWN EXPOSED ON WALL TO BACKFLOW DEVICE (WATTS LF009QT OR EQUIVALENT). SUPPLY HW TO DISHWASHER AND PRE-RINSE SPRAYER, AND PROVIDE WATER SHOCK ARRESTOR.
18. 1/2" CW TO PRE-RINSE SPRAYER WITH BACKFLOW DEVICE (WATTS LF009QT OR EQUIVALENT).
19. 1" LOW PRESSURE (10"W.C.) GAS SUPPLY PIPE FROM ROOF. PROVIDE AUTOMATIC SHUTOFF VALVE INTERLOCKED WITH ANSUL FIRE SUPPRESSION SYSTEM ON KITCHEN HOOD.
20. 3/4" GAS PIPE CONNECTION TO COOKING APPLIANCE WITH GAS COCK AND DIRT LEG.

EEA CONSULTING ENGINEERS
4343 Pan American Freeway NE, Suite 239
Albuquerque, NM 87107
Main: 505.877.4499 - www.eeace.com
Project #: 2019MEP-25

G. DONALD DUDLEY AIA
ARCHITECT
ARCHITECTURE • INTERIORS • PLANNING
AIA • NCARB • LEED AP
SIMMS TOWER STUDIO 850
400 GOLD AVENUE SW
ALBUQUERQUE, NEW MEXICO 87102
TEL 505.243.8100

COLIN L. EVANS
NEW MEXICO
21314
PROFESSIONAL ENGINEER
04/13/2020

NEW BUILDING FOR:
RIO RANCHO SENIOR CENTER
CITY OF RIO RANCHO NEW MEXICO

MARK	DATE	DESCRIPTION

GDDA PROJECT NO: 18-137
DATE: 04/13/2020
DRAWN BY: PU
CHECKED BY: CE
SET NO:
SHEET TITLE: PLUMBING WASTE & VENT & WATER & GAS PLAN –BASE BID

P101

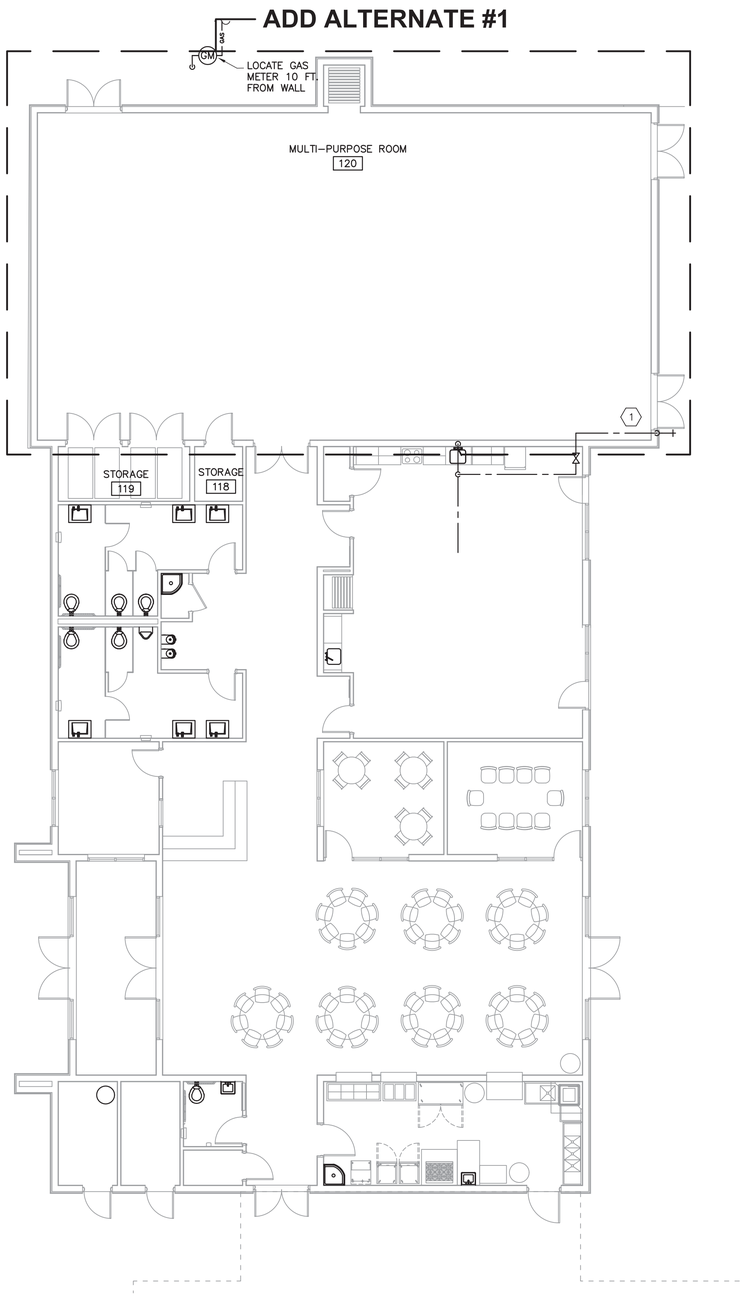

A1 PLUMBING W&G – ADD ALTERNATE #1
1/8"=1'-0"

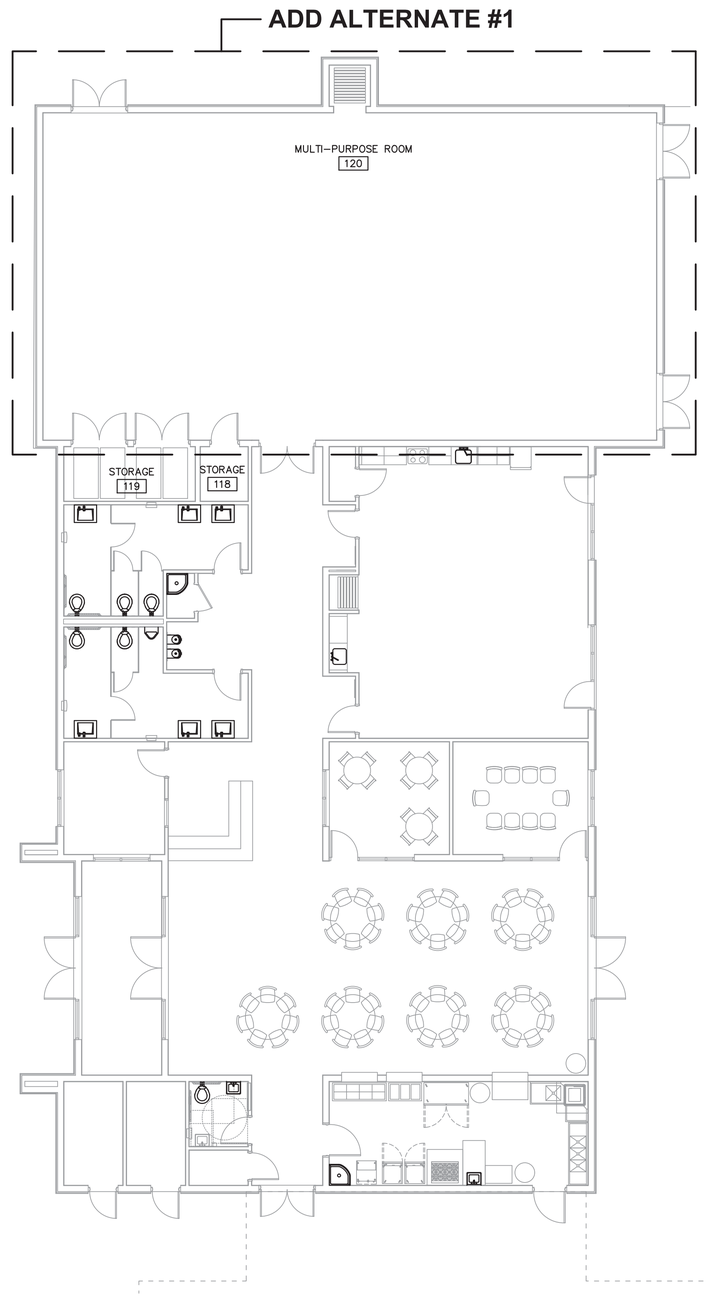

A5 PLUMBING W&V – ADD ALTERNATE #1
1/8"=1'-0"

NORTH

KEYNOTES

1. 3/4" CW DOWN INSIDE INTERIOR WALL TO WALL HYDRANT WITH VACUUM BREAKER.

EEA CONSULTING ENGINEERS
4343 Pan American Freeway NE, Suite 239
Albuquerque, NM 87107
Main: 505.877.4499 - www.eeace.com
Project #: 2019MEP-25

G. DONALD DUDLEY AIA
ARCHITECT
ARCHITECTURE • INTERIORS • PLANNING
AIA • NCARB • LEED AP
SIMMS TOWER STUDIO 850
400 GOLD AVENUE SW
ALBUQUERQUE, NEW MEXICO
87102
TEL 505.243.8100

COLIN L. EVANS
NEW MEXICO
21314
PROFESSIONAL ENGINEER
04/13/2020

NEW BUILDING FOR:
RIO RANCHO
SENIOR CENTER
CITY OF RIO RANCHO
NEW MEXICO

MARK	DATE	DESCRIPTION

GDDA PROJECT NO: 18–137
DATE: 04/13/2020
DRAWN BY: PU
CHECKED BY: CE
SET NO:
SHEET TITLE: PLUMBING WASTE & VENT & WATER & GAS PLAN –ALTERNATE PLAN

P102

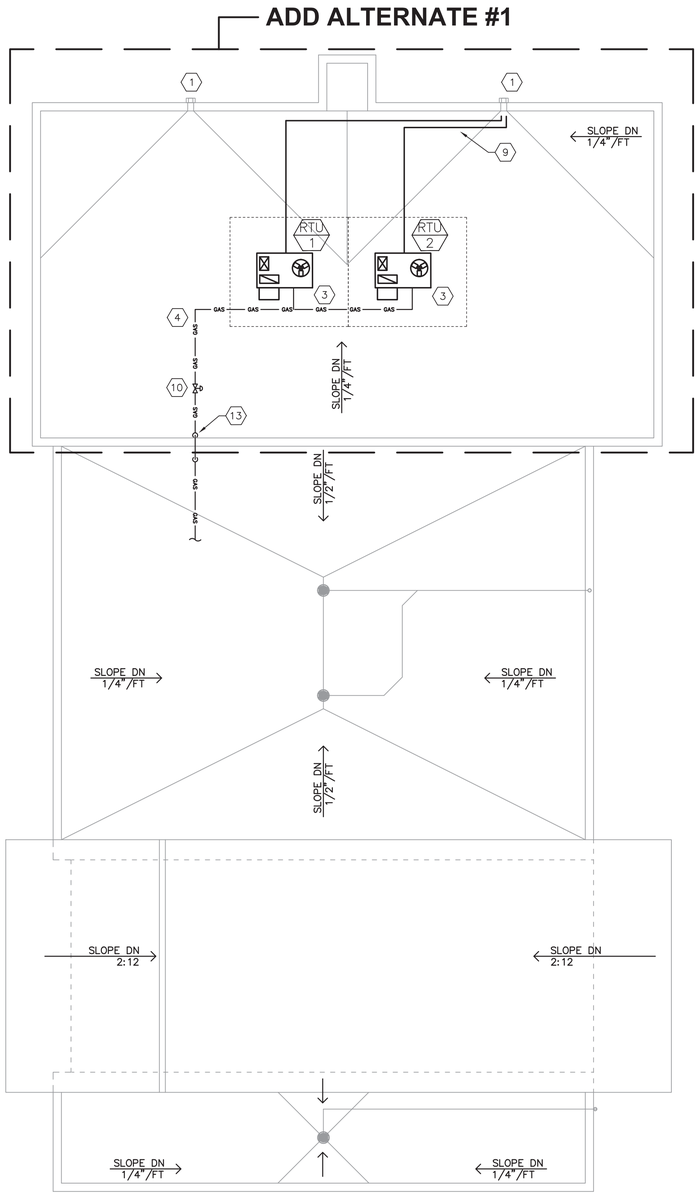

A1 PLUMBING ROOF PLAN – ADD ALTERNATE #1
1/8"=1'-0"

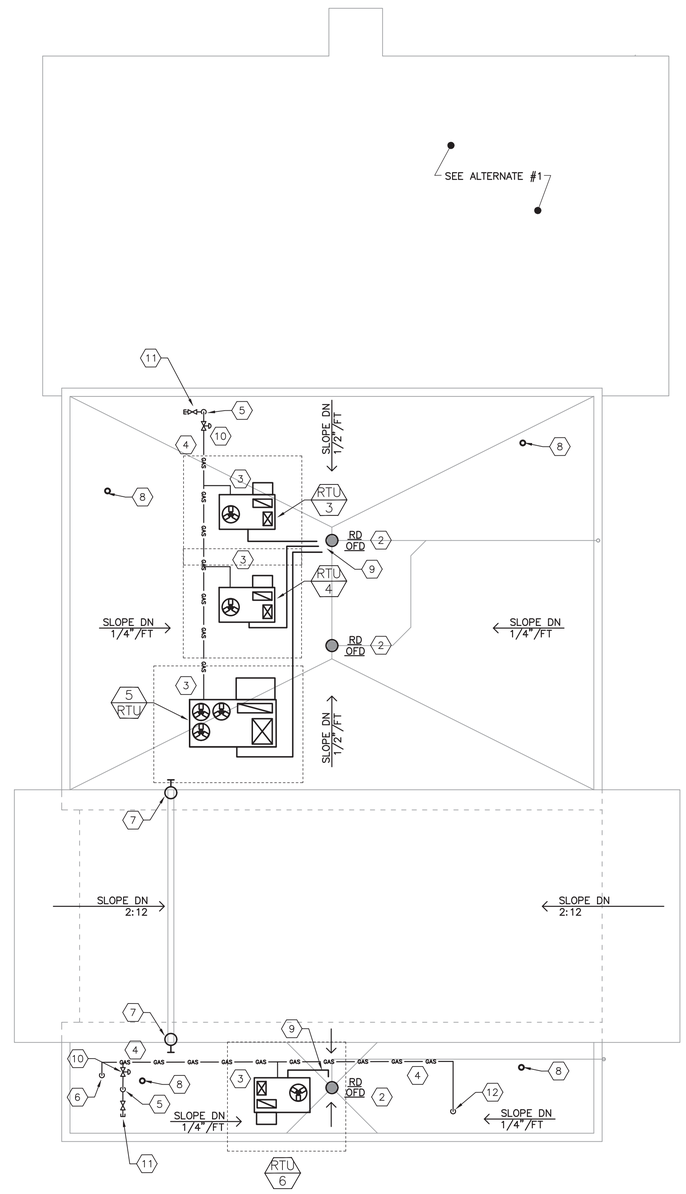

A5 PLUMBING ROOF PLAN – BASE BID
1/8"=1'-0"

GENERAL SHEET NOTES

A. PROVIDE SUPPORTS FOR ALL PIPING ON ROOF. SUPPORTS TO KEEP PIPE A MINIMUM OF 6" ABOVE ROOF SURFACE. PROVIDE SLIP-SHEET UNDER ALL SUPPORTS. COORDINATE WITH ROOFING CONTRACTOR.
B. COORDINATE FINAL ROOF DRAIN LOCATIONS WITH ARCHITECTURAL PLANS.

KEYNOTES

1. ROOF SCUPPER SHOWN FOR REFERENCE, SEE ARCHITECTURAL DRAWINGS.
2. COMBINATION ROOF DRAIN WITH CONCENTRIC OVERFLOW DRAIN. SEE ARCHITECTURAL DRAWINGS FOR EXACT LOCATION TO COORDINATE WITH ROOF AND INSULATION PITCH. SEE WASTE & VENT FLOOR PLAN FOR DRAIN PIPING.
3. EXTEND GAS PIPE TO AHU AND PROVIDE GAS COCK, DIRT LEG, AND FLEX CONNECTION.
4. GAS PIPING EXPOSED ON ROOF. PROVIDE SUPPORTS SPACED PER CODE AND MANUFACTURER REQUIREMENTS. SUPPORTS TO BE A MAXIMUM OF 6FT ON CENTER FROM EACH OTHER. COORDINATE WITH ROOFING WORK.
5. GAS AND VENT FOR GAS SLEEVE UP THROUGH ROOF. SEE FLOOR PLAN BELOW; SEE GAS RISER DIAGRAM.
6. GAS PIPING DOWN THROUGH ROOF TO WATER HEATER IN MECHANICAL ROOF. COORDINATE ROOF PENETRATION REQUIREMENTS WITH ROOFING CONTRACTOR. PROVIDE EXPOSED GAS VALVE ON ROOF BEFORE DROP INTO BUILDING.
7. DRAIN PIPE DOWN FROM UPPER ROOF TO LOWER ROOF. PROVIDE PIPE FROM UPPER GUTTER, DROP DOWN CONCEALED IN WALL AND DISCHARGE ONTO LOWER ROOF. SEE ARCHITECTURAL DETAILS.
8. SANITARY VENT UP THROUGH ROOF; SEE FLOOR PLAN FOR BELOW. MAINTAIN 10FT SEPARATION FROM ALL OUTSIDE AIR OPENINGS ON RTUS.
9. PROVIDE 1" CONDENSATE DRAIN PIPE FROM RTU TO ROOF DRAIN\SCUPPER. PROVIDE SLIP SHEET, BLOCKING, AND ATTACHMENTS AS NEEDED. SEE CONNECTION DETAIL
10. GAS PRESSURE REGULATOR ON ROOF. PROVIDE SUPPORTS ON BOTH SIDE OF REGULATOR. MAINTAIN 10FT SEPARATION FROM ALL OUTSIDE AIR OPENINGS ON RTU'S. SEE GAS RISER DIAGRAM.
11. PROVIDE VALVE AND CAP FOR FUTURE EXPANSION.
12. GAS PIPING DOWN THROUGH ROOF TO KITCHEN EQUIPMENT. COORDINATE ROOF PENETRATION REQUIREMENTS WITH ROOFING CONTRACTOR. PROVIDE EXPOSED GAS VALVE ON ROOF BEFORE DROP INTO BUILDING.
13. ROUTE GAS PIPING UP\OVER PARAPET AND DOWN TO ROOF LEVEL. PROVIDE SUPPORT FROM ROOF, NOT PARAPET. COORDINATE WITH ARCHITECTURAL DETAILS.

EEA CONSULTING ENGINEERS
4343 Pan American Freeway NE, Suite 239
Albuquerque, NM 87107
Main: 505.877.4499 - www.eeace.com
Project #: 2019MEP-25

G. DONALD DUDLEY AIA
ARCHITECT
ARCHITECTURE • INTERIORS • PLANNING
AIA • NCARB • LEED AP
SIMMS TOWER STUDIO 850
400 GOLD AVENUE SW
ALBUQUERQUE, NEW MEXICO 87102
TEL 505.243.8100

COLIN L. EVANS
NEW MEXICO
21314
PROFESSIONAL ENGINEER
04/13/2020

NEW BUILDING FOR:
RIO RANCHO SENIOR CENTER
CITY OF RIO RANCHO
NEW MEXICO

MARK	DATE	DESCRIPTION

GDDA PROJECT NO: 18-137
DATE: 04/13/2020
DRAWN BY: PU
CHECKED BY: CE
SET NO:
SHEET TITLE: PLUMBING ROOF PLANS

P103

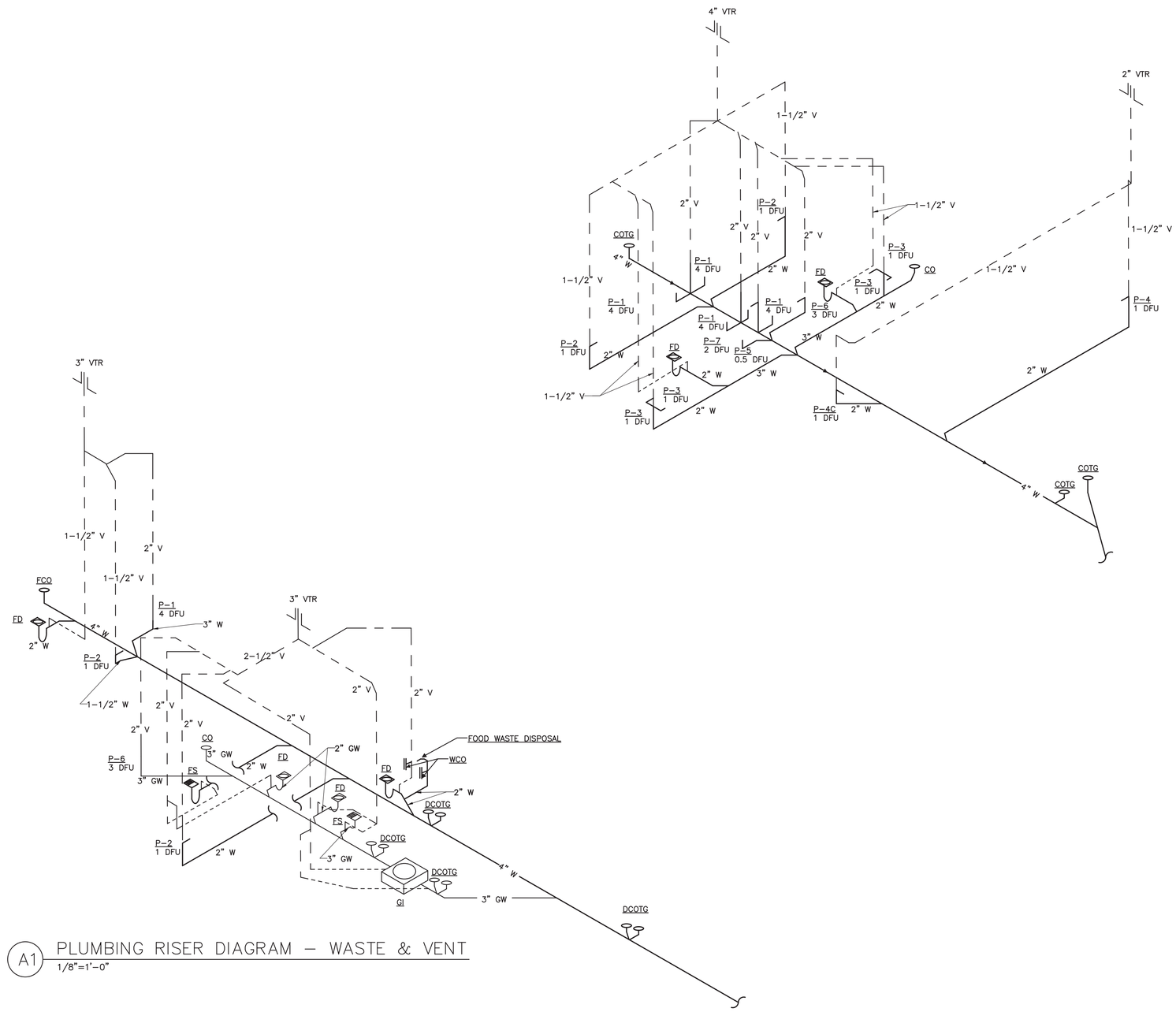

A1 PLUMBING RISER DIAGRAM – WASTE & VENT

1/8"=1'-0"

G. DONALD DUDLEY AIA
ARCHITECT
ARCHITECTURE • INTERIORS • PLANNING
AIA • NCARB • LEED AP
SIMMS TOWER STUDIO 850
400 GOLD AVENUE SW
ALBUQUERQUE, NEW MEXICO
87102
TEL 505.243.8100

COLIN L EVANS
NEW MEXICO
21314
PROFESSIONAL ENGINEER
04/13/2020

NEW BUILDING FOR:

RIO RANCHO
SENIOR CENTER

CITY OF RIO RANCHO
NEW MEXICO

MARK	DATE	DESCRIPTION

GDDA PROJECT NO: 18-137

DATE: 04/13/2020

DRAWN BY: PU

CHECKED BY: CE

SET NO:

SHEET TITLE:
PLUMBING
WASTE & VENT
RISER DIAGRAM

EEA CONSULTING ENGINEERS
4343 Pan American Freeway NE, Suite 239
Albuquerque, NM 87107
Main: 505.877.4499 - www.eeace.com
Project #: 2019MEP-25

P401

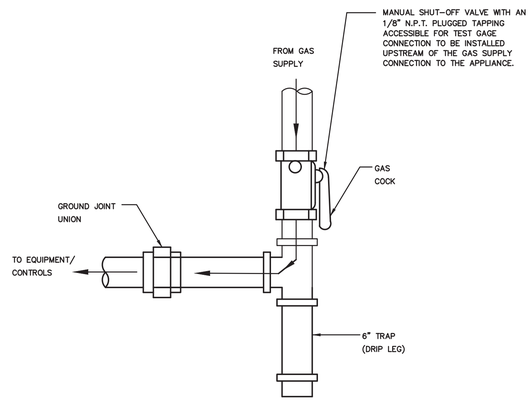

GAS CONNECTION TO EQUIPMENT DIAGRAM

NOT TO SCALE

DETP227

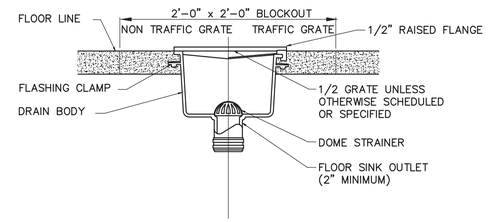

FLOOR SINK DIAGRAM

NOT TO SCALE

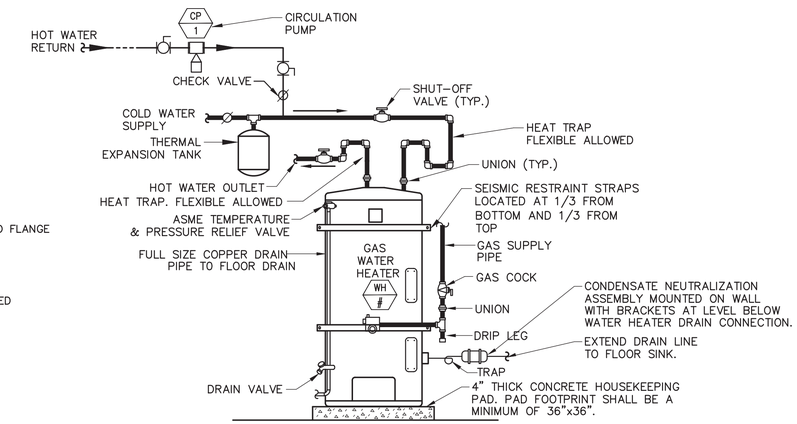

WATER HEATER DIAGRAM

NOT TO SCALE

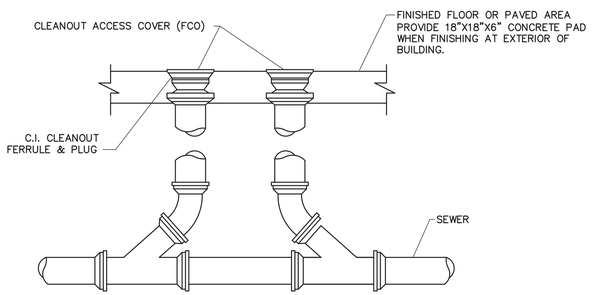

DOUBLE CLEANOUT DIAGRAM (DCO)

NOT TO SCALE

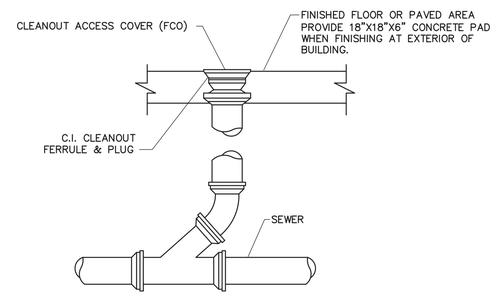

SINGLE CLEANOUT DIAGRAM (FCO)

NOT TO SCALE

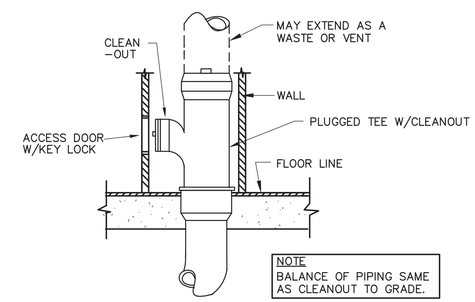

WALL CLEANOUT DIAGRAM

NOT TO SCALE

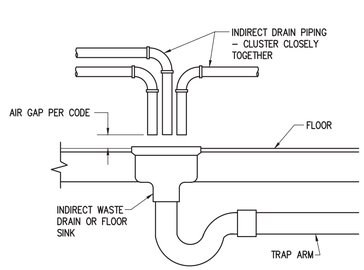

INDIRECT WASTE DRAIN DIAGRAM

NOT TO SCALE

DETP210

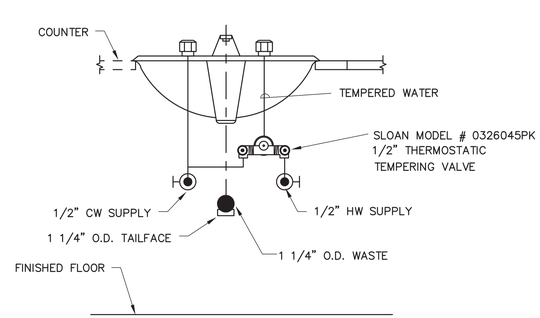

LOCAL MIXING VALVE DIAGRAM

NOT TO SCALE

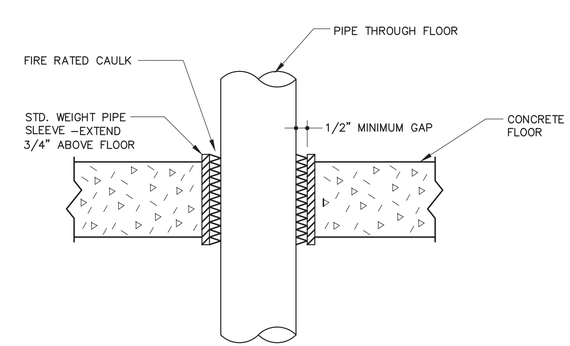

PIPE SLEEVE THROUGH FLOOR DIAGRAM

NOT TO SCALE

EEA CONSULTING ENGINEERS
4343 Pan American Freeway NE, Suite 239
Albuquerque, NM 87107
Main: 505.877.4499 - www.eeace.com
Project #: 2019MEP-25

G. DONALD DUDLEY AIA
ARCHITECT
ARCHITECTURE • INTERIORS • PLANNING
AIA • NCARB • LEED AP
SIMMS TOWER STUDIO 850
400 GOLD AVENUE SW
ALBUQUERQUE, NEW MEXICO
87102
TEL 505.243.8100

COLIN L. EVANS
NEW MEXICO
21314
PROFESSIONAL ENGINEER
04/13/2020

NEW BUILDING FOR:
RIO RANCHO SENIOR CENTER
CITY OF RIO RANCHO
NEW MEXICO

MARK	DATE	DESCRIPTION

GDDA PROJECT NO: 18-137

DATE: 04/13/2020

DRAWN BY: PU

CHECKED BY: CE

SET NO:

SHEET TITLE: PLUMBING DIAGRAMS

P501

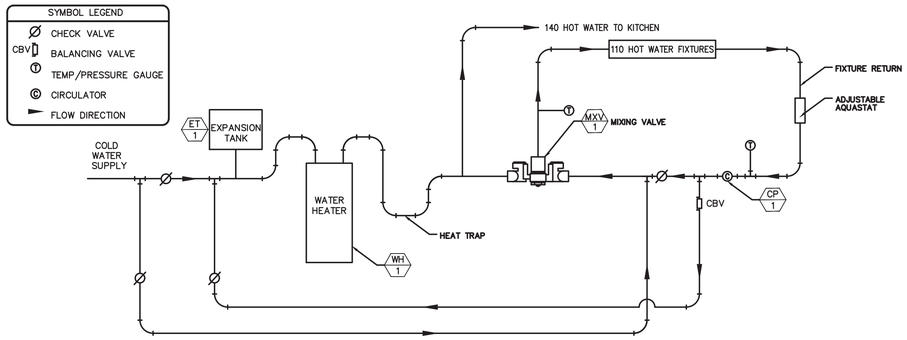

MIXING VALVE DIAGRAM (WH-1)

NOT TO SCALE

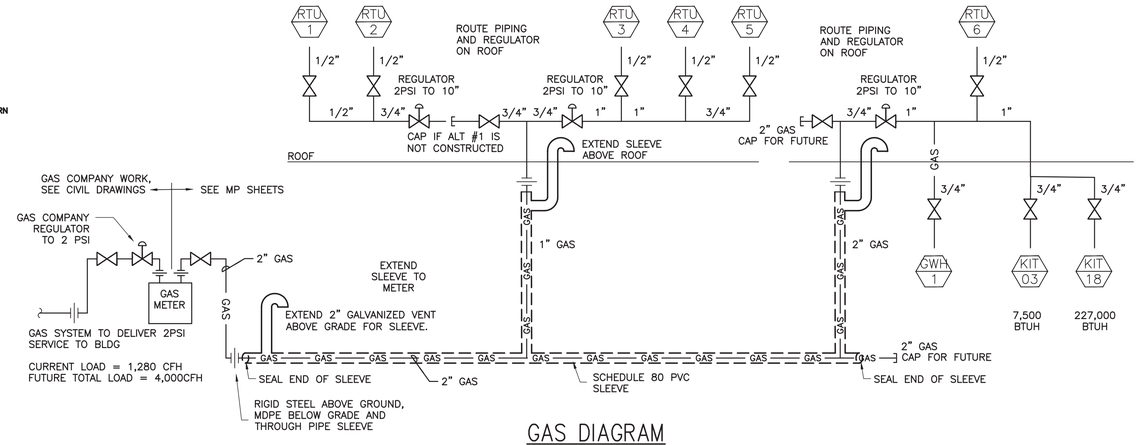

GAS DIAGRAM

NOT TO SCALE

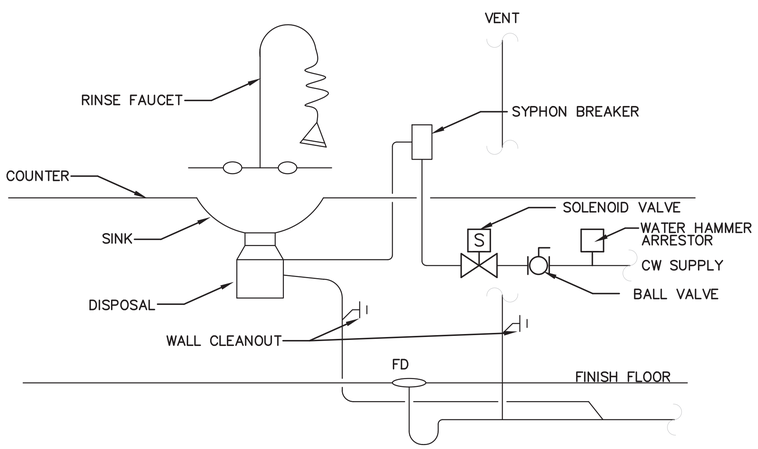

DISPOSAL PIPING DETAIL

NOT TO SCALE

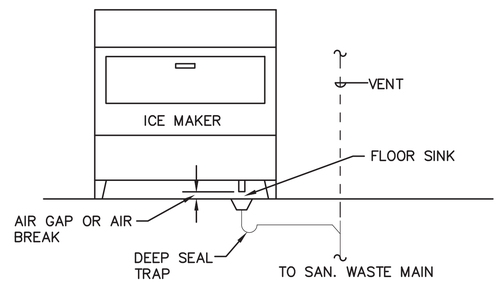

ICE MAKER DRAINAGE PIPING DETAIL

NOT TO SCALE

NOTES
1. FOR CONTINUATION OF PIPING SEE PLANS.
2. MINIMUM CHASE SPACE SHOWN MUST BE CLEAR SPACE. NO STEEL STUDS OR OTHER IMPEDIMENTS CAN BE INSTALLED IN THIS SPACE.

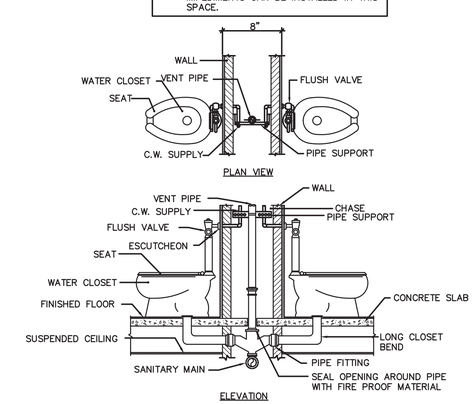

BACK-TO-BACK FLOOR MOUNTED WATER CLOSET DETAIL

NOT TO SCALE

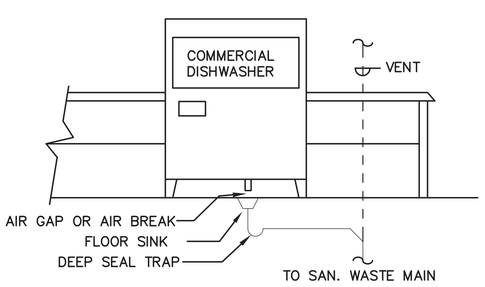

COMMERCIAL DISHWASHER DRAINAGE PIPING DETAIL

NOT TO SCALE

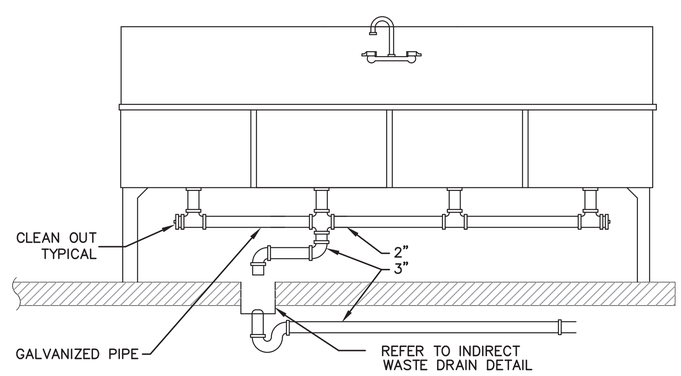

KITCHEN SINK INDIRECT DRAIN DETAIL

NOT TO SCALE

EEA CONSULTING ENGINEERS
4343 Pan American Freeway NE, Suite 239
Albuquerque, NM 87107
Main: 505.877.4499 - www.eeace.com
Project #: 2019MEP-25

G. DONALD DUDLEY AIA
ARCHITECT
ARCHITECTURE • INTERIORS • PLANNING
AIA • NCARB • LEED AP
SIMMS TOWER STUDIO 850
400 GOLD AVENUE SW
ALBUQUERQUE, NEW MEXICO 87102
TEL 505.243.8100

COLIN L. EVANS
NEW MEXICO
21314
PROFESSIONAL ENGINEER
04/13/2020

NEW BUILDING FOR:
RIO RANCHO SENIOR CENTER
CITY OF RIO RANCHO
NEW MEXICO

MARK	DATE	DESCRIPTION

GDDA PROJECT NO: 18-137
DATE: 04/13/2020
DRAWN BY: PU
CHECKED BY: CE
SET NO:
SHEET TITLE: PLUMBING DIAGRAMS

P502

PLUMBING FIXTURE SCHEDULE

MARK	DESCRIPTION	A.D.A.	FLOW RATE	FINISH	FIXTURE/TRIM MANUFACTURER & MODEL NO.	FAUCET/TRIM MANUFACTURER & MODEL NO.	INSTALLATION	NOTES & ACCESSORIES
P-1	WATER CLOSET ADA	YES	1.28 GPF	VITREOUS CHINA	AMERICAN STANDARD MADERA 3461.528	BATTERY SENSOR FLUSH VALVE AMERICAN STANDARD MODEL 6065.121	FLOOR MOUNT	FLOOR MOUNTED, FLOOR DISCHARGE. 18" SEAT HEIGHT. SEAT: AMERICAN STANDARD #5901.100
P-2	LAVATORY SINGLE SINK	YES	0.5 GPM	VITREOUS CHINA	AMERICAN STANDARD MURRO 0954	MANUAL FAUCET CHICAGO 802-VE2805-317ABCP MANUAL MIXING VALVE: BRADLEY TMA	WALL MOUNT	1-STATION SINK. ANGLED MANUAL FAUCET, WRIST BLADES. 2-HOLE FAUCET, BRADLEY TMA MIXING VALVE, WALL MOUNTING BRACKET. MOLDED UNDER-FRAME\SHIELD\BODY TO CONCEAL PIPING. SEE ARCHITECTURAL FOR MOUNTING HEIGHT. PROVIDE: STRAINER, P-TRAP, ANGLE STOPS, FAUCET
P-3	LAVATORY SINGLE SINK	YES	0.5 GPM	MOLDED SOLID SURFACE	SLOAN DESIGNER SERIES DSWD-81000	MANUAL FAUCET SLOAN EAF-900 MANUAL MIXING VALVE:	WALL MOUNT	MOLDED 1-STATION SINK. MOLDED UNDER-FRAME\SHIELD\BODY TO CONCEAL PIPING. SENSOR FAUCET, HARD WIRED POWER SUPPLY. WALL MOUNTING BRACKET. SEE ARCHITECTURAL FOR MOUNTING HEIGHT. PROVIDE: STRAINER, P-TRAP, ANGLE STOPS, FAUCET
P-4	SINK	YES	1.0 GPM	STAINLESS STEEL	ELKAY LRAD222255	T&S BRASS B-1120 1.0 GPM AERATOR: B-0199-01-F10	COUNTER MOUNTED	SINGLE BOWL DROP-IN ADA SINK 22" X 22" X 5-1/2", 18 GAUGE 304 STAINLESS STEEL WITH A SATIN FINISH, REAR CENTER DRAIN PLACEMENT, AND BOTTOM PADS. P-TRAP, ANGLE STOP, OFF SET DRAIN HOLE, 8" WIDESPREAD WITH LEVER FAUCET HANDLES, 3-HOLE
P-4C	SINK (WITH CLAY TRAP)	YES	1.0 GPM	STAINLESS STEEL	ELKAY LRAD222255	T&S BRASS B-1120 1.0 GPM AERATOR: B-0199-01-F10	COUNTER MOUNTED	SINGLE BOWL DROP-IN ADA SINK 22" X 22" X 5-1/2", 18 GAUGE 304 STAINLESS STEEL WITH A SATIN FINISH, REAR CENTER DRAIN PLACEMENT, AND BOTTOM PADS. ANGLE STOP, OFF SET DRAIN HOLE, 8" WIDESPREAD WITH LEVER FAUCET HANDLES, 3-HOLE. ACID RESISTANT COMPOSITE INTERCEPTOR, IN LIEU OF FIXTURE 'P' TRAP, FOR ON-FLOOR INSTALLATION, WITH REMOVABLE PVC SEDIMENT BUCKET HAVING A REMOVABLE PERFORATED FLOW DEFUSING THREADED LOW INLET AND HIGH OUTLET, ZURN Z1180
P-5	DRINKING FOUNTAIN - ADA		–	STAINLESS STEEL	MURDOCK MODEL A152400S	N/A	WALL MOUNTED DUAL HEIGHT	BARRIER FREE, CONCEALED ARM WALL CARRIER, 32" TRIM PLATE, STAINLESS STEEL BUBBLER, P-TRAP, ANGLE STOP.
P-6	MOP SINK	-	-	COMPOSITE	FIAT TSBC1610	CHICAGO FAUCETS 445-PVBCP	ON FLOOR (24"x24"x10") WALL FAUCET	TERRAZZO CORNER 12" DEEP SINK WITH 6" DROP FRONT. WALL FAUCET WITH PRESSURE VACUUM BREAKER, ADJUSTABLE ARM, CHROME PLATED, BUCKET HOOK + SUPPORT, 3/4" MALE HOSE CONNECTION, BLEED OFF + FLOW VALVE, LEVER HANDLES. PROVIDE: HOSE, HOSE HOLDER, MOP HANGER, BUMPER GUARDS, WALL GUARDS.
P-7	URINAL	YES	0.125 GPF	VITREOUS CHINA	AMERICAN STANDARD DECORUM 6042.633	INCLUDES BATTERY SENSOR FLUSH VALVE AMERICAN STANDARD MODEL SELECTRONIC	WALL MOUNT	MODERN, ROUNDED MODEL. SEE ARCH. DRAWINGS FOR MOUNTING HEIGHT.
DS	DOWNSPOUT NOZZLE	-	-	ALUMINUM	ZURN ZF199	N/A	WALL	ROUND WITH PERFORATED FLAPPER.
FCO	FLOOR CLEANOUT	-	-	BRASS	JAY R. SMITH MRG. CO. 4020-4034	-	-	PROVIDE ROUND TOP
FD	FLOOR DRAIN (ROUND)	-	-	NICKEL BRONZE TOP	JAY R. SMITH MRG. CO. 2005-xx-05-A	JAY R. SMITH MRG. CO. QUAD CLOSE TRAP SEAL 2692BS, COORDINATE	RECESSED IN FLOOR	PROVIDE TRAP SEAL DEVICE IN LIEU OF TRAP PRIMER. 5"ROUND GRATE,
FS	FLOOR SINK	-	-	NICKEL BRONZE TOP	JAY R. SMITH MRG. CO. 3100-12	JAY R. SMITH MRG. CO. QUAD CLOSE TRAP SEAL 2692BS, COORDINATE	RECESSED IN FLOOR	4" SIZE WITH 1/2" FLOOR GRATE
GI	GREASE INTERCEPTOR		–	POLYETHYLENE	SCHIER GB-50	INTERCEPTOR, ANTI-SIPHON, FLOW CONTROL, TEST CAPS.	OUTDOORS IN-GROUND	RATED FOR MINIMUM 40 GPM, 3" INLET & OUTLET.
HB	HOSEBIB	-	-	CHROME	WOODFORD MODEL B24	N/A	RECESS IN WALL	PROVIDE WITH VACUUM BREAKER, 3/4" MALE HOSE THREAD, RECESSED WALL BOX. CHROME FINISH.
MXV	THERMOSTATIC MIXING VALVE		–	BRASS	ACORN CONTROLS MODEL MV17-2	N/A	AT WATER HEATER	THERMOSTATIC MIXING VALVE CAPABLE OF 26 GPM @ 15 PSID, 3/4" INLETS, 1" OUTLET W/ OPTIONAL OGT OUT LET TEMP. GAUGE.
RD	COMBINATION DUAL OUTLET PRIMARY AND OVERFLOW DRAIN	-	-	CAST IRON	ZURN Z100C	N/A	ROOF	COMBINATION PRIMARY AND OVERFLOW DRAIN - CONCENTRIC STYLE. PROVIDE UNDER-DECK CLAMP, DECK EXTENSION, CAST IRON DOME. COORDINATE FINAL DIMENSIONS AND ACCESSORIES WITH ARCHITECTURAL DETAILS AND IN FIELD WITH ROOF CONDITIONS.
SA	SHOCK ARRESTER	-	-	COPPER	ZURN WILKINS		PLUMBING CHASE	PROVIDE WITH BALL VALVE SHUT OFF
WCO	WALL CLEANOUT	-	-	BRASS	JAY R. SMITH MRG. CO. 4530S	-	-	-
WH	WALL HYDRANT	-	-	CHROME	WOODFORD B67BR	N/A	WALL MOUNT	ANTI-SIPHON (VACUUM BREAKER) FREEZE LESS, FLUSH WITH BACKBOX, KEY OPERATED
WB	ICE MAKER WALL BOX	-	-	PLASTIC	IPS - WATER TITE AB9702	N/A	WALL MOUNT	PROVIDE 1/2" CONNECTIONS AND 1/4 TURN VALVE

NOTES:
ALL FIXTURES TO HAVE WATER SENSE LABELING. ALL WALL MOUNTED FIXTURES SHALL HAVE CONCEALED WALL CARRIERS. ALL ADA SINKS SHALL BE PROVIDED WITH "TRUEBRO" PIPE WRAP KITS FOR ALL EXPOSED ITEMS BELOW SINKS. OPEN FRONT TOILET SEATS, STOPS, SUPPLY TUBES, WASTE FIX DRAIN TUBES.

CP #

DOMESTIC HOT WATER RECIRCULATION PUMP SCHEDULE

EQUIP. NO.	SERVICE	LOCATION	FLOW (GPM)	HEAD (FT)	CONNECTION SIZE (IN)	POWER (WATTS)	ELECTRICAL V-PH-CY	MANUFACTURER & MODEL	OPTIONS – ACCESSORIES
1	RECIRC	PATIO STORAGE	2.2	3.9	1/2	8	115–1–60	GRUNDFOS – COMFORT PM AUTO UP TO 10–16	ADJUSTABLE AQUA STAT. SEE MIXING VALVE DIAGRAM FOR PIPING LAY–OUT.

NOTES: ALL MANUFACTURERS LISTED ARE FOR BASIS OF DESIGN ONLY. "OR EQUAL" PRODUCTS ARE ALLOWED.

GAS WATER HEATER SCHEDULE

ITEM NO.	LOCATION	CAPACITY GALLON	TYPE	RECOVERY @100 F (GPH)	INPUT BTU PER HR.	WATER CONN.	ENERGY FACTOR	GAS PIPE (IN)	EFFICIENCY %	ELECTRICAL V.–PH.–CY.	ELECTRICAL WATTS	MANUFACTURER & MODEL	REMARKS
1	JANITOR	100	GAS STORAGE POWER VENT	193 GPH	199	1–1/2"	0.8	1/2"	97	120–1–60	< 5.0	A.O SMITH–BTR–198	TRINITRON INTELLIGENT, HIGH–EFFICIENT SEALED COMBUSTION DOMESTIC WATER HEATER. EXTEND VENT AND COMBUSTION AIR UP THROUGH ROOF. COORDINATE 120V POWER CIRCUIT. PROVIDE EXPANSION TANK, CIRCULATOR PUMP. SEE DETAIL.

EEA CONSULTING ENGINEERS
4343 Pan American Freeway NE, Suite 239
Albuquerque, NM 87107
Main: 505.877.4499 - www.eeace.com
Project #: 2019MEP-25

G. DONALD DUDLEY AIA
ARCHITECT
ARCHITECTURE • INTERIORS • PLANNING
AIA • NCARB • LEED AP
SIMMS TOWER STUDIO 850
400 GOLD AVENUE SW
ALBUQUERQUE, NEW MEXICO
87102
TEL 505.243.8100

COLIN L. EVANS
NEW MEXICO
21314
PROFESSIONAL ENGINEER
04/13/2020

NEW BUILDING FOR:
RIO RANCHO
SENIOR CENTER
CITY OF RIO RANCHO
NEW MEXICO

MARK	DATE	DESCRIPTION

GDDA PROJECT NO: 18–137
DATE: 04/13/2020
DRAWN BY:
CHECKED BY:
SET NO:
SHEET TITLE: PLUMBING SCHEDULE

P601

SHEET LIST

- FP001: FIRE PROTECTION LEGEND & SPECIFICATIONS
- FP101: FIRE PROTECTION PLANS

FIRE PROTECTION PERFORMANCE SPECIFICATIONS

FOR CONTRACTOR TO DETERMINE:

HAZARD CLASSIFICATION (EXISTING AND NEW)

SPRINKLER ORIFICE SIZE

SPRINKLER TEMPERATURE RATING

MINIMUM DESIGN DENSITY (GPM/SQ. FT.)

DESIGN AREA (SQ. FT.)

1. ANY VARIATION OF THE SPECIFICATIONS INTENT OR APPARENT CONFLICT FROM THIS SPECIFICATION SHALL BE SUBMITTED TO THE ARCHITECT/ENGINEER FOR WRITTEN RESPONSE. THE RESPONSE SHALL BE INCORPORATED INTO THE DRAWINGS AND SHALL BE THE FINAL WORD ON THE ITEM. THE CONTRACTOR SHALL INCORPORATE ANY CHANGE AT NO CHARGE TO THE OWNER.

2. DESIGN
   - A. THE DESIGNER OF THE FIRE PROTECTION SYSTEMS SHALL MEET ONE OF THE REQUIREMENTS BELOW.
     - i. A REGISTERED PROFESSIONAL FIRE PROTECTION ENGINEER IN THE STATE OF NEW MEXICO.
     - ii. MINIMUM NATIONAL INSTITUTE FOR CERTIFICATION IN ENGINEERING TECHNOLOGIES (NICET) LEVEL III FOR WET-PIPE OR DRY-PIPE, ORDINARY HAZARD, GROUP II SPRINKLER SYSTEMS, REGARDLESS OF SIZE.
     - iii. MINIMUM NICET LEVEL IV FOR ALL OTHER TYPES OF SYSTEMS, INCLUDING SPECIAL HAZARD PROTECTION.
     - iv. WHERE NICET DESIGN IS USED, COPIES OF THE DESIGNER'S CERTIFICATES FROM NICET SHALL BE SUBMITTED ALONG WITH THE DRAWINGS FOR APPROVAL. THE REGISTERED PROFESSIONAL ENGINEER SHALL STAMP ALL OTHER PLANS.
   - B. THE CONTRACTOR IS RESPONSIBLE FOR THE DESIGN AND INSTALLATION OF THE FIRE PROTECTION SYSTEM IN ACCORDANCE WITH THESE SPECIFICATIONS AND THE CONTRACT DRAWINGS. THE CONTRACTOR SHALL COORDINATE WITH ARCHITECTURAL, CIVIL, MECHANICAL, AND ELECTRICAL, DESIGN AND CONSTRUCTION DOCUMENTS, TO ASCERTAIN THE REQUIRED INFORMATION, TO AFFECT A PROPERLY DESIGNED FIRE PROTECTION SYSTEM FOR THE BUILDING CONSTRUCTION AND OCCUPANCY CLASSIFICATION.
     - i. THE CONTRACTOR IS RESPONSIBLE TO DESIGN THE AUTOMATIC SPRINKLER SYSTEM IN ACCORDANCE WITH THESE SPECIFICATIONS AND THE CONTRACT DRAWINGS. THE CONTRACTOR SHALL REFER TO ALL ARCHITECTURAL, MECHANICAL, AND ELECTRICAL DRAWINGS, TO ASCERTAIN THE REQUIRED INFORMATION, TO AFFECT A PROPERLY DESIGNED SPRINKLER SYSTEM FOR THE BUILDING CONSTRUCTION AND OCCUPANCY CLASSIFICATION.
   - A. THE DESIGN OF FIRE PROTECTION SYSTEMS SHALL BE COMPLETE WITH ALL NECESSARY ACCESSORIES FOR PROPER OPERATION AND SHALL INCLUDE SEISMIC SUPPORT DETAILS.
   - B. THE FIRE PROTECTION WATER SUPPLY LINES, CONTROLLING DEVICES, PROTECTIVE DEVICES, ALARM SYSTEMS, SUPERVISORY DEVICES, AND RELATED EQUIPMENT SHALL BE COMPATIBLE SO THAT ALL EQUIPMENT WILL FUNCTION TOGETHER AS SPECIFIED.
   - C. THE DESIGN SHALL COMPLY WITH ALL MANDATORY, ADVISORY INTERPRETATIONS, AND RECOMMENDED APPLICABLE RULES OF THE LATEST EDITIONS OF THE LOCALLY ENFORCED CODES AND STANDARDS.
   - D. THE CONTRACTOR SHALL PRODUCE DESIGN DRAWINGS THAT INDICATE THE EXTENT AND ARRANGEMENT OF THE FIRE PROTECTION SYSTEM.
   - E. THE CONTRACT DRAWINGS INDICATE THE EXTENT AND GENERAL ARRANGEMENT OF THE EXISTING AUTOMATIC SPRINKLER SYSTEMS.

3. SEISMIC PROTECTION
   - A. SEISMIC PROTECTION FOR AUTOMATIC SPRINKLER SYSTEMS IS REQUIRED FOR ALL NEW SYSTEMS. MODIFICATIONS TO EXISTING SYSTEMS SHALL REQUIRE SEISMIC PROTECTION.
   - B. FOR MODIFICATIONS TO EXISTING SYSTEMS, SEISMIC PROTECTION WILL BE REQUIRED FOR ONLY THAT PORTION OF THE SYSTEM BEING MODIFIED, AND THE FEEDMAIN SUPPLYING THE MODIFICATION AREA.
   - C. SEISMIC SEPARATION JOINTS ARE REQUIRED IN AREAS SEPARATING THE MODIFIED AREA OF THE SPRINKLER SYSTEM AND THAT AREA WHICH IS NOT TO BE UPGRADED FOR SEISMIC PROTECTION.
   - D. THE INSTALLATION GUIDELINES FOR SEISMIC PROTECTION IN NFPA 13 SHALL BE USED. WHERE AN ALTERNATIVE METHOD (OTHER THAN NFPA 13) OF PROVIDING SEISMIC PROTECTION OF A SPRINKLER SYSTEM IS TO BE USED, ONLY UL LISTED OR FM APPROVED MATERIAL SHALL BE PERMITTED. THE ALTERNATIVE METHOD SHALL HAVE A DESIGN BASED ON A DYNAMIC SEISMIC ANALYSIS CERTIFIED BY A REGISTERED PROFESSIONAL ENGINEER IN THE STATE OF NEW MEXICO AND THE REGISTERED PE SHALL STAMP ALL DRAWINGS.

4. PROTECTION OF AREAS SUBJECT TO FREEZING
   - A. HORIZONTAL DRY SIDEWALL SPRINKLERS SHALL BE USED IN LIEU OF ANTIFREEZE LOOPS FOR NARROW UNHEATED AREAS ADJACENT TO HEATED AREAS, SUCH AS DOCKS, COVERED LOADING PLATFORMS, OR OTHER STORAGE SHEDS. THE DEPTH OF DRY SIDEWALL SPRINKLER PROTECTED SPACE SHALL NOT EXCEED 10 FEET.
   - B. ALL ANTI-FREEZE SYSTEMS REQUIRE THE INSTALLATION OF A REDUCED PRESSURE BACKFLOW PREVENTION (RPBFP) DEVICE. IF A RPBFP IS INSTALLED ON THE ENTIRE SPRINKLER SYSTEM, THEN NO ADDITIONAL RPBFP IS REQUIRED FOR THE ANTI-FREEZE SYSTEM.
   - C. GRIDDED OR LOOPED DRY PIPE OR PREACTION SYSTEMS ARE NOT ALLOWED. THE DESIGN FOR THESE SYSTEMS SHALL BE OF THE CONVENTIONAL TREE DESIGN.
   - D. ALL DRY-PIPE SYSTEMS, REGARDLESS OF THE VOLUME, ARE REQUIRED TO DELIVER SUSTAINED WATERFLOW TO THE INSPECTOR'S TEST CONNECTION WITHIN 60 SECONDS OF THE OPENING OF THE INSPECTOR'S TEST VALVE. ALL DRY PIPE SYSTEMS IN EXCESS OF 500 GALLONS SHALL BE PROVIDED WITH A UL LISTED OR FM APPROVED QUICK OPENING DEVICE, EXCEPTIONS TO NFPA 13 IN THIS INSTANCE DO NOT APPLY.
   - E. SPRINKLER PIPING PASSING THROUGH ANY UNHEATED SPACES IN, UNDER, OR OUTSIDE BUILDINGS EXPOSED TO FREEZING, SHALL BE PROTECTED IN ACCORDANCE WITH THE METHODS SPECIFIED IN NFPA 13. EXPOSED TO FREEZING IS DEFINED AS ANY LOCATION WHERE THE TEMPERATURE MAY DROP BELOW (40°F) 5°C AT ANY TIME DURING THE YEAR.

5. SUBMITTALS
   - A. SHOP DRAWING SUBMITTALS
     - i. PROVIDE AS REQUIRED BY DIVISION 1, DESCRIPTIVE SUBMITTALS, TO THE ARCHITECT/ENGINEER.
     - ii. AS SOON AS PRACTICABLE AFTER AWARD OF CONTRACT AND PRIOR TO FABRICATION, CONTRACTOR SHALL SUBMIT TO THE ARCHITECT/ENGINEER FOR APPROVAL, COMPLETE SHOP DRAWINGS, MANUFACTURERS' CATALOG DATA, SYSTEM AND COMPONENT OPERATING INSTRUCTIONS AND HYDRAULIC CALCULATIONS FOR THE SPRINKLER SYSTEM AND UNDERGROUND PIPING SHOWN ON PLOT PLANS.
     - iii. NO INSTALLATION WILL BE PERMITTED PRIOR TO THE ARCHITECT/ENGINEER APPROVAL OF COMPLETE SHOP DRAWINGS.
   - B. DRAWINGS SHALL SHOW ALL DETAILS REQUIRED AND RECOMMENDED BY NFPA 13, FOR "WORKING PLANS" IN ADDITION TO THE FOLLOWING:
     - i. A NAME OR ROOM NUMBER SHALL APPEAR IN EACH ROOM; AND A SCALED KEY PLAN, ORIENTED THE SAME AS THE FLOOR PLAN, SHALL APPEAR ON EACH PARTIAL PLAN SHEET.
     - ii. ALL OBSTRUCTIONS TO THE SPRINKLER LAYOUT SHALL BE SHOWN, INCLUDING BUT NOT LIMITED TO, HVAC DUCTS, LIGHTING, ELECTRICAL BUSS DUCTS.
     - iii. BUILDING COLUMN LINES SHALL BE LABELED.
     - iv. EXISTING WORK AND NEW CONSTRUCTION SHALL BE CLEARLY DIFFERENTIATED ON THE DRAWINGS (WHERE APPLICABLE).
     - v. ALL LINES AND DETAILS SHALL BE DRAWN; "OPPOSITE HAND" OR MIRROR IMAGE IS NOT ACCEPTABLE -- SEPARATE DRAWINGS SHALL BE MADE.
     - vi. ALL PIPE LENGTHS SHALL BE SHOWN, CENTER-TO-CENTER OF FITTINGS.
     - vii. WHERE MORE THAN ONE TYPE OF PIPE IS USED, EACH PIECE OF PIPE SHALL BE IDENTIFIED AS TO TYPE ON THE DRAWINGS.
     - viii. THE DRAWINGS SHALL BE KEPT NEAT AND WELL ARRANGED, WITH LEGIBLE NOTES AND FIGURES TO PERMIT PHOTOGRAPHIC REDUCTION TO ONE HALF SIZE OR SMALLER.
     - ix. NO LETTERING SHALL BE SMALLER THAN 1/8 INCH.
   - C. AS-BUILT DRAWINGS
     - i. UPON COMPLETION OF THE WORK, THE CONTRACTOR SHALL REVISE ALL DRAWINGS TO AGREE WITH THE CONSTRUCTION AS ACTUALLY ACCOMPLISHED. THE NOTATION "AS-BUILT" SHALL BE ENTERED IN THE REVISION BLOCK, DATED AND INITIALED.
     - ii. THE AS-BUILT DRAWINGS SHALL SHOW THE ENTIRE SPRINKLER SYSTEM AS IT EXISTED AT THE COMPLETION OF THE CONTRACT WORK.
     - iii. THE ORIGINAL AS-BUILT DRAWINGS SHALL BE DELIVERED AS DIRECTED BY THE ARCHITECT/ENGINEER.

6. WARRANTY: ALL SPRINKLER SYSTEM COMPONENTS FURNISHED UNDER THIS CONTRACT SHALL BE GUARANTEED AGAINST DEFECTIVE DESIGN, MATERIALS, AND WORKMANSHIP FOR THE FULL WARRANTY TIME, WHICH IS STANDARD WITH THE MANUFACTURER AND/OR SUPPLIER, BUT IN NO CASE LESS THAN ONE YEAR FROM THE DATE OF SYSTEM ACCEPTANCE.

7. POSITION AND FINISH
   - A. SPRINKLERS INSTALLED ON EXPOSED PIPING SHALL BE MANUFACTURER'S STANDARD FINISH PENDENT SPRINKLERS. SPRINKLERS AND ESCUTCHEONS INSTALLED BELOW DROPPED CEILINGS SHALL HAVE A FINISH MATCHING THE COLOR OF THE CEILING TILE. ONLY FACTORY APPLIED FINISHES SHALL BE ACCEPTABLE. IF THE FACTORY HAS A FINISH THAT CANNOT MATCH THE CEILING TILE COLOR, STANDARD FINISH SPRINKLERS ARE ALLOWED.
   - B. IN ROOMS WHERE SPRINKLER HEADS PENETRATE A SUSPENDED CEILING, ONLY QUICK RESPONSE, SEMI-RECESSED OR RECESSED SPRINKLERS ARE ACCEPTABLE. STANDARD PENDANT SPRINKLERS WITH "CUP AND SKIRT" ESCUTCHEONS, ONE-PIECE ESCUTCHEONS, OR FLUSH OR CONCEALED SPRINKLERS ARE NOT ALLOWED.
   - C. EXCEPTION: ON EXISTING INSTALLATIONS ONLY, WHERE SPRINKLER HEAD RELOCATIONS OR SMALL MODIFICATIONS (LESS THAN 20 HEADS) TAKE PLACE, THE NEW SPRINKLERS AND ESCUTCHEONS SHALL MATCH THE EXISTING SPRINKLERS.
   - D. ESCUTCHEONS, HEAD GUARDS, AND WATER SHIELD FROM THE SUPPLIED SPRINKLER MANUFACTURER SHALL BE USED SOLELY WITH THE INSTALLED SPRINKLER. NO AFTER MARKET ESCUTCHEONS, HEAD GUARDS, OR WATER SHIELDS ARE ALLOWED.
   - E. HEAD GUARDS SHALL BE TWO-PIECE, UNIVERSAL ATTACHMENTS, BOLTED IN PLACE ON THE SPRINKLER. "SNAP-ON" ONE-PIECE UNITS ARE NOT ALLOWED.

8. PIPE
   - A. PIPE FOR INSTALLATION ABOVE GROUND SHALL BE METAL CONFORMING TO THE REQUIREMENTS OF NFPA 13. NO PLASTIC PIPE IS PERMITTED IN ANY LOCATION WHETHER OR NOT PERMITTED BY NFPA. PIPE SHALL BE LISTED BY UL AND BE FM APPROVED, AND INSTALLED PER ITS LISTING AND APPROVAL AND MEET THE FOLLOWING REQUIREMENTS:
   - B. MECHANICAL ROLLED GROOVE PIPE OR CUT GROOVE PIPE SHALL NOT BE USED AT FIRE PROTECTION RISERS OR FOR SEGMENTED ARCS. USE SWING JOLT AT LOCATIONS OF SEGMENTED ARCS.
   - C. UNLESS OTHERWISE SPECIFIED, THE MINIMUM STEEL PIPE WALL THICKNESS SHALL BE SCHEDULE 10 FOR PIPE SIZES 3 INCHES OR LARGER. PIPE SIZES SMALLER THAN 3 INCHES SHALL BE SCHEDULE 40. THREADED OR CUT GROOVE STEEL PIPE SHALL BE SCHEDULE 40 FOR SIZES LESS THAN 8 INCHES AND A MINIMUM OF SCHEDULE 30 IN SIZES 8 INCHES AND LARGER FOR PRESSURES UP TO 300 PSI.
   - D. MECHANICAL ROLLED GROOVE PIPE OR WELDED PIPE SHALL BE A MINIMUM OF SCHEDULE 10 FOR SIZES 3 INCHES UP TO 5 INCHES, 0.134-INCH WALL THICKNESS FOR 6 INCHES, AND 0.188-INCH WALL THICKNESS FOR 8- AND 10-INCH PIPE FOR PRESSURES UP TO 300-PSI.
   - E. STEEL PIPE, INSTALLED FOR THE WATER MOTOR ALARM LINE, PIPING FROM DRAIN LINE VALVES AND INSPECTOR'S TEST VALVES, DRY PIPE AND PREACTION SPRINKLER SYSTEM PIPING, AND WHERE PIPE IS EXPOSED TO OUTDOOR WEATHER, ETC., SHALL BE INTERNALLY AND EXTERNALLY GALVANIZED. GALVANIZED FITTINGS ARE REQUIRED WHERE GALVANIZED PIPING IS USED. ANY PIPING LEADING TO A PRESSURE-OPERATED WATERFLOW INDICATION DEVICE SHALL ALSO BE GALVANIZED. THE STARTING POINT IS ON THE ALARM CONNECTION TO THE ALARM CHECK VALVE.
   - F. MECHANICAL ROLLED GROOVE PIPE OR CUT GROOVE PIPE SHALL NOT BE USED AT FIRE PROTECTION RISERS OR FOR SEGMENTED ARCS. USE SWING JOLT AT LOCATIONS OF SEGMENTED ARCS.

9. PIPE FITTINGS
   - A. PIPEFITTINGS FOR INSTALLATION ABOVE GROUND SHALL CONFORM TO THE REQUIREMENTS OF NFPA 13 AND SHALL BE FM APPROVED OR UL LISTED.
   - B. MECHANICAL GROOVE COUPLINGS ARE REQUIRED ON ALL 4 INCHES AND LARGER PIPE.
   - C. PLAIN-END PIPE COUPLINGS SHALL NOT BE USED IN ANY NEW INSTALLATION.
   - D. GALVANIZED PIPEFITTINGS SHALL BE INSTALLED WHERE GALVANIZED PIPING IS SPECIFIED.
   - E. WELDED BRANCH OUTLET FITTINGS (WELD-O-LETS, GROOVE-O-LETS, ETC) SHALL BE MINIMUM SCHEDULE 10 FOR PIPE SIZES 3 INCHES OR LARGER. PIPE SIZES SMALLER THAN 3 INCHES SHALL BE SCHEDULE 40 STANDARD WALL PIPE THICKNESS.
   - F. WELDED OUTLETS SHALL BE UL LISTED OR FM APPROVED, AFFIXED WITH THE UL OR FM IDENTIFICATION STAMPS, AND PRESSURE RATED FOR 300-PSI MAXIMUM.
   - G. ADJUSTABLE, TWO-PIECE DROP NIPPLES SHALL NOT BE USED. ALL DROP NIPPLES SHALL BE ONE-PIECE, NON-ADJUSTABLE UNITS WITH A MINIMUM 1-INCH DIAMETER.

10. PIPE HANGERS, SUPPORTS AND SEISMIC BRACING - PIPE HANGERS, AND HANGAR ASSEMBLIES SHALL BE UL LISTED OF FM APPROVED.
    - A. C-CLAMPS AND BEAM CLAMPS SHALL HAVE LOCK NUTS AND RETAINING STRAPS, OR CLIPS, AND PIPE RINGS SHALL BE OF THE SOLID-BAND ADJUSTABLE SWIVEL TYPE.
    - B. PROVIDE ROD-CEILING PLATES AT FINISHED CEILINGS FOR COACH SCREW RODS, EXPANSION SHIELDS, AND TOGGLE HANGERS.
    - C. ALL SEISMIC BRACING DEVICES AND FLEXIBLE COUPLINGS SHALL BE SPECIFICALLY UL LISTED OR FM APPROVED AND INSTALLED PER THEIR LISTING OR APPROVAL.
    - D. WHEN FASTENING HANGARS TO PURLINS, BOLT-THROUGH FASTENING METHODS SHALL BE USED. BEAM CLAMPS WITH RESTRAINING STRAPS SHALL NOT BE USED IN ANY CIRCUMSTANCE.
    - E. ALL SEISMIC BRACE MEMBERS SHALL BE CONTINUOUS. UNDER NO CIRCUMSTANCES SHALL MEMBERS BE SPLICED OR OFFSET.
    - F. TENSION-ONLY SEISMIC BRACING SYSTEMS SHALL MEET THE FOLLOWING.
      - i. THE TENSION-ONLY SYSTEM SHALL BE UL OR FM APPROVED FOR SEISMIC SERVICE, AND INSTALLED IN ACCORDANCE WITH LISTING LIMITATIONS AND INSTALLATION INSTRUCTIONS.
      - ii. A MEANS TO PREVENT VERTICAL MOTION DUE TO SEISMIC FORCES SHALL BE INSTALLED AT THE BRACE LOCATION.
      - iii. TWO TENSION ONLY BRACES SHALL BE INSTALLED IN OPPOSING DIRECTIONS AT EACH BRACE LOCATION.

11. INSTALLATION
    - A. THE INSTALLATION OF THE AUTOMATIC SPRINKLER SYSTEM SHALL BE COMPLETE WITH ALL NECESSARY ACCESSORIES FOR PROPER OPERATION AND SHALL BE ACCOMPLISHED BY A LICENSED SPRINKLER CONTRACTOR OR LICENSED COMPANY REGULARLY ENGAGED IN THIS TYPE OF WORK, AND IN ACCORDANCE WITH REQUIREMENTS OF THE NATIONAL FIRE PROTECTION ASSOCIATION STANDARDS (NFPA).
    - B. AN INDIVIDUAL WITH A MINIMUM NICET LEVEL II SHALL SUPERVISE THE INSTALLATION.
    - C. THE FIRE PROTECTION SYSTEM INSTALLATION SHALL BE COORDINATED WITH THE OTHER TRADES (MECHANICAL, ELECTRICAL AND STRUCTURAL, ETC.).
    - D. THE INSTALLATION SHALL COMPLY WITH ALL MANDATORY, ADVISORY INTERPRETATIONS, AND RECOMMENDED APPLICABLE RULES OF THE LATEST EDITIONS OF THE STANDARDS LISTED IN SECTION 1.3 OF THIS DOCUMENT, EXCEPT WHERE OTHERWISE NOTED ON THE DRAWINGS OR SPECIFIED HEREIN.
    - E. THE CUTTING OF STRUCTURAL MEMBERS FOR THE PASSAGE OF SPRINKLER PIPING OR FOR PIPE-HANGER FASTENINGS IS NOT PERMITTED.
    - F. CEILING AREAS: WHERE SUSPENDED CEILINGS ARE INSTALLED, THE SPRINKLER CONTRACTOR SHALL INSTALL PENDENT SPRINKLERS AS SHOWN ON THE REFLECTED CEILING PLANS. WHERE THESE PLANS DO NOT SPECIFY THE LOCATION OF THE PENDENT SPRINKLERS, THE CONTRACTOR SHALL OBTAIN THE REFLECTED CEILING PLANS AND DESIGN SPRINKLER LOCATIONS AT LEAST SIX INCHES FROM CEILING TILE EDGES, 2 FEET 6 INCHES FROM HVAC SUPPLY AND RETURN LOUVERS, DIMENSION THE LOCATIONS, FOLLOW A REPETITIVE PATTERN, AND LOCATE SPRINKLERS ALONG STRAIGHT LINES TO THE EXTENT POSSIBLE. SWING JOINTS SHALL FEED PENDANT SPRINKLERS FROM 1-INCH OUTLET TEES IN BRANCH LINES.

12. TESTING - ABOVEGROUND TESTS:
    - A. PRIOR TO ACCEPTANCE OF THE INSTALLATION, THE CONTRACTOR SHALL SUBJECT THE SYSTEM TO THE TESTS REQUIRED BY NFPA 13 FOR THE COMPLETION OF THE CONTRACTOR'S MATERIAL AND TEST CERTIFICATE. IN ADDITION, COMPLETE OPERATING TEST OF DRY PIPE, PREACTION, DELUGE, WATER-SPRAY AND FOAM WATER SYSTEMS SHALL BE PERFORMED.
    - B. HYDROSTATIC TESTING SHALL BE PERFORMED BEFORE ANY CEILING IS INSTALLED BELOW THE SPRINKLER PIPING. EACH WATER CONTROL VALVE SHALL BE FULLY OPENED AND CLOSED UNDER WATER PRESSURE TO ENSURE PROPER OPERATION.
    - C. WHERE SPRINKLER LOCATIONS ARE ROUGHED-IN, USING PLUGGED DROP NIPPLES PROJECTING BELOW THE LEVEL OF THE FINISHED CEILING, THE HYDROSTATIC TESTING SHALL BE PERFORMED TWO TIMES.
      - i. FIRST, AFTER THE SYSTEM IS COMPLETED USING THE PLUGGED DROPS, AND BEFORE THE CEILING PANELS ARE INSTALLED.
      - ii. SECOND, AFTER THE PLUGGED DROP NIPPLES ARE CUT TO LENGTH FOR THE FINISHED CEILING, OR REPLACED WITH OTHER DROP NIPPLES OF THE CORRECT LENGTH, AND THE SPRINKLERS INSTALLED.
    - D. THE ADDITION OF SODIUM SILICATE (ALSO KNOWN AS WATER-GLASS) AND RELATED SUBSTANCES BEFORE HYDROSTATIC TESTING, TO STOP WATER LEAKAGE, IS NOT PERMITTED.
    - E. PIPE INTERIORS SHALL BE KEPT FREE OF DEBRIS.

13. DESIGN AND INSTALLATION SHALL BE IN ACCORDANCE WITH THE CURRENT ADOPTED EDITION OF NFPA-13. EXISTING UTILITIES SUCH AS HVAC AND ELECTRICAL LIGHTING SHOULD NOT BE MOVED TO INSTALL THIS SYSTEM. FIELD INTERFERENCES WHICH ALTER SPRINKLER SPACING MUST BE RESOLVED PRIOR TO INSTALLATION. IF CONFLICTING CONDITIONS ARE FOUND, CONTACT THE PROJECT MANAGER FOR RESOLUTION. VARIATIONS IN HEIGHT OF SPRINKLERS DUE TO OBSTRUCTIONS MAY BE PERMITTED.

14. ALL MATERIAL AND EQUIPMENT SHALL BE UL LISTED AND/OR FM APPROVED FOR FIRE PROTECTION SERVICE. REFER TO SPECIFIC DETAILS CONTAINED ON THIS DRAWING AND THE MANUFACTURER'S INFORMATION CONCERNING REQUIRED INSTALLATION OF ALL PIPING AND EQUIPMENT. IF DRAIN PIPING IS ADDED OR MODIFIED, CONFIGURE ALL DRAIN PIPING SO THAT WATER DRAINS TO A SAFE EXTERIOR LOCATION.

15. CONTRACTOR TO PAY FOR AND/OR OBTAIN ANY REQUIRED HYDRAULIC WATER SUPPLY CONDITIONS TEST DATA.

16. PIPE AND FITTINGS:
    - A. PIPE, 2 INCH AND SMALLER: THREADED, CARBON STEEL, SCHEDULE 40, ASTM A-795, BLACK PIPE, NOT LESS THAN 1 INCH IN DIAMETER.
    - B. PIPE, 1-1/2 INCH AND LARGER: CARBON STEEL, SCHEDULE 40, ASTM A-795, ERW OR BLACK PIPE WITH ROLL GROOVE ENDS.
    - C. FITTINGS: CAST OR MALLEABLE IRON, 150 PSI RATED, NPT ENDS, MECHANICAL GROOVED JOINT, OR FLANGED END CONNECTIONS.
    - D. EXPOSED SPRINKLER PIPING (NEW AND EXISTING) SHALL BE PAINTED WITH CORROSIVE-RESISTANT RED PAINT.

17. PROVIDE AND INSTALL UL LISTED/FM APPROVED "VICTAULIC" MECHANICAL TEES (OR APPROVED EQUAL) AS NEEDED. REFER TO LATEST "VICTAULIC" CATALOG FOR CURRENT GASKET AND HOLE DIAMETER REQUIREMENTS.

18. ALL PIPE FITTINGS (EXCEPT FOR MECHANICAL FITTINGS) SHALL BE THREADED AND SHALL BE EITHER CLASS 150 MALLEABLE IRON (CONFORMING TO ANSI B16.3) OR CLASS 125 CAST IRON (CONFORMING TO ANSI B16.3).

19. PROVIDE WALL SLEEVE WITH CLEARANCES IN ACCORDANCE WITH NFPA STANDARD 13. PACKED WITH FIBERGLASS INSULATION, WITH WALL PLATES TO COVER. IF A FIRE WALL IS PENETRATED, PROTECT IN ACCORDANCE WITH NFPA STANDARD 101, USING A RATED FIRE STOP MATERIAL.

20. PROVIDE AND INSTALL NEW UL LISTED/FM APPROVED ADJUSTABLE PIPE HANGERS, ALL THREAD ROD, CLAMPS, BRACKETS, AND "RETAINING STRAPS" WHERE REQUIRED IN THE STANDARDS.

21. EXISTING AND NEW MAIN PIPING SHALL BE SUPPORTED FROM THE LARGE BUILDING STRUCTURE MEMBERS BY EITHER PIPE HANGARS OR U BOLTS. FIELD VERIFY THAT SPACING BETWEEN HANGERS ARE 15 FEET MAXIMUM OR PROVIDE ADDITIONAL PIPE HANGERS AS REQUIRED.

22. ATTACHMENT OF PIPE HANGERS TO ROOF/STRUCTURE SHALL BE BY USE OF UL/FM BRACKETS.

23. SYSTEM SHALL BE FLUSHED AND STERILIZED IN ACCORDANCE WITH NFPA-13 AND AWWA STANDARD C601.

24. HYDROSTATIC PRESSURE TEST OF 200 PSI FOR TWO HOURS SHALL BE MADE UPON THE SPRINKLER SYSTEM. PRESSURE SHALL BE MEASURED AT THE LEVEL OF THE ALARM VALVE. LEAKAGE OF WATER SHALL NOT BE ALLOWED. TESTS AND CERTIFICATIONS SHALL CONFORM TO THE REQUIREMENTS OF NFPA-13 AND SHALL BE WITNESSED BY ALL AUTHORITIES HAVING JURISDICTION.

25. DURING CONSTRUCTION, ACTUAL INSTALLATION SHALL BE DOCUMENTED AS "AS-BUILTS" TO THE APPROVED PRINT PROVIDED BY THE FIRE PROTECTION CONTRACTOR. ONCE COMPLETED, AS-BUILT INFORMATION TO BE TRANSMITTED TO ENGINEER, ARCHITECT, AND OWNER PER CURRENT PROCEDURES.

26. PROVIDED SPLASH BLOCKS WHERE REQUIRED.

EEA CONSULTING ENGINEERS
4343 Pan American Freeway NE, Suite 239
Albuquerque, NM 87107
Main: 505.877.4499 - www.eeace.com
Project #: 2019MEP-25

G. DONALD DUDLEY AIA
ARCHITECT
ARCHITECTURE • INTERIORS • PLANNING
AIA • NCARB • LEED AP
SIMMS TOWER STUDIO 850
400 GOLD AVENUE SW
ALBUQUERQUE, NEW MEXICO
87102
TEL 505.243.8100

COLIN L. EVANS
NEW MEXICO
21314
PROFESSIONAL ENGINEER
04/13/2020

NEW BUILDING FOR:
RIO RANCHO SENIOR CENTER
CITY OF RIO RANCHO
NEW MEXICO

MARK	DATE	DESCRIPTION

GDDA PROJECT NO: 18-137

DATE: 04/13/2020

DRAWN BY: PU

CHECKED BY: CE

SET NO:

SHEET TITLE: PLUMBING LEGENDS & SPECS

FP001

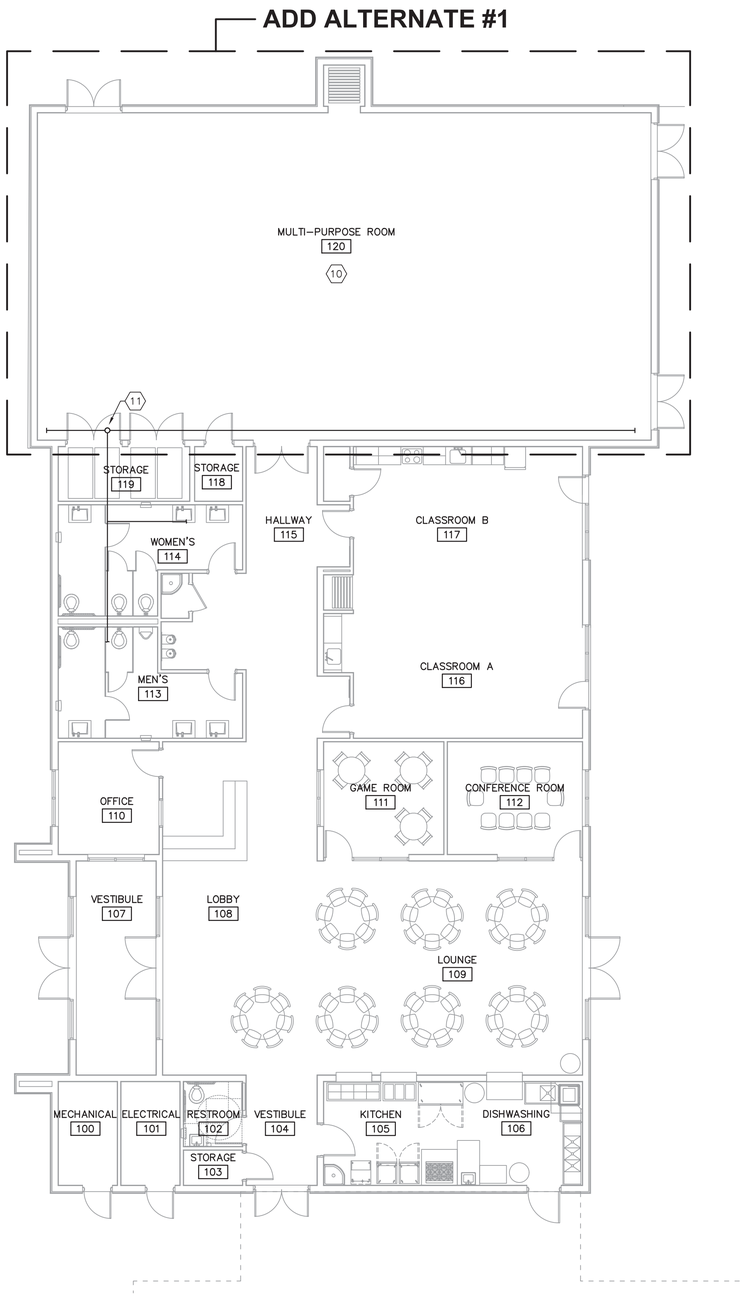

A1 FIRE PROTECTION PLAN – ADD ALTERNATE #1

1/8"=1'–0"

NORTH

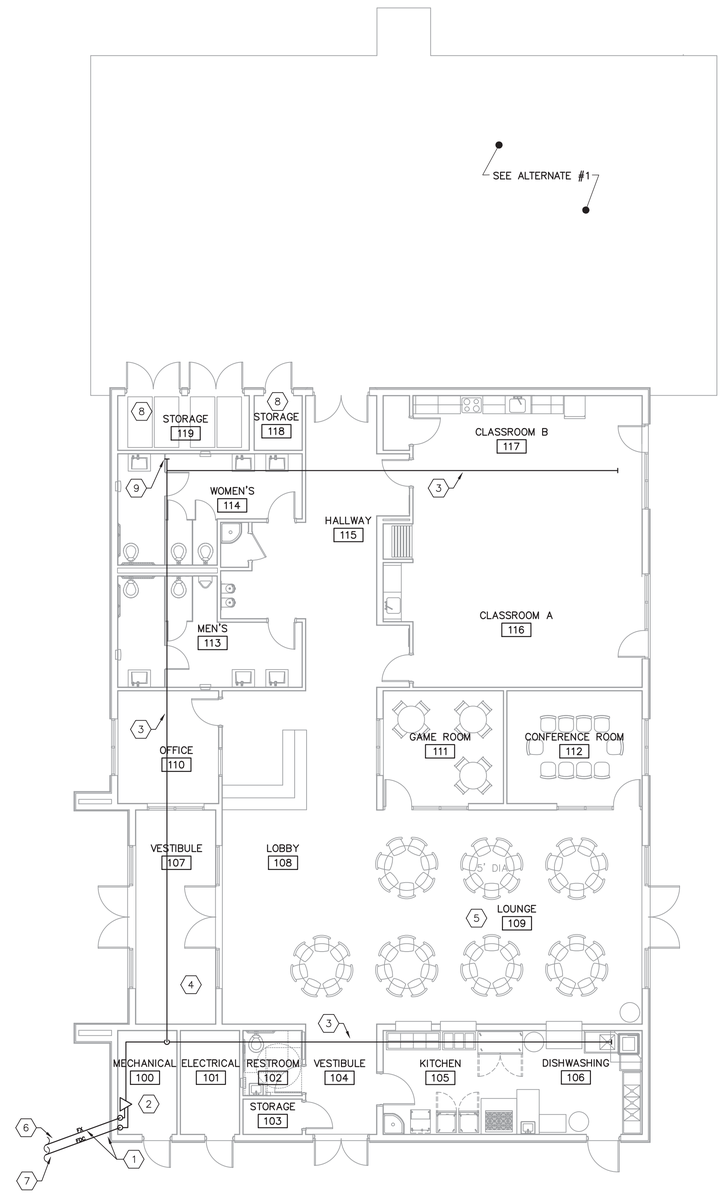

A5 FIRE PROTECTION PLAN – BASE BID

1/8"=1'–0"

NORTH

GENERAL SHEET NOTES

A. SEE FIRE PROTECTION PERFORMANCE SPECIFICATION NOTES ON FP001
B. CONTRACTOR IS RESPONSIBLE TO DEVELOP DETAILED DESIGN IN COMPLIANCE WITH NFPA–13 STANDARDS AND ALL STATE AND LOCAL AUTHORITIES.
C. COORDINATE FIRE PROTECTION WORK WITH ALL TRADES PRIOR TO INSTALLATION.
D. PROVIDE AND INSTALL INSPECTOR TEST CONNECTIONS. COORDINATE THROUGH WALL DRAINS WITH ARCHITECT AND OWNER PRIOR TO INSTALLATION.
E. IN GENERAL, ALL PIPING IS TO BE CONCEALED, EXCEPT IN MULTI–PURPOSE ROOM 120 (WHICH IS AN ALTERNATE BID, PAINT EXPOSED PIPING IN MULTI–PURPOSE ROOM 120).
F. USE FLUSH MOUNTED HEADS IN ALL HARD CEILING AREAS.

KEYNOTES

1. ROUTE PIPING BELOW GRADE
2. FIRE PROTECTION RISERS IN MECHANICAL ROOM. PROVIDE A "T" AND CAP TO FEED FUTURE SOUTH WING.
3. GENERAL ROUTING OF FIRE PROTECTION SUPPLY MAIN FOR FIRST FLOOR. SYSTEM SHALL BE HYDRAULICALLY CALCULATED AND DESIGNED TO PROVIDE PROTECTION FOR ALL ROOMS AND SPACES.
4. ROUTE FIRE PROTECTION MAIN HIDDEN IN 'SHELF' AREA ABOVE VESTIBULE, SEE ARCHITECTURAL DETAILS. THIS IS AN AREA WITH DUAL-LAYERS OF CEILING CONSTRUCTION THAT REQUIRES SPECIAL COORDINATION AND COVERAGE AT MULTIPLE LEVELS. PROVIDE PROTECTION INSIDE VESTIBULE AND ABOVE. NOTE SPECIAL COORDINATION IS REQUIRED WITH DUCTWORK.
5. PROVIDE PROTECTION IN TALL TWO-STORY LOBBY/LOUNGE AREA WITH SLOPED CEILING; SEE ARCHITECTURAL DETAILS AND STRUCTURAL DESIGN. PROVIDE DETAILED COORDINATION DRAWINGS OF ALL PIPING.
6. FIRE PROTECTION MAIN SERVICE TO BUILDING. SERVICE TO EXTEND FROM SITE HOT-BOX WITH BACKFLOW PREVENTER, SEE CIVIL DRAWINGS FOR CONTINUATION AND ROUTING.
7. FIRE PROTECTION PIPING TO REMOTE FIRE DEPARTMENT CONNECTION, SEE CIVIL DRAWINGS FOR CONTINUATION AND ROUTING.
8. IN STORAGE ROOMS 118 AND 119: BASE BID PROVIDE PRE-CHARGED DRY SPRINKLER HEADS IN ROOM; ALTERNATE BID #1 PROVIDE STANDARD WET HEADS.
9. BASE BID: PROVIDE CAPPED "T" TO FEED FUTURE MULTI-PURPOSE ROOM.
10. PROVIDE PROTECTION IN TALL MULTI-PURPOSE ROOM; SEE ARCHITECTURAL DETAILS AND STRUCTURAL DESIGN. ROUTE ALL PIPING EXPOSED.
11. RISE PIPING UP TIGHT TO WALL.

EEA CONSULTING ENGINEERS
4343 Pan American Freeway NE, Suite 239
Albuquerque, NM 87107
Main: 505.877.4499 - www.eeace.com
Project #: 2019MEP-25

G. DONALD DUDLEY AIA
ARCHITECT
ARCHITECTURE • INTERIORS • PLANNING
AIA • NCARB • LEED AP
SIMMS TOWER STUDIO 850
400 GOLD AVENUE SW
ALBUQUERQUE, NEW MEXICO
87102
TEL 505.243.8100

COLIN L. EVANS
NEW MEXICO
21314
PROFESSIONAL ENGINEER
04/13/2020

NEW BUILDING FOR:

RIO RANCHO SENIOR CENTER

CITY OF RIO RANCHO
NEW MEXICO

MARK	DATE	DESCRIPTION

GDDA PROJECT NO: 18–137

DATE: 04/13/2020

DRAWN BY: PU

CHECKED BY: CE

SET NO:

SHEET TITLE: FIRE PROTECTIONS PLANS

FP101

ELECTRICAL SPECIFICATIONS

GENERAL NOTES (APPLY TO ENTIRE PROJECT)

1. COORDINATE FINAL LOCATION OF ALL DEVICES WITH OWNER AND ARCHITECT WITH RESPECT TO MOUNTING HEIGHTS AND LOCATION OF EQUIPMENT, FURNITURE AND WALL FURNISHINGS. COORDINATE FINAL LOCATION SO AS NOT TO INTERFERE WITH EXHIBIT BOARDS, DRY MARKER BOARDS AND OTHER EXISTING OR NEW SURFACE MOUNTED ITEMS. COORDINATE FINAL LOCATION OF ALL POWER, DATA AND COMMUNICATION OUTLETS WITH OWNER PRIOR TO INSTALLATION.
2. COORDINATE LOCATION OF ALL MECHANICAL, PLUMBING AND FIRE PROTECTION EQUIPMENT WITH THE RESPECTIVE TRADE CONTRACTORS.
3. ALL NEW ELECTRICAL WIRING DEVICES ARE TO BE RECESSED (FLUSH MOUNTED) IN NEW CONCRETE MASONRY UNIT (CMU) AND STUD WALL CONSTRUCTION UNLESS NOTED OTHERWISE OR OTHERWISE DIRECTED BY OWNER.
4. PROVIDE FIRE PROOFING AT RATED WALL PENETRATIONS.
5. NOTE THAT THE IDENTIFICATION LABELS TO BE USED/MADE FOR ALL SYSTEMS MUST USE THE OWNER'S ROOM NUMBERS AND ROOM NAMES, NOT THE NUMBERS OR NAMES ON THE CONSTRUCTION DOCUMENTS. MEET WITH OWNER TO REVIEW AND CONFIRM ROOM NUMBERS AND NAMES PRIOR TO LABELING SYSTEMS.
6. ATTENTION BIDDERS – PROJECT CONSTRUCTION SCHEDULE REQUIREMENTS – INCORPORATE IN BID THE COST TO ACCOMMODATE ALL CONSTRUCTION SCHEDULE REQUIREMENTS AS REQUIRED BY SCHEDULING OF WORK DEFINED ON ARCHITECTURAL DRAWINGS AND IN DIVISION 1 SPECIFICATIONS. SUBMISSION OF BID INDICATES COMPLIANCE WITH LISTED DOCUMENTS.
7. PROVIDE 2#10AWG+1#12AWG BRANCH WIRING FOR ALL 20A BRANCH CIRCUITS LONGER THAN 100 FEET (MEASURE LENGTH OF WIRE FROM BREAKER TO FIRST CONNECTION)..
8. THE USE OF METAL CLAD WIRING (MC) IS LIMITED, REFER TO SPECIFICATION DIVISION 26.
9. COORDINATE ALL ROOF PENETRATIONS WITH MECHANICAL AND ARCHITECTURAL DETAILS.
10. COORDINATE ALL WIRING, CONNECTION AND CONTROLS FOR MECHANICAL EQUIPMENT WITH MECHANICAL AND ATC CONTRACTORS. COORDINATE LOCATION AND INSTALLATION OF CONTROL DEVICES.
11. EACH PRIME TRADE CONTRACTOR BID TO INCLUDE ALL WORK REQUIRED BY ALL OTHER TRADE DOCUMENTS ISSUED FOR THIS PROJECT, INCLUDING BUT NOT LIMITED TO ARCHITECTURAL, STRUCTURAL, CIVIL, ROOFING, MECHANICAL, PLUMBING, FIRE PROTECTION, ELECTRICAL DRAWINGS/SPECIFICATIONS/DOCUMENTS. CAREFULLY REVIEW, INCLUDE AND COORDINATE ALL WORK DIRECTED/REQUIRED BY OTHER DOCUMENTS.

ELECTRICAL COMMON NOTES (INDIVIDUALLY IDENTIFIED ON DRAWINGS)

1. PROVIDE AN ENCLOSED 120V 20A 1P RELAY ABOVE CEILING TO CONTROL LOCAL EF SO THAT EF WILL OPERATE WHEN LIGHTS ARE 'ON'. CONNECT RELAY COIL TO LIGHTING CIRCUIT. CONNECT FAN POWER CIRCUIT TO INDICATED POWER CIRCUIT. PROVIDE SNAP SWITCH TO OPERATE AS DISCONNECT SWITCH
2. PROVIDE NETWORKED LIGHTING MOTION SENSORS IN CORRIDORS. INSTALL AND GANG WIRE/NETWORK SENSORS IN CORRIDORS SO THAT SWITCH GROUPINGS CORRESPOND TO THE POWER CIRCUITING BREAK SHOWN ON THE PLANS. WIRE LIGHTS TO LOCAL KEY SWITCH. PROVIDE POWER SUPPLIES AND SWITCH PACKS AS REQUIRED. COORDINATE WITH EMERGENCY/NIGHT LIGHTS.
3. PROVIDE CABLE TRAY ABOVE LAY-IN CEILING AND (3) 3"C ABOVE HARD CEILING. SEE "LOW VOLTAGE SYSTEMS WIRING GENERAL NOTES".
4. PROVIDE LOCAL SNAP SWITCH ON UNIT/MOD TO OPERATE AS DISCONNECT SWITCH.
5. PROVIDE 120V POWER CONNECTION/GFI RECEPTACLE TO EWC. COORDINATE WIRING AND FINAL CONNECTION REQUIREMENTS WITH PC.
6. PROVIDE THREE FIRE-RATED PATHWAYS THRU WALL FOR DATA SYSTEMS, SEE "LOW VOLTAGE SYSTEMS WIRING GENERAL NOTES"
7. PROVIDE JUNCTION BOX ABOVE ACCESSIBLE CEILING WITH 120V WIRING FOR FUTURE DOOR ACCESS CONTROL SYSTEM. SEE DETAILS AND COORDINATE ACTUAL INSTALLATION REQUIREMENTS AND FINAL LOCATIONS WITH OWNER AND DOOR INSTALLER.
8. PROVIDE CONCEALED EMPTY CONDUIT FROM DOOR FRAME TO ACCESSIBLE CEILING CAVITY FOR FUTURE WIRING TO POWER HINGE & PANIC DEVICE. PROVIDE CONCEALED EMPTY CONDUIT FROM DOOR HEADER/FRAME TO CEILING ACCESSIBLE CAVITY FOR FUTURE WIRING TO CONTACT SWITCH. SEE DETAILS AND COORDINATE ACTUAL INSTALLATION REQUIREMENTS AND FINAL LOCATIONS WITH OWNER AND DOOR INSTALLER.
9. PROVIDE EXTERIOR FLUSH/RECESSED BACKBOX ADJACENT TO DOOR FOR FUTURE CARD READER; PROVIDE CONCEALED EMPTY CONDUIT FROM BACKBOX TO ACCESSIBLE CEILING CAVITY FOR FUTURE WIRING. SEE DETAILS AND COORDINATE ACTUAL INSTALLATION REQUIREMENTS AND FINAL LOCATIONS WITH OWNER AND DOOR INSTALLER.

LOW VOLTAGE SYSTEMS WIRING GENERAL NOTES:

1. SEE DRAWING E001 FOR ELECTRICAL LEGEND, GENERAL NOTES AND ELECTRICAL COMMON NOTES. SEE ET FLOOR PLANS FOR SPECIFIC LAYOUT AND NOTES FOR CABLE TRAY AND LOW VOLTAGE PATHWAYS.
2. PROVIDE CABLE TRAY ABOVE DROPPED CEILING (OR EXPOSED STRUCTURE) AS SHOWN ON PLANS; GENERALLY LOCATED IN CORRIDORS. COORDINATE EXACT LOCATION WITH ALL TRADES, CONSTRUCTION METHODS, STRUCTURE AND EQUIPMENT TO BE INSTALLED UNDER THIS PROJECT. INTERRUPT TRAY, AND PROVIDE (3) 4"C BETWEEN TRAY SECTIONS, IN LOCATIONS WHERE LARGE OBSTRUCTIONS PRECLUDE TRAY INSTALLATION. RESUME TRAY INSTALLATION PAST THE OBSTRUCTION.
3. PROVIDE CONDUIT SLEEVE(S) FOR ALL WALL PENETRATIONS FOR COMMUNICATION, DATA, AND LOW VOLTAGE SYSTEMS. COORDINATE WITH CABLE TRAY INSTALLATION.
4. PROVIDE FIRE RATED CABLE PATHWAY DEVICE(S) WITH FIRE PROOFING FOR COMMUNICATION, DATA, AND LOW VOLTAGE SYSTEMS AT WALL PENETRATION(S). BASIS OF DESIGN IS SPECIFIED TECHNOLOGIES INC. MODEL 'EZPATH'. COORDINATE WITH CABLE TRAY INSTALLATION.
5. WHERE PROVIDING CONDUIT FOR SYSTEMS WIRING, PROVIDE INSULATING BUSHING ON EACH END AND SEAL\CAULK AROUND CONDUIT PENETRATIONS. PROVIDE FIRE SEALANT AT ALL RATED WALL PENETRATIONS AND FIRE SEAL INSIDE CONDUIT AFTER INSTALLING CABLES.

ABBREVIATIONS

ABBR.	DESCRIPTION
AC	AIR CONDITIONER
AFU	AMP FUSE
CU	CONDENSING UNIT
(E)	EXISTING
EC	PRIME ELECTRICAL CONTRACTOR
EF	EXHAUST FAN
ERU	ENERGY RECOVERY UNIT
FC	FAN COIL UNIT
GFCI	GROUND FAULT CIRCUIT INTERRUPTER
HP	HEAT PUMP
HV	HEATING AND VENTILATING UNIT
SF	SUPPLY FAN
T	TAMPER RESISTANT TYPE RECEPTACLE
UV	UNIT VENTILATOR
UNO	UNLESS NOTED OTHERWISE
WP	WEATHER PROOF

"+" MOUNT 6" ABOVE COUNTER/EQUIP

"++" MOUNT HIGH ON WALL

NUMBER — X
SHEET NUMBER — X-X
PLAN OR DETAIL
SCALE: 1/4" = 1'-0"

SHEET LIST

- E-001: ELECTRICAL LEGEND & SPECIFICATIONS
- ES101: ELECTRICAL SITE PLAN
- EL111: ELECTRICAL LIGHTING PLAN
- EP101: ELECTRICAL POWER PLAN
- E102: ELECTRICAL ROOF PLAN
- E-601: ELECTRICAL DIAGRAMS
- E-701: ELECTRICAL SCHEDULES
- E-702: ELECTRICAL SCHEDULES

ELECTRICAL LEGEND

SYMB.	DESCRIPTION	SYMB.	DESCRIPTION
	LED 1'X4' LIGHT FIXTURE TYPE "____" UNO; LOWER CASE LETTERS INDICATE SWITCHING GROUP	F	FIRE ALARM HORN W/STROBE LIGHT, MOUNT 80" AFF OR 6" BELOW CEILING, WHICHEVER IS LOWER
	LED 2'X4' LIGHT FIXTURE TYPE "____" UNO; LOWER CASE LETTERS INDICATE SWITCHING GROUP	F	FIRE ALARM MANUAL PULL STATION, MOUNT 44"AFF.
	LED 2'X2' LIGHT FIXTURE TYPE "____" UNO; LOWER CASE LETTERS INDICATE SWITCHING GROUP		FIRE ALARM STROBE LIGHT, MOUNT 80" AFF OR 6" BELOW CEILING, WHICHEVER IS LOWER
		S	FIRE ALARM SMOKE DETECTOR
		H	FIRE ALARM HEAT DETECTOR
	LED HANGING LINEAR LIGHT FIXTURE TYPE "____" UNO; LOWER CASE LETTERS INDICATE SWITCHING GROUP; PROVIDE LENGTH AS SHOWN ON PLANS.	DD	FIRE ALARM DUCT DETECTOR W/REMOTE TEST AND INDICATING STATION
		DH	MAGNETIC DOOR HOLDER
	WALL SCONCE LIGHT FIXTURE TYPE " " UNO. SEE ARCHITECTURAL DRAWINGS/ELEVATIONS FOR MOUNTING HEIGHTS.	ANN	FIRE ALARM REMOTE ANNUNCIATOR
		VC	VOLUME CONTROL
	EXTERIOR WALL LIGHT FIXTURE TYPE " " UNO. MOUNTING HEIGHT AS NOTED ON PLAN. COORDINATE LOCATION WITH ARCHITECTURAL DRAWINGS/ELEVATIONS.	AV	AUDIO VISUAL OUTLET – PROVIDE BACK BOX AND EMPTY 1" CONDUIT STUBBED INTO ACCESSIBLE CEILING SPACE. MOUNT 18" AFF UNO.
	EXIT LIGHT TYPE X1 UNO; PROVIDE NUMBER OF FACES AND DIRECTION OF CHEVRONS SHOWN ON ELECTRICAL AND ARCHITECTURAL DRAWINGS AND AS REQUIRED FOR PATH OF EGRESS. CONNECT TO UNSWITCHED LEG OF LOCAL LIGHT CIRCUIT.		WALL/SURFACE MOUNTED SPEAKER FOR PA SYSTEM
		S	CEILING MOUNTED SPEAKER FOR PA SYSTEM
		C	SYNCHRONOUS CLOCK FOR CENTRAL CLOCK SYSTEM
	LIGHT FIXTURE, TYPE AS NOTED	KP	KEY PAD FOR INTRUSION DETECTION SYSTEM
	LIGHT FIXTURE – BATTERY EMERGENCY LIGHTING UNIT, TYPE EB	A	AUDIO TYPE INTRUSION DETECTION SYSTEM DEVICE
		DS	DOOR SWITCH/CONTACT FOR INTRUSION DETECTION SYSTEM
$S_S S_3 S_4 S_a$ S_K	SINGLE POLE, THREE WAY SWITCH AND FOUR WAY SWITCH, 20A RATED MOUNT 44" AFF; LOWER CASE LETTER INDICATES SWITCHING GROUP; LETTER "K" INDICATES KEY OPERATED SWITCH	K	DATA JACK OUTLET – PROVIDE BACK BOX AND EMPTY 1" CONDUIT STUBBED INTO ACCESSIBLE CEILING SPACE. MOUNT 18" AFF UNO. "W" INDICATES WALL OUTLET MOUNTED 44" AFF.
S_D	WALL SWITCH – DIMMER		QUADRUPLEX CONVENIENCE OUTLET AND DATA OUTLETS IN FLOOR, WIREMOLD MODEL RFB4-CI UNO. COORDINATE COVER WITH FLOOR FINISH. PROVIDE TWO TVSS TYPE DUPLEX RECEPTACLES. PROVIDE 1-1/4" CONDUIT FROM EACH DATA COMPARTMENT AND STUBBED INTO ACCESSIBLE CEILING SPACE.
OS S_{OS}	WALL SWITCH WITH INTEGRAL MOTION/OCCUPANCY SENSOR	K	
OS	LIGHTING CONTROL OCCUPANCY SENSOR – CEILING MOUNTED		
OS1	LIGHTING CONTROL OCCUPANCY SENSOR – WALL MOUNTED		CABLE TRAY ABOVE DROPPED CEILING, SEE GENERAL SHEET NOTES.
OS2	LIGHTING CONTROL OCCUPANCY SENSOR – EXTENDED RANGE – CEILING MOUNTED (CORRIDORS & ROOMS OVER 400SQFT)		ELECTRIC POWER PANEL
		J	JUNCTION BOX
DL	LIGHTING CONTROL DAYLIGHT SENSOR – CEILING MOUNTED	T	TRANSFORMER
ER	EMERGENCY LIGHTING RELAY, SEE DETAIL		CIRCUIT BREAKER
			HOME RUN – 2#12+1#12G IN 3/4"C UNO.
			BRANCH CIRCUIT RUN CONCEALED IN CEILING AND WALLS – 2#12+1#12G IN 3/4"C UNO.
		E	EMERGENCY SYSTEM BRANCH CIRCUIT RUN CONCEALED IN CEILING AND WALLS –2#12+1#12G IN 3/4"C U.N.O.
T	DUPLEX CONVENIENCE OUTLET, MOUNTED 18" AFF U.N.O. "T" INDICATES TAMPER RESISTANT RECEPTACLE	P	SURFACE MOUNTED PVC RECEPTACLE RACEWAY WITH SIMPLEX RECEPTACLES SPACED AT 12" INTERVALS, 20A RATED 12AWG WIRE.
	GFI TYPE DUPLEX OR QUADRAPLEX CONVENIENCE OUTLET, MOUNT 18" AFF U.N.O		SURFACE MOUNTED WIREWAY, MULTIOUTLET ASSEMBLY, WITH DUAL COMPARTMENTS – COMMUNICATION & POWER; COORDINATE MOUNTING HEIGHT WITH ARCHITECTURAL DETAILS. CONCEAL POWER WIRING AND PROVIDE 1" CONDUIT CONCEALED IN WALL AND STUBBED INTO ACCESSIBLE CEILING SPACE FROM COMMUNICATION COMPARTMENT. PROVIDE GFCI TYPE RECEPTACLES WHEN RECEPTACLE IS WITHIN 10FT OF SINK. DO NOT INSTALL RECEPTACLES BEHIND OR WITHIN 6" OF SINK, PROVIDE DUPLEX RECEPTACLES ON 18" CENTERS UNO.
T	QUADRAPLEX CONVENIENCE OUTLET MOUNT 18" AFF U.N.O. "T" INDICATES TAMPER RESISTANT RECEPTACLE	W	
	SPECIAL RECEPTACLE, TYPE AS NOTED		
	DISCONNECT SWITCH, NUMBERS INDICATE AMPERAGE/# OF POLES; 30A/3P UNO		
	COMBINATION MAGNETIC STARTER		
E	EMERGENCY POWER OFF BUTTON, SEE CODETAIL		THIN LINED DASHED SYMBOL INDICATES EXISTING TO REMAIN UNO.
			SEE ELECTRICAL COMMON NOTES ON DRAWING E001
		#	SEE SHEET NOTE #

EEA CONSULTING ENGINEERS
4343 Pan American Freeway NE, Suite 239
Albuquerque, NM 87107
Main: 505.877.4499 - www.eeace.com
Project #: 2019MEP-25

SIMMS TOWER STUDIO 850
400 GOLD AVENUE SW
ALBUQUERQUE, NEW MEXICO
87102
TEL 505.243.8100

G. DONALD DUDLEY AIA
ARCHITECT
ARCHITECTURE • INTERIORS • PLANNING
AIA • NCARB • LEED AP

MICHAEL GRIESEL
NEW MEXICO
20486
PROFESSIONAL ENGINEER
04/13/2020

NEW BUILDING FOR:
RIO RANCHO SENIOR CENTER
CITY OF RIO RANCHO
NEW MEXICO

MARK	DATE	DESCRIPTION

GDDA PROJECT NO: 18-137
DATE: 04/13/2020
DRAWN BY: CA
CHECKED BY: MG
SET NO:
SHEET TITLE: ELECTRICAL LEGENDS & SPECS

E001

PULL BOX SCHEDULE	
TYPE	SIZE
A	13Wx13Lx18D
B	17Wx30Lx24D

G1 HAND HOLE DETAIL

NTS

NOTE: ALL PULL BOXES ARE TYPE "A" UNLESS NOTED OTHERWISE

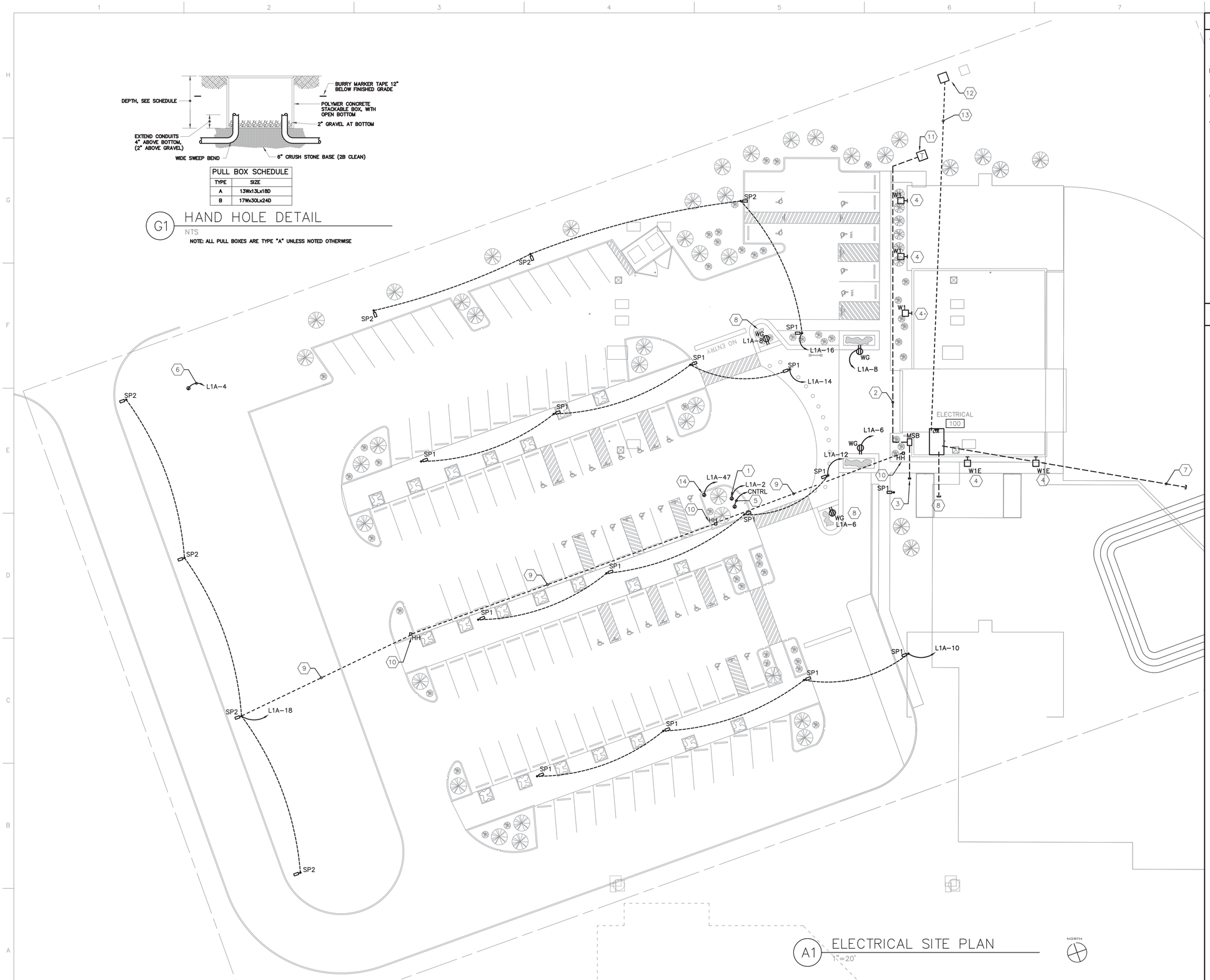

A1 ELECTRICAL SITE PLAN

1"=20'

NORTH

GENERAL SHEET NOTES

A. SEE ARCHITECTURAL, LANDSCAPING, AND CIVIL DOCUMENTS, DRAWINGS, AND DETAILS FOR RELATED WORK. COORDINATE ELECTRICAL WORK WITH ALL TRADES AND UTILITY PROVIDERS.
B. SP1C SITE LIGHTING POLE WORK TO INCLUDE POLE, FIXTURE/HEAD, AND WIRING. SEE POLE INSTALLATION DETAILS. SP1C TO ALSO INCLUDE A CONCRETE BASE.
C. ALL EXTERIOR LIGHTS (POLE LIGHTS + WALL LIGHTS) AND INTERIOR COMMON SPACE AND CORRIDOR LIGHTS ARE CONTROLLED BY CENTRAL LIGHTING CONTROL PANEL.
J. BRANCH CIRCUITS TO BE 2#10 + 1#12 GND IN 3/4" CONDUIT UON.

KEYNOTES

1. HOT BOX. POWER CONNECTION TO DOMESTIC WATER + FIRE PROTECTION WATER SERVICE HOTBOX HEATER. STUB-UP UNDERGROUND AND PROVIDE WEATHERPROOF GFCI TYPE RECEPTACLE INSIDE WATER SERVICE BACKFLOW PREVENTER SERVICE HOT BOX. DIRECT BURRY 1°C WITH 2#10+1#10G COORDINATE WITH CIVIL AND PLUMBING CONTRACTORS.
2. REFER TO E-601 SHEET FOR UNDERGROUND FEEDER SIZE.
3. STUB UNDERGROUND SPARE CONDUIT 15FT SOUTH UNDER CONCRETE WALKWAY FOR FUTURE BUILDING. REFER TO E-601 FOR CONDUIT QUANTITY.
4. TYPE W1/W1E WALL FIXTURE SHOWN FOR REFERENCE. REFER TO EL111.
5. 1 INCH UNDERGROUND CONDUIT TO ELECTRICAL ROOM FOR HOT BOX DATA.
6. FUTURE MONUMENT SIGN. ROUTE SPARE 3/4" UNDERGROUND CONDUIT TO ELECTRICAL ROOM. CAP, MARK AND PROVIDE PULL STRING. COORDINATE FINAL LOCATION WITH ARCHITECT PRIOR TO INSTALL.
7. FUTURE MARQUE SIGN. EXTEND (1) 3/4" FOR POWER AND (1) 1" CONDUIT FOR DATA. COORDINATE FINAL DISTANCE AND LOCATION WITH ARCHITECT PRIOR TO INSTALL.
8. STUB (1) 2" CONDUIT AND (1) 1" CONDUIT UNDERGROUND FOR FUTURE STORAGE BUILDING. CAP, MARK AND PROVIDE PULL STRING. COORDINATE FINAL LOCATION WITH ARCHITECT PRIOR TO INSTALL.
9. 3/4" UNDEGROUND CONDUIT.
10. HAND HOLE. REFER TO G1/ES101 HAND HOLE DETAIL.
11. PNM PAD MOUNTED TRANSFORMER. PROVIDE PAD AND ROUGH-IN PER PNM STANDARDS AND REQUIREMENTS. COORDINATE FINAL LOCATION OF TRANSFORMER WITH PNM PRIOR TO ROUGH-IN.
12. 3FT X 4 FT IN-GRADE BOX. COORDINATE FINAL LOCATION WITH TELECOMMUNICATIONS COMPANY PRIOR TO INSTALL.
13. PROVIDE (2) 4" + (1) 2" UNDERGROUND CONDUIT. COORDINATE FINAL ROUTING AND LOCATION WITH TELECOMMUNICATIONS COMPANY.
14. POWER CONNECTION TO IRRIGATION WATER SERVICE HOTBOX HEATER AND IRRIGATION CONTROLLER. STUB-UP UNDERGROUND AND PROVIDE A WEATHERPROOF GFCI TYPE RECEPTACLE INSIDE WATER SERVICE BACKFLOW PREVENTER SERVICE HOT BOX. DIRECT BURRY 1°C WITH 2#10+1#10G COORDINATE WITH CIVIL AND PLUMBING CONTRACTORS

EEA CONSULTING ENGINEERS
4343 Pan American Freeway NE, Suite 239
Albuquerque, NM 87107
Main: 505.877.4499 - www.eeace.com
Project #: 2019MEP-25

G. DONALD DUDLEY AIA
ARCHITECT
ARCHITECTURE • INTERIORS • PLANNING
AIA • NCARB • LEED AP
SIMMS TOWER STUDIO 850
400 GOLD AVENUE SW
ALBUQUERQUE, NEW MEXICO
87102
TEL 505.243.8100

MICHAEL GRIESEL
NEW MEXICO
20486
PROFESSIONAL ENGINEER
04/13/2020

NEW BUILDING FOR:

RIO RANCHO
SENIOR CENTER

CITY OF RIO RANCHO
NEW MEXICO

MARK	DATE	DESCRIPTION

GDDA PROJECT NO: 18-137

DATE: 04/13/2020

DRAWN BY: CA

CHECKED BY: MG

SET NO:

SHEET TITLE: ELECTRICAL SITE PLAN

ES101

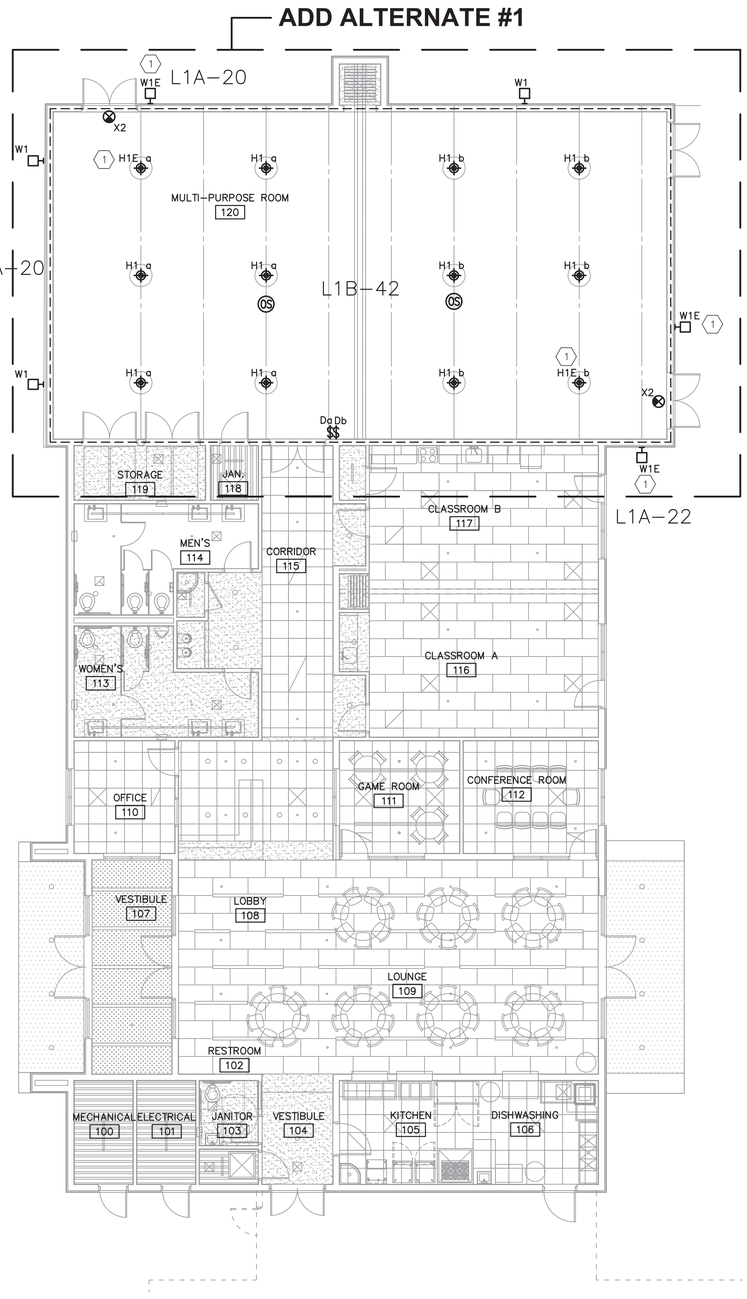

A1 ELECTRICAL LIGHTING PLAN – ADD ALTERNATE #1
1/8"=1'-0"

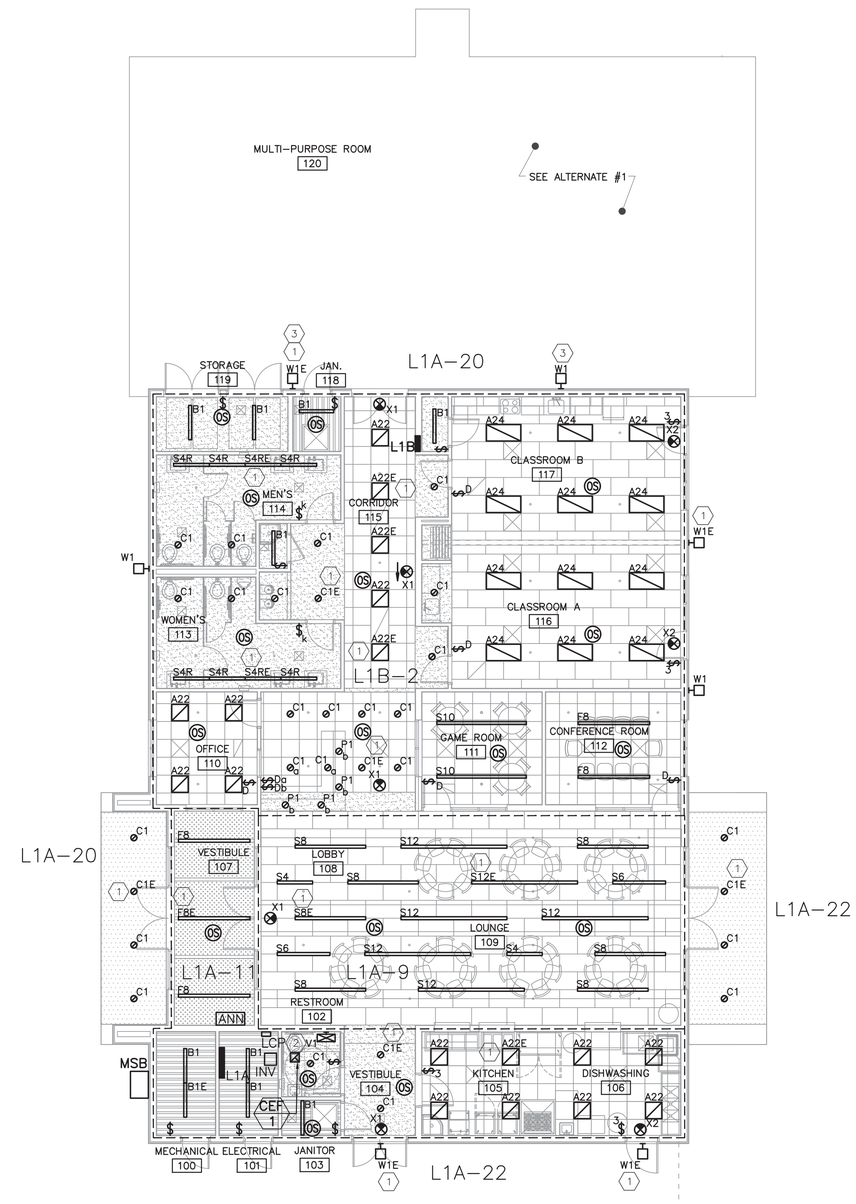

A5 ELECTRICAL LIGHTING PLAN – BASE BID
1/8"=1'-0"

GENERAL SHEET NOTES

A. SEE PROJECT GENERAL ELECTRICAL NOTES ON E001.
B. COORDINATE FINAL LOCATION AND CEILING TYPES WITH ARCHITECTURAL CEILING PLANS.
C. ALL EXTERIOR LIGHTS (POLE LIGHTS + WALL LIGHTS), INTERIOR COMMON SPACES AND CORRIDOR LIGHTS ARE CONTROLLED BY CENTRAL LIGHTING CONTROL PANEL.
D. PROVIDE SEISMIC SUPPORTS AT ADJACENT CORNERS OF EACH LIGHT FIXTURE IN ALL T-GRIDS.
E. EGRESS LIGHT FIXTURES TO BE POWERED FROM INVERTER AND TO REQUIRE A UL924 DEVICE. REFER TO RELATED KEYED NOTES ON THIS PLAN FOR ADDITIONAL INFORMATION.
J. BRANCH CIRCUITS TO BE 2#12 + 1#12 GND IN 3/4" CONDUIT UON.
K. CONNECT ALL LUMINAIRES WITHIN DASHED BOUNDARY TO CIRCUIT INDICATED.

KEYNOTES

1. PROVIDE UL924 DEVICE. OVERRIDE LOCAL CONTROL SCHEME TO GO TO FULL BRIGHT UPON POWER FAILURE. PROVIDE EMERGENCY POWER FROM INV IN ELECTRICAL ROOM 101. PROVIDE NORMAL POWER PER PLAN.
2. CEF-1. POWER EXHAUST FAN FROM LIGHTING CIRCUIT. PROVIDE RELAY AND CONTROL EXHAUST FROM LOCAL OCCUPANCY SENSOR.
3. BASE BID EXTERIOR WALL LIGHT. DO NOT PROVIDE FOR ALTERNATE #1.

SIMMS TOWER STUDIO 850
400 GOLD AVENUE SW
ALBUQUERQUE, NEW MEXICO
87102
TEL 505.243.8100

G. DONALD DUDLEY AIA
ARCHITECT
ARCHITECTURE • INTERIORS • PLANNING
AIA • NCARB • LEED AP

MICHAEL GRIESEL
NEW MEXICO
20486
PROFESSIONAL ENGINEER
04/13/2020

NEW BUILDING FOR:
RIO RANCHO
SENIOR CENTER
CITY OF RIO RANCHO
NEW MEXICO

MARK	DATE	DESCRIPTION

GDDA PROJECT NO: 18-137
DATE: 04/13/2020
DRAWN BY: CA
CHECKED BY: MG
SET NO:
SHEET TITLE: ELECTRICAL LIGHTING

EEA CONSULTING ENGINEERS
4343 Pan American Freeway NE, Suite 239
Albuquerque, NM 87107
Main: 505.877.4499 - www.eeace.com
Project #: 2019MEP-25

EL111

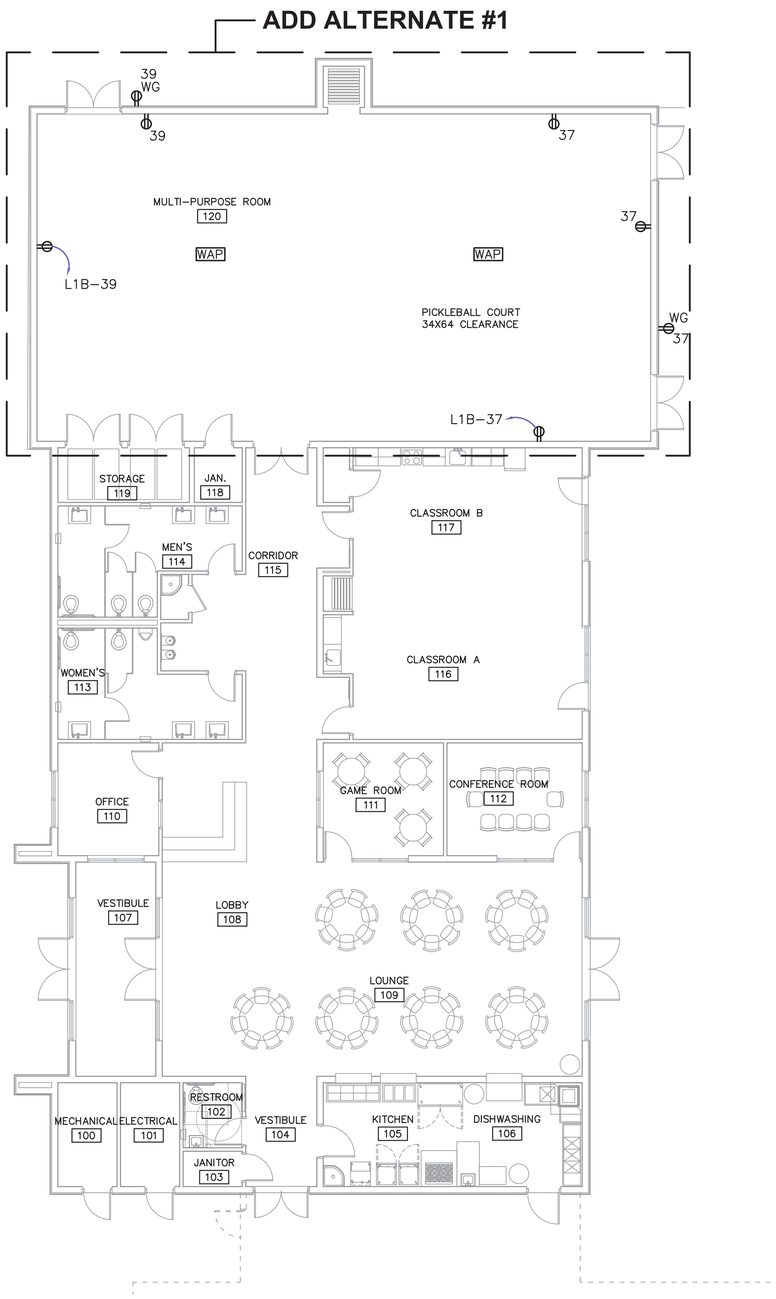

A1 ELECTRICAL LIGHTING PLAN – ADD ALTERNATE #1

1/8"=1'-0"

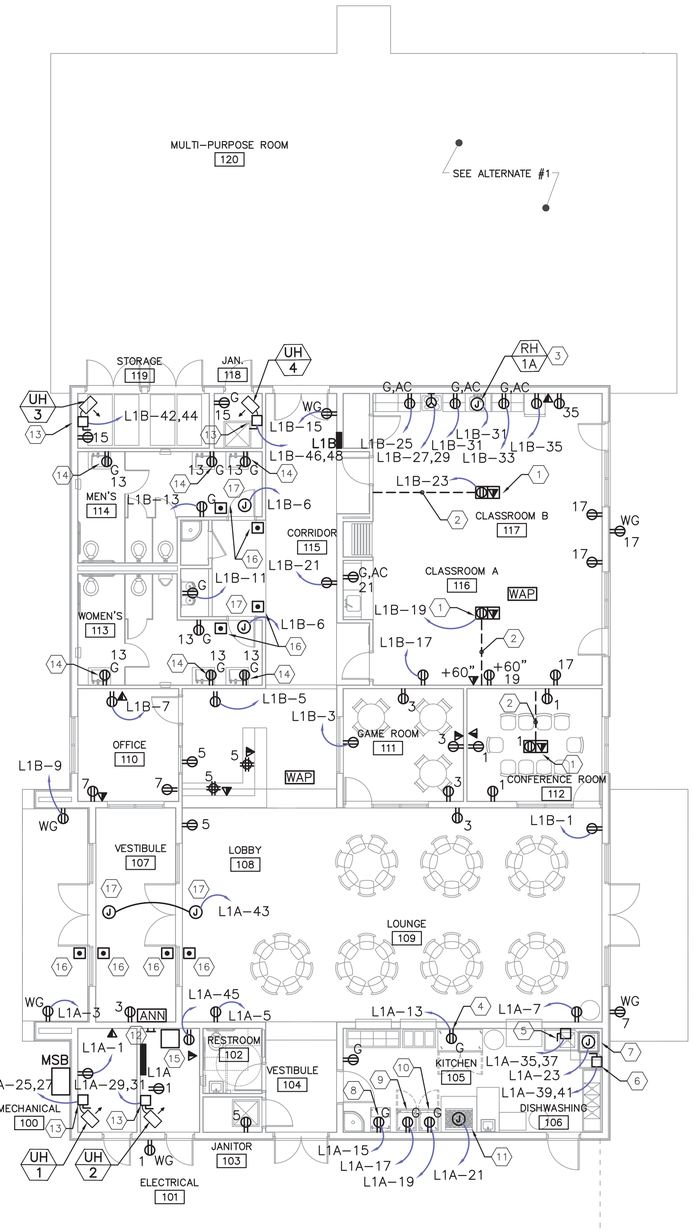

A5 ELECTRICAL POWER PLAN – BASE BID

1/8"=1'-0"

GENERAL SHEET NOTES

A. SEE PROJECT GENERAL ELECTRICAL NOTES ON E001
B. COORDINATE FINAL LOCATION OF ALL DEVICES WITH OWNER AND ARCHITECT WITH RESPECT TO MOUNTING HEIGHTS AND LOCATION OF EQUIPMENT, FURNITURE AND WALL FURNISHINGS. COORDINATE FINAL LOCATION SO AS NOT TO INTERFERE WITH FURNISHING OR WALL MOUNTED ITEMS.
C. ALL ELECTRICAL WIRING DEVICES ARE TO BE RECESSED (FLUSH MOUNTED) UNLESS NOTED OTHERWISE OR OTHERWISE DIRECTED BY OWNER.
D. COORDINATE LOCATION OF ALL MECHANICAL, PLUMBING AND FIRE PROTECTION EQUIPMENT WITH THEIR TRADE DRAWINGS AND INSTALLING CONTRACTOR.
E. COORDINATE ALL WIRING, CONNECTION AND CONTROLS FOR MECHANICAL EQUIPMENT WITH MECHANICAL AND ATC CONTRACTORS. COORDINATE LOCATION AND INSTALLATION OF CONTROL DEVICES.
F. PREPARE ROUGH-IN COORDINATION DRAWING AND COORDINATE ALL POWER REQUIREMENTS AND FINAL LOCATION OF ALL CONDUIT, RACEWAY AND BOX ROUGH-INS WITH ALL CONTRACTORS AND THE OWNER'S REPRESENTATIVE.
G. COORDINATE ALL ROOF PENETRATIONS WITH MECHANICAL, PLUMBING AND ARCHITECTURAL DETAILS.
H. AVOID BACK-TO-BACK ELECTRICAL BOXES (RECEPTACLES, TELECOM OUTLETS, SWITCHES) BETWEEN CLASSROOMS. IF BOXES OCCUR IN THE SAME STUD-SPACE CAVITY, PROVIDE SOUND PUTTY PAD OVER BOXES SERVING ONE ROOM.
I. PROVIDE ROUGH-IN AND CONDUIT PATHS FOR ALL DATA AND COMMUNICATIONS SYSTEMS.
J. BRANCH CIRCUITS TO BE 2#12 + 1#12 GND IN 3/4" CONDUIT UON.

KEYNOTES

1. COMBINATION DATA AND RECEPTACLE RECESSED FLOOR BOX. BASIS OF DESIGN: LEGRAND RFB2 TWO-COMPARTMENT RECESSED FLOOR BOX. 3/4" CONDUIT KNOCKOUT WITH MOUNTING PLATE FOR RECEPTACLE AND 1" CONDUIT KNOCKOUT WITH MOUNTING PLATE FOR DATA.
2. PROVIDE 3/4" UNDERGROUND CONDUIT FOR RECEPTACLE AND 1" CONDUIT FOR DATA AND ROUTE UP INTO NEAREST ACCESSIBLE CEILING SPACE.
3. BID ALTERNATE RANGE HOOD. POWER REMOTE EXHAUST FAN IN CEILING SPACE.
4. FREEZER.
5. WASTE DISPOSER.
6. DISH MACHINE. PROVIDE 100A/2P DISCONNECT AND 2#2 + 1#8 IN 1-1/4"C. CONFIRM FINAL POWER REQUIREMENTS WITH KITCHEN CONSULTANT PRIOR TO INSTALL.
7. DISHWASHER EXHAUST HOOD AND FAN.
8. ICE MAKER.
9. REACH-IN REFRIGERATOR.
10. REACH-IN HEATED CABINET.
11. GAS RANGE EXHAUST HOOD AND FAN.
12. MAIN GROUND BAR.
13. POWER TO UH, 208V 1-PHASE. PROVIDE LOCAL 30A/3P; NEMA 1 DISCONNECT. COORDINATE FINAL LOCATION WITH OTHER TRADES AND PROVIDE NEC REQUIRED CLEARANCE.
14. PROVIDE RECEPTACLE TIGHT, UP UNDER SINK FOR FAUCET SENSOR POWER SUPPLY. COORDINATE WITH PLUMBING CONTRACTOR.
15. WALL MOUNTED DATA RACK. SEE SPECIFICATIONS. PROVIDE 3/4" FIRE RATED PLYWOOD ON WALL. ROUTE ALL DATA WIRING TO THIS LOCATION. INSTALL POWER RECEPTACLE ADJACENT TO RACK.
16. PUSH BUTTON FOR MOTORIZED DOOR OPENER, MOUNTED ON WALL\MULLION. SEE ARCHITECTURAL DRAWINGS MOUNTING DIMENSIONS. PROVIDE 1"C FROM BACKBOX UP INTO CEILING CAVITY. COORDINATE WITH ARCHITECT AND DOOR INSTALLER.
17. POWER CONNECTION FOR MOTORIZED DOOR OPENERS. PROVIDE CONTROL WIRING AND CONDUITS, SEE ET DRAWINGS FOR ADDITIONAL WORK. COORDINATE FINAL REQUIREMENTS WITH DOOR INSTALLER.

EEA CONSULTING ENGINEERS
4343 Pan American Freeway NE, Suite 239
Albuquerque, NM 87107
Main: 505.877.4499 - www.eeace.com
Project #: 2019MEP-25

SIMMS TOWER STUDIO 850
400 GOLD AVENUE SW
ALBUQUERQUE, NEW MEXICO
87102
TEL 505.243.8100

G. DONALD DUDLEY AIA
ARCHITECT
ARCHITECTURE • INTERIORS • PLANNING
AIA • NCARB • LEED AP

MICHAEL GRIESEL
NEW MEXICO
20486
PROFESSIONAL ENGINEER
04/13/2020

NEW BUILDING FOR:
RIO RANCHO
SENIOR CENTER
CITY OF RIO RANCHO
NEW MEXICO

MARK	DATE	DESCRIPTION

GDDA PROJECT NO: 18-137
DATE: 04/13/2020
DRAWN BY: CA
CHECKED BY: MG
SET NO:
SHEET TITLE: ELECTRICAL POWER

EP101

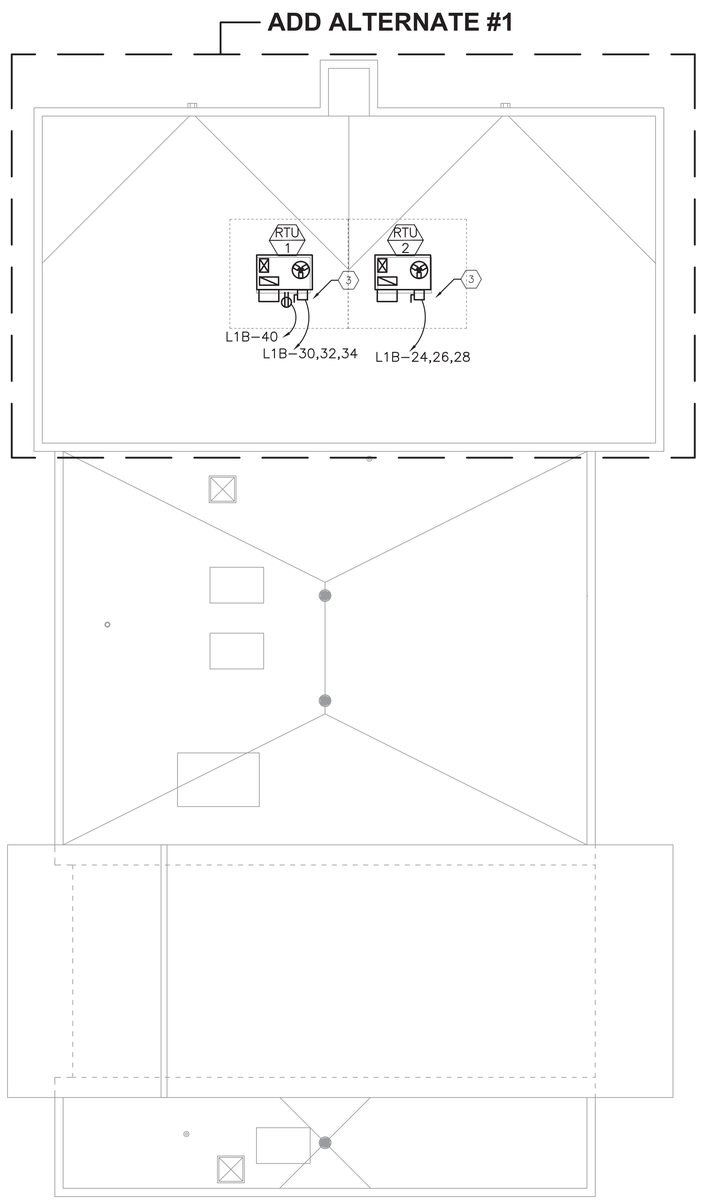

A1 ELECTRICAL ROOF PLAN – ADD ALTERNATE #1
1/8"=1'–0"

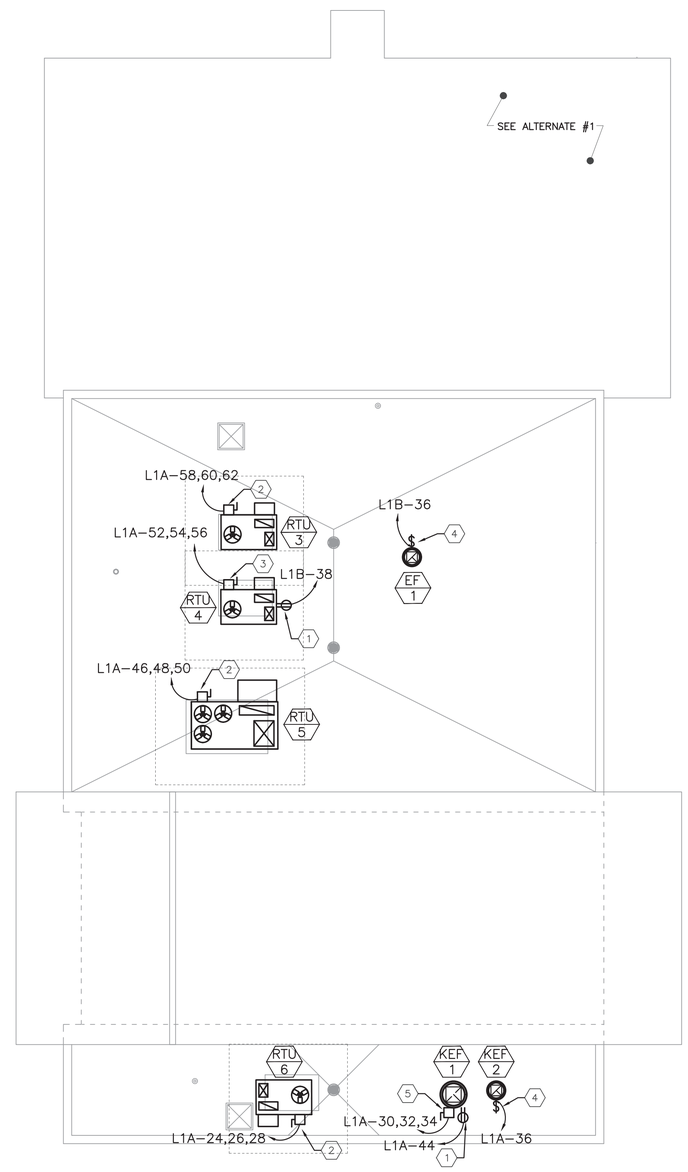

A5 ELECTRICAL ROOF PLAN – BASE BID
1/8"=1'–0"

GENERAL SHEET NOTES

A. SEE PROJECT GENERAL ELECTRICAL NOTES ON E001.
B. COORDINATE ALL ROOF PENETRATIONS WITH MECHANICAL, PLUMBING AND ARCHITECTURAL DETAILS.
C. COORDINATE LOCATION OF ALL MECHANICAL. PLUMBING AND FIRE PROTECTION EQUIPMENT WITH THEIR TRADE DRAWINGS AND INSTALLATION CONTRACTOR.
D. COORDINATE ALL WIRING, CONNECTION AND CONTROLS FOR MECHANICAL EQUIPMENT WITH MECHANICAL CONTRACTORS. COORDINATE LOCATION AND INSTALLATION OF CONTROL DEVICES.

KEYNOTES

1. PROVIDE WEATHERPROOF, GFCI TYPE POWER RECEPTACLE. PROVIDE INDEPENDENT SUPPORT FROM UNIT. COORDINATE LOCATION WITH EQUIPMENT INSTALLED. CONSOLIDATE ROOF PENETRATIONS WHERE POSSIBLE AND ROUTE WITH OTHER PENETRATIONS.
2. POWER TO RTU, 208V 3–PHASE. PROVIDE LOCAL 60A/3P; NEMA 3R DISCONNECT; PROVIDE INDEPENDENT SUPPORT FROM ROOF FOR DISCONNECT. AVOID ANY DIRECT HARD CONNECTION TO VIBRATING UNIT.; PROVIDE LFMC CONDUIT CONNECTION TO UNIT. 3#6+1#10G IN 1"C UNO. COORDINATE LOCATION WITH OTHER TRADES.
3. POWER TO RTU, 208V 3–PHASE. PROVIDE LOCAL 30A/3P; NEMA 3R DISCONNECT; PROVIDE INDEPENDENT SUPPORT FROM ROOF FOR DISCONNECT. AVOID ANY DIRECT HARD CONNECTION TO VIBRATING UNIT.; PROVIDE LFMC CONDUIT CONNECTION TO UNIT. 3#10+1#10G IN 3/4"C. COORDINATE LOCATION WITH OTHER TRADES.
4. POWER TO EF/KEF; 120V 1–PHASE. PROVIDE LOCAL; NEMA 3R DISCONNECT. PROVIDE INDEPENDENT SUPPORT FROM FLOOR FOR DISCONNECT. AVOID ANY DIRECT HARD CONNECTION TO VIBRATING UNIT; PROVIDE LFMC CONDUIT CONNECTION TO UNIT. 2#12+1#12G IN 3/4"C. COORDINATE LOCATION WITH OTHER TRADES.
5. POWER TO KEF, 208V 3–PHASE. PROVIDE LOCAL 30A/3P; NEMA 3R DISCONNECT; PROVIDE INDEPENDENT SUPPORT FROM ROOF FOR DISCONNECT. AVOID ANY DIRECT HARD CONNECTION TO VIBRATING UNIT.; PROVIDE LFMC CONDUIT CONNECTION TO UNIT. COORDINATE LOCATION WITH OTHER TRADES.

EEA CONSULTING ENGINEERS
4343 Pan American Freeway NE, Suite 239
Albuquerque, NM 87107
Main: 505.877.4499 - www.eeace.com
Project #: 2019MEP-25

G. DONALD DUDLEY AIA
ARCHITECT
ARCHITECTURE • INTERIORS • PLANNING
AIA • NCARB • LEED AP
SIMMS TOWER STUDIO 850
400 GOLD AVENUE SW
ALBUQUERQUE, NEW MEXICO
87102
TEL 505.243.8100

MICHAEL GRIESEL
NEW MEXICO
20486
PROFESSIONAL ENGINEER
04/13/2020

NEW BUILDING FOR:
RIO RANCHO SENIOR CENTER
CITY OF RIO RANCHO NEW MEXICO

MARK	DATE	DESCRIPTION

GDDA PROJECT NO: 18–137
DATE: 04/13/2020
DRAWN BY: CA
CHECKED BY: MG
SET NO:
SHEET TITLE: ELECTRICAL ROOF PLAN

E102

FEEDER SCHEDULE

AMPERAGE	CONDUCTOR and RACEWAY QUANTITY\SIZE (Listed as 3-phase 4-wire) (reduce current carrying conductor quantity by one if using a 3-phase 3-wire application)	
	Copper Conductors	Aluminum Conductors
20A	4#12 + 1#12G, 3/4"C	Not Allowed
30A	4#10 + 1#10G, 3/4"C	Not Allowed
40A	4#8 + 1#10G, 3/4"C	Not Allowed
50A	4#6 + 1#10G, 1"C	Not Allowed
60A	4#4 + 1#10G, 1"C	Not Allowed
70A	4#4 + 1#8G, 1.25"C	Not Allowed
80A	4#3 + 1#8G, 1.25"C	Not Allowed
90A	4#2 + 1#8G, 1.25"C	Not Allowed
100A	4#1 + 1#8G, 1.5C	Not Allowed
125A	4#1 + 1#6G, 1.5"C	4#1/0 + 1#6G-CU, 2"C
150A	4#1/0 + 1#6G, 2"C	4#3/0 + 1#6G-CU, 2"C
175A	4#2/0 + 1#4G, 2"C	4#4/0 + 1#6G-CU, 2.5"C
200A	4#3/0 + 1#6G, 2"C	4#250KCMIL + 1#6G-CU, 2.5"C
225A	4#4/0 + 1#4G, 2.5"C	4#300KCMIL + 1#4G-CU, 2.5"C
250A	4#250KCMIL + 1#4G, 2.5"C	4#350KCMIL + 1#4G-CU, 3"C
300A	4#350KCMIL + 1#4G, 3"C	4#500KCMIL + 1#4G-CU, 3"C or (2 SETS)(4#3/0+1#4G-CU, 2"C)
350A	4#500KCMIL + 1#3G, 3"C	(2 SETS)(4#4/0KCMIL + 1#3G-CU, 2.5"C)
400A	4#600KCMIL + 1#3G, 4"C or (2 SETS)(4#3/0+1#3G, 2"C)	(2 SETS)(4#250KCMIL + 1#3G-CU, 2.5"C)
500A	(2 SETS)(4#250KCMIL + 1#2G, 2-1/2"C)	(2 SETS)(4#350KCMIL + 1#2G-CU, 3"C)
600A	(2 SETS)(4#350KCMIL + 1#1G, 3"C)	(2 SETS)(4#500KCMIL + 1#1G-CU, 3"C)
700A	(2 SETS)(4#500KCMIL + 1#1/0G, 3"C)	(3 SETS)(4#350KCMIL + 1#1G-CU, 3"C)
800A	(2 SETS)(4#600KCMIL + 1#1/0G, 4"C) or (3 SETS)(4#300KCMIL + 1#1/0G, 3"C)	(3 SETS)(4#400KCMIL + 1#1/0G-CU, 3"C)
1000A	(3 SETS)(4#400KCMIL + 1#2/0G, 3"C)	(3 SETS)(4#600KCMIL + 1#2/0G-CU, 4"C)
1200A	(3 SETS)(4#600KCMIL + 1#3/0G, 4"C) or (4 SETS)(4#350KCMIL + 1#3/0G, 3"C)	(4 SETS)(4#500KCMIL + 1#3/0G-CU, 3"C)
1600A	(4 SETS)(4#600KCMIL + 1#4/0G, 4"C) or (5 SETS)(4#400KCMIL + 1#4/0G, 3"C)	(5 SETS)(4#600KCMIL + 1#4/0G-CU, 4"C)
2000A	(5 SETS)(4#600KCMIL + 1#250KCMIL-G, 4"C) or (6 SETS)(4#400KCMIL + 1#250KCMIL-G, 3"C)	(6 SETS)(4#600KCMIL + 1#250KCMIL-G-CU, 4"C)
2500A	(6 SETS)(4#600KCMIL + 1#350KCMIL-G, 4"C)	(8 SETS)(4#600KCMIL + 1#350KCMIL-G-CU, 4"C)
3000A	(8 SETS)(4#500KCMIL + 1#400KCMIL-G, 3"C)	(10 SETS)(4#500KCMIL + 1#400KCMIL-G-CU, 3"C) or (9 SETS)(4#600KCMIL + 1 #400KCMIL-G-CU, 4"C)

Notes:
1. Conductors sized w/ 60°C Rating and 75°C per NEC Table 310.15(B)(16) + NEC 110.14
2. Grounding Conductors Sized per NEC Table 250.122
3. Neutral Conductor(s) are Non Current-Carrying per NEC 310.15(B)(5)(a). Derate per NEC Table 310.15(B)(3)(a) as required.
4. All ground conductors are to use copper conductors.

Fault Current Summary — Last Updated: 1/27/2020

Fault Location	Equipment	Source Equip. (Sec. of Utility XFMR)	Current at Source Eqip.	(V) Voltage	Phase	XFMR SIZE (KVA)	XFMR SEC. Voltage	XFMR % Impedance	(L) Dist. From source	(C) Wire Size KCMIL/AWG	(N) Conductors/Phase	CU or AL Conductor	Conduit Material	(I) Current Available at Fault
F1	MDP		60000	208	3				125	600	4	CU	NONMAG	36516
F2	L1A	MDP	36516	208	3				10	350	2	CU	NONMAG	34227
F3	L1B	L1A	34227	208	3				60	4/0	1	CU	NONMAG	16897

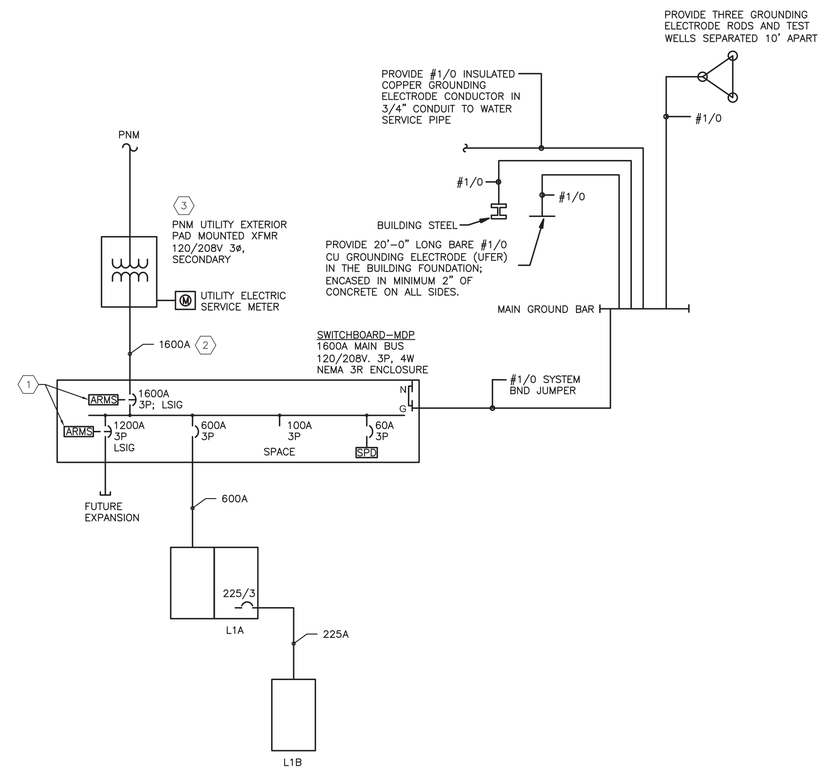

A4 ELECTRICAL ONE-LINE DIAGRAM
NTS

GENERAL SHEET NOTES

A. SEE SPECIFICATIONS FOR ELECTRICAL SYSTEM STUDY AND ARC FLASH ANALYSIS REQUIREMENTS.
B. INFORMATION SHOWN IS DIAGRAMMATIC, AND IS NOT INTENDED TO REPRESENT PHYSICAL ARRANGEMENTS OR LOCATIONS. ROUTING, CONNECTIONS AND PHYSICAL LAYOUTS ARE TO BE PER FIELD CONDITIONS AND AS INDICATED ELSEWHERE IN THE ELECTRICAL PLANS.
C. NEW UTILITY OWNED PAD MOUNTED TRANSFORMER. PROVIDE PAD PER PNM REQUIREMENTS. COORDINATE LOCATION AND INSTALLATION WITH PNM AND ALL SITE WORK. SEE SITE DRAWING.
D. BOND EQUIPMENT WITH EQUIPMENT BONDING JUMPER AND SIZE PER NEC.
E. SEE CALCULATED FAULT CURRENT TABLE. THE CALCULATED AVAILABLE SHORT CIRCUIT CURRENT AT FAULT POINT IS TO BE TREATED AS A MINIMUM VALUE, SELECT AND PROVIDE ALL EQUIPMENT TO EXCEED THE RESULT VALUES LISTED IN THE TABLE. TABLE VALUES ARE BASED ON EXPECTED LENGTHS, CONDUCTOR MATERIAL, CONDUCTOR SIZE, IMPEDANCE, CONDUIT MATERIAL, ETC. CONTRACTOR AND VENDOR TO PROVIDE FINAL ARC FLASH STUDY PER SPECIFICATION 260573. COORDINATE FINAL EQUIPMENT SELECTION AND RATING WITH CONTRACTOR PROVIDED STUDY.

KEYNOTES

1. ENERGY REDUCING MAINTENANCE SWITCH WITH LOCAL STATUS INDICATOR PER NEC 240.87.
2. DO NOT INSTALL EGC.
3. PROVIDE TRANSFORMER PAD PER PNM STANDARDS.

G. DONALD DUDLEY AIA
ARCHITECT
ARCHITECTURE - INTERIORS - PLANNING
AIA - NCARB - LEED AP
SIMMS TOWER STUDIO 850
400 GOLD AVENUE SW
ALBUQUERQUE, NEW MEXICO
87102
TEL 505.243.8100

MICHAEL GRIESEL
NEW MEXICO
20486
PROFESSIONAL ENGINEER
04/13/2020

NEW BUILDING FOR:
RIO RANCHO SENIOR CENTER
CITY OF RIO RANCHO NEW MEXICO

MARK	DATE	DESCRIPTION

GDDA PROJECT NO: 18-137
DATE: 04/13/2020
DRAWN BY: CA
CHECKED BY: MG
SET NO:
SHEET TITLE: ELECTRICAL DIAGRAMS

EEA CONSULTING ENGINEERS
4343 Pan American Freeway NE, Suite 239
Albuquerque, NM 87107
Main: 505.877.4499 - www.eeace.com
Project #: 2019MEP-25

E601

LIGHTING CONTROL SCHEDULE AND DIAGRAMS

SYMBOL	DISCRIPTION OF APPLICATION	BLOCK DIAGRAM OF SYSTEM
1	CLASSROOM, OFFICE, CONFERENCE W/ WINDOW	120V — RC — OS A — $D
2	GAME ROOM NO WINDOW	120V — RC — OS B — $D
3	MANUAL CONTROL (EX. ELEC CLOSET, MECH RM, KITCHEN)	120V — $
4	GANGED TOILET	120V — OS D — $K
5	LOUNGE, VESTIBULE, (OS W/ TIME CLOCK OVERIDE)	120V — LCP — RC — OS C
6	CORRIDOR MULTI–PURPOSE RM (OS W/ TIME CLOCK OVERIDE)	120V — LCP — RC — OS B
7	STORAGE, JANITOR, RESTROOM, FOOD PREP	120V — $ — OS D
8	EXTERIOR (TIME CLOCK)	120V — LCP

LEGEND FOR LIGHTING CONTROL DIAGRAMS

- OS A — A: CEILING MOUNTED OCCUPANCY SENSOR, –DAYLIGHT SENSOR, –LV WIRING, –DUAL TECHNOLOGY ULTRASONIC + IR, –PROGRAM TO VACANCY MODE.
- OS B — B: CEILING MOUNTED OCCUPANCY SENSOR, –LV WIRING, –DUAL TECHNOLOGY ULTRASONIC + IR, –PROGRAM TO VACANCY MODE.
- OS C — C: CEILING MOUNTED OCCUPANCY SENSOR, –DAYLIGHT SENSOR, –LV WIRING, –DUAL TECHNOLOGY ULTRASONIC + IR, –PROGRAM TO OCCUPANCY MODE.
- OS D — D: CEILING MOUNTED OCCUPANCY SENSOR, –LINE VOLTAGE WIRING, –DUAL TECHNOLOGY ULTRASONIC + IR, –PROGRAM TO VACANCY MODE.
- $ — WALL SWITCH –LINE VOLTAGE
- $K — WALL SWITCH –LINE VOLTAGE –KEY OPERATED
- $D — WALL SWITCH –LOW VOLTAGE –DIMMING, ON\OFF, RAISE\LOWER + INDICATOR
- $M — MOMENTARY OVERRIDE SWITCH –LOW VOLTAGE
- GENERIC SYMBOL FOR LIGHT FIXTURE, SEE PLAN FOR QUANTITY
- LINE VOLTAGE WIRING
- LOW VOLTAGE WIRING
- RC — ROOM CONTROL PANEL (CONCEALED ABOVE CEILING)
- PUSH BUTTON. SEE FLOOR PLAN NOTES.
- LCP — PROGRAMMABLE LIGHTING CONTROL PANEL WITH SCREEN AND ASTRONOMICAL TIME CLOCK.
- PP — POWER PACK; 0–10V (CONCEALED ABOVE CEILING)

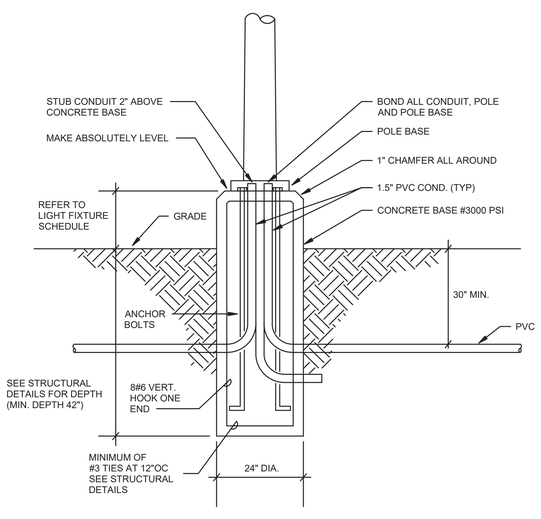

A1 LIGHT POLE BASE DETAIL
NTS

LIGHT FIXTURE SCHEDULE

TYPE	DESCRIPTION	MOUNT	LENS	ILLUMINATION	DIMMING	WATTAGE	VOLTAGE	LUM PER WATT (MINIMUM)	BASIS OF DESIGN
A22	LED FLAT PANEL, 2' X 2'. ALUMINUM BEZEL HELD TO CODE GAUGE STEEL BACK PLATE. WHITE FROST ACRYLIC DIFFUSER. LUMINAIRE LESS THAN 2" DEPTH. PROVIDE GASKETING BETWEEN FIXTURE AND CEILING.	LAYIN	ACRYLIC	3500K 4500LUM 80CRI	0-10V DIM TO 10%	38.3	120V	>110	METALUX MODEL #24FP
A24	LED FLAT PANEL, 2' X 4'. ALUMINUM BEZEL HELD TO CODE GAUGE STEEL BACK PLATE. WHITE FROST ACRYLIC DIFFUSER. LUMINAIRE LESS THAN 2" DEPTH. PROVIDE GASKETING BETWEEN FIXTURE AND CEILING.	LAYIN	ACRYLIC	3500K 4900LUM 80CRI	0-10V DIM TO 10%	40	120V	>120	METALUX MODEL #24FP
B1	4 FT LINEAR LED STRIP LIGHT. COLD ROLLED STEEL FIXTURE CHANNEL; COVER AND END PLATES. WIDE FROST ACRYLIC LENS. COORDINATE FINAL FINISH WITH ARCHITECT.	CHAIN/ SURFACE	ACRYLIC	3500K 6100LUM 80CRI	0-10V DIM TO 10%	46	120V	>130	METALUX MODEL #5RL
C1	4-INCH RECESSED ROUND DOWN LIGHT. SPECIFICATION GRADE. ALUMINUM SEMI-SPECULAR REFLECTOR. WIDE (75DEGREE) DISTRIBUTION. COORDINATE FINAL FINISH WITH ARCHITECT. WET LISTED.	RECESSED	OPEN LENS	3500K 1500LUM 80CRI	0-10V DIM TO 10%	14	120V	>100	HALO MODEL # FRAME #HC4XXD010 LED MODULE #HM4 REFLECTOR #41WDH
F8	LINEAR INDIRECT/DIRECT 8 FT LED STRIPLIGHT WITH 8 PERCENT UPLIGHT. 3 INCH DEEP HOUSING WITH BOTH ALUMINUM EXTRUDED FRAME AND STEEL CHANNEL HOUSING.	AIRCRAFT CABLE	ACRYLIC	3500K 6100LUM 80CRI	0-10V DIM TO 10%	53.5	120V	>115	METALUX #8WSL
H1	LOW BAY; DIE CAST; MARINE GRADE ALUMINUM LED FIXTURE. 120DEGREE BEAM ANGLE. FROSTED GLASS LENSE. CONFIRM FINAL FINISH AND MOUNTING HEIGHT WITH ARCHITECT.	PENDANT	GLASS	4000K 12000LUM 80CRI	0-10V DIM TO 10%	70	120V	>140	ALL GREEN LIGHTING MODEL UFO-G2
INV	CENTRAL INVERTER TO POWER SELECT INTERIOR AND EXTERIOR LIGHTS FOR EMERGENCY LIGHTING EGRESS AS NOTED ON PLANS. UNITARY DEVICE INCLUDING HOUSING, BATTERIES, CHARGER, TRANSFER DEVICES. UL924 LISTED. 277V INPUT + 277V OUTPUT. 2 OUTPUT BREAKERS. INPUT BREAKER. SELF-TESTING SELF-DIAGNOSTICS. NOMINAL 1500W OUTPUT.	WALL	-	-	-	1500	120V		LVS MODEL CEPS-A-1500W
P1	4INCH SQUARE BY 24 INCH HEIGHT LED PENDANT FIXTURE. INTEGRAL DRIVER WITH BODY AND DOWNLIGHT ILLUMINATION. COORDINATE FINAL FINISH WITH ARCHITECT.	CABLE	ACRYLIC	3500K 3800LUM 80CRI	0-10V DIM TO 10%	41	120V	>90	MANNING LIGHTING MODEL #LP-672-04
S4	4 FT LENGTH BY 4-INCH WIDE LED SLOT LIGHT WITH PAINTED ALUMINUM HOUSING AND OPAL POLYCARBONATE ROLL OPTICS. CONFIRM FINAL COLOR AND MOUNTING HEIGHT WITH ARCHITECT.	RECESSED	POLY-CARBONATE	3500K 800LUM/FT 80CRI	0-10V DIM TO 10%	9W/FT	120V	>100	ZUMTOBEL MODEL #SL3I
S4R	4 FT LENGTH BY 2.5-INCH WIDE LED SLOT LIGHT. METAL HOUSING WITH OPAL POLYCARBONATE LENSE. FLANGELESS, AFTER SHEETROCK. PROVIDE JOINING KIT AND PERIMETER MOUNITING WHERE REQUIRED. CONFIRM FINAL COLOR AND MOUNTING HEIGHT WITH ARCHITECT.	RECESSED	POLY-CARBONATE	3500K 400LUM/FT 80CRI	0-10V DIM TO 10%	4.5W/FT	120V	>100	ZUMTOBEL MODEL #SL3
S6	6 FT LENGTH BY 4-INCH WIDE LED SLOT LIGHT WITH PAINTED ALUMINUM HOUSING AND OPAL POLYCARBONATE ROLL OPTICS. CONFIRM FINAL COLOR AND MOUNTING HEIGHT WITH ARCHITECT.	RECESSED	POLY-CARBONATE	3500K 800LUM/FT 80CRI	0-10V DIM TO 10%	9W/FT	120V	>100	ZUMTOBEL MODEL #SL3I
S8	8 FT LENGTH BY 4-INCH WIDE LED SLOT LIGHT WITH PAINTED ALUMINUM HOUSING AND OPAL POLYCARBONATE ROLL OPTICS. CONFIRM FINAL COLOR AND MOUNTING HEIGHT WITH ARCHITECT.	RECESSED	POLY-CARBONATE	3500K 800LUM/FT 80CRI	0-10V DIM TO 10%	9W/FT	120V	>100	ZUMTOBEL MODEL #SL3I
S10	10 FT LENGTH BY 4-INCH WIDE LED SLOT LIGHT WITH PAINTED ALUMINUM HOUSING AND OPAL POLYCARBONATE ROLL OPTICS. CONFIRM FINAL COLOR AND MOUNTING HEIGHT WITH ARCHITECT.	RECESSED	POLY-CARBONATE	3500K 800LUM/FT 80CRI	0-10V DIM TO 10%	9W/FT	120V	>100	ZUMTOBEL MODEL #SL3I
S12	12 FT LENGTH BY 4-INCH WIDE LED SLOT LIGHT WITH PAINTED ALUMINUM HOUSING AND OPAL POLYCARBONATE ROLL OPTICS. CONFIRM FINAL COLOR AND MOUNTING HEIGHT WITH ARCHITECT.	RECESSED	POLY-CARBONATE	3500K 800LUM/FT 80CRI	0-10V DIM TO 10%	9W/FT	120V	>100	ZUMTOBEL MODEL #SL3I
SP1	SITE POLE MOUNTED AREA LUMINAIRE WITH ARM + HEAD. 12FT ROUND STRAIGHT STEEL POLE WITH TYPE V WIDE PHOTOMETRIC DISTRIBUTION. PROVIDE 36" HIGH (ABOVE GRADE) CONCRETE BASE. FULL TRIM COVER ON BASE. SEE DETAIL. COORDINATE FINAL FINISH COLOR SELECTION WITH ARCHITECT.	12FT POLE	ACRYLIC + FLAT GLASS	4000K 10,000LUM 70CRI	0-10V DIM TO 10%	87	120V	>100	US ARCHITECTURAL LIGHTING MODEL #VLL LED
SP2	SITE POLE MOUNTED AREA LUMINAIRE WITH ARM + HEAD. 12FT ROUND STRAIGHT STEEL POLE WITH TYPE IV MEDIUM PHOTOMETRIC DISTRIBUTION. PROVIDE 36" HIGH (ABOVE GRADE) CONCRETE BASE. FULL TRIM COVER ON BASE. SEE DETAIL. COORDINATE FINAL FINISH COLOR SELECTION WITH ARCHITECT.	12FT POLE	ACRYLIC + FLAT GLASS	4000K 10,000LUM 70CRI	0-10V DIM TO 10%	87	120V	>100	US ARCHITECTURAL LIGHTING MODEL #VLL LED
V1	24"L X 3"W X 4"D LED WALL MOUNTED VANITY. WHITE ACRYLIC LENS. COORDINATE FINAL COLOR SELECTION AND MOUNTING WITH ARCHITECT.	WALL	SMOOTH ACRYLIC	3500K LUM 80CRI	0-10V DIM TO 10%	15	120V		EVERGREEN LIGHTING MODEL #CYL-WL
W1	SITE EXTERIOR WALL MOUNTED AREA LIGHTING FIXTURE. HEAVY CAST ALUMINUM CONSTRUCTION. COORDINATE FINAL; HEIGHT; LOCATION AND COLOR SELECTION WITH ARCHITECT. WET LOCATION LISTED.	WALL	ACRYLIC	4000K 4100LUM 70CRI	0-10V DIM TO 10%	44	120V	>90	US ARCHITECTURAL LIGHTING MODEL #QSRW1-LED
X1	EXIT LIGHT (NO HEADS), INDOOR APPLICATION. ALUMINUM HOUSING AND HIGH IMPACT ACRYLIC PANEL WITH RED LETTERS. INTERNAL BATTERIES WITH SELF-DIAGNOSTICS. PROVIDE DIRECTIONAL ARROWS PER PLANS; COORDINATE WITH EGRESS PLAN. CONNECT TO UNSWITCHED LEG OF LOCAL LIGHTING CIRCUIT. UNIVERSAL MOUNT WALL\CEILING\BACK\EDGE.	UNIVERSAL	-	LED	SELF-DIAGNOSTIC	1.5	120V		SURE-LITES MODEL #APLX7RG
X2	COMBINATION EXIT LIGHT WITH LIGHTING HEADS, INDOOR APPLICATION. THERMAL PLASTIC WHITE HOUSING, RED LETTERS. INTERNAL BATTERIES WITH SELF-DIAGNOSTICS. KNOCK-OUT CHEVRON DIRECTIONAL ARROWS; COORDINATE WITH EGRESS PLAN. INCLUDE OPTIONAL SECOND FACE PLATE. CONNECT TO UNSWITCHED LEG OF LOCAL LIGHTING CIRCUIT. UNIVERSAL MOUNT WALL\CEILING\BACK\EDGE.	UNIVERSAL	-	LED	SELF-DIAGNOSTIC	1.5	120V		SURE-LITES MODEL #APC

NOTES:
1. LISTED MANUFACTURER NAME AND CATALOG NUMBERS REPRESENT MANUFACTURER BASE MODEL\SERIES AND IS NOT INTENDED TO LIST ALL PART NUMBERS\CODES REQUIRED TO MEET THE REQUIREMENTS LISTED AND DESCRIBED IN THE SCHEDULE. COORDINATE WITH MANUFACTURER\VENDOR AND SUBMIT SHOP DRAWING DEFINING ALL PART NUMBERS TO MEET THE REQUIREMENTS LISTED IN THIS SCHEDULE. IT IS THE RESPONSIBILITY OF THE CONTRACTOR TO ORDER LUMINAIRES TO INCLUDE ALL PARTS INDICATED ON SCHEDULE FOR EACH LUMINAIRE. SUBMITTALS ARE TO CALL OUT EACH PART CLEARLY.
2. COORDINATION LUMINAIRE MOUNTING WITH ARCHITECT PRIOR TO SHOP DRAWING SUBMITTAL AND PRIOR TO STARTING ANY INSTALLATION WORK. COORDINATE WITH ARCHITECTURAL REQUIREMENTS AND CONSTRUCTION CONDITIONS.
3. ALL LUMINAIRES ON THIS LUMINAIRE SCHEDULED ARE APPROVED FOR BID AS THE BASIS OF DESIGN AND DEFINE THE MINIMUM REQUIREMENTS. ACCEPTANCE OF ANY PROPOSED ALTERNATES MUST BE REVIEWED AND APPROVED BY ENGINEER, ARCHITECT AND OWNER.

EEA CONSULTING ENGINEERS
4343 Pan American Freeway NE, Suite 239
Albuquerque, NM 87107
Main: 505.877.4499 - www.eeace.com
Project #: 2019MEP-25

G. DONALD DUDLEY AIA
ARCHITECT
ARCHITECTURE • INTERIORS • PLANNING
AIA • NCARB • LEED AP
SIMMS TOWER STUDIO 850
400 GOLD AVENUE SW
ALBUQUERQUE, NEW MEXICO
87102
TEL 505.243.8100

MICHAEL GRIESEL
NEW MEXICO
20486
PROFESSIONAL ENGINEER
04/13/2020

NEW BUILDING FOR:
RIO RANCHO SENIOR CENTER
CITY OF RIO RANCHO NEW MEXICO

MARK	DATE	DESCRIPTION

GDDA PROJECT NO: 18–137
DATE: 04/13/2020
DRAWN BY: CA
CHECKED BY: MG
SET NO:
SHEET TITLE: ELECTRICAL SCHEDULES

E701

SWITCHBOARD: MSB

AIC: 60,000
VOLT: 120 / 208 3P,4W
BUS: 1600A MCB: 1600A

LOAD TYPE	NOTES	LOAD SERVED	BKR SIZE	POLES	CKT No.	PHASE LOAD A	PHASE LOAD B	PHASE LOAD C	TOTAL (VA)
SF		PANEL L1A	600	3	1	30992	37120	40276	108388
		FUTURE EXPANSION	1200		2				
		SPACE	100		3				
		SPD	20		4				
		SPARE	20		5				
		SPARE	20		6				
		SPARE	20		7				
		SPARE	20		8				
		SPARE	20		9				
		SPARE	20		10				
		SPARE	20		11				
		SPARE	20		12				
		SPARE	20		13				
		SPARE	20		14				
		SPARE	20		15				
		SPARE	20		16				
		SPARE	20		17				
		SPARE	20		18				
		SPARE	20		19				
		SPARE	20		20				
		LOCATION:				30992	37120	40276	PHASE VA
					CONNECTED		108388		PANEL VA

LOAD TYPE
R RECEPTACLE (FIRST 10kVA AT 100% REMAINDER AT 50% 12630
C CONTINUOUS (125%) 8616
OTHER LOADS (100%) 86235
DEMAND 107481 PANEL VA
298 PANEL AMPS

NOTES
1.
2.
3.

SF = SUBFED PANEL

PANELBOARD L1A

GENERAL PANEL DATA
VOLT: 120 / 208 3PH,4W AIC: 42,000
BUS: 600A MCB - MOUNT: SURFACE

LOAD TYPE	NOTES	LOAD SERVED	BKR SIZE	VA	CKT No.	PHASE LOAD A	PHASE LOAD B	PHASE LOAD C	CKT No.	VA	BKR SIZE	LOAD SERVED	NOTES	LOAD TYPE
R		REC - MECH; ELEC	20	540	1	1540			2	1000	20	HOT BOX		R
R		REC - VESTIBULE	20	360	3		540		4	180	20	MONJMENT SIGN		R
R		REC - LOUNGE	20	360	5			720	6	360	20	REC - EXTERIOR		R
		REC - LOUNGE	20	360	7	720			8	360	20	REC - EXTERIOR		R
C		LTG - LOUNGE	20	1296	9		1644		10	348	20	LTG - EXTERIOR		C
C		LTG - VESTIBULE	20	832	11			1180	12	348	20	LTG - EXTERIOR		C
		REC - FREEZER	20	576	13	924			14	348	20	LTG - EXTERIOR		C
		REC - ICE MAKER	20	852	15		1200		16	348	20	LTG - EXTERIOR		C
		REC - REACH-IN REFRIGERATOR	20	264	17			612	18	348	20	LTG - EXTERIOR		C
		REC - REACH-IN HEATED CABINET	20	936	19	1168			20	232	20	LTG - EXTERIOR BLDG NW		C
		GAS RANGE HOOD & FAN	20	180	21		500		22	320	20	LTG - EXTERIOR BLDG SE		C
		DISHWASHER HOOD & FAN	20	180	23			4022	24	3842				
		UH-1	20	1500	25	5342			26	3842	45	RTU-6		
				1500	27		5342		28	3842				
		UH-2	20	1500	29			2772	30	1272				
				1500	31	2772			32	1272	20	KEF-1		
		SPARE	20		33		1272		34	1272				
		WASTE DISPOSER	20	726	35			1422	36	696	20	KEF-2		
				726	37	11943			38	11217				SF
		DISH MACHINE	100	7883	39		18157		40	10274	225	L1B		SF
				7883	41			20963	42	13080				SF
		MOTORIZED DOOR	20	1000	43	1180			44	180	20	REC ROOF		
R		REC - DATA RACK	20	180	45		5583		46	5403				
		IRRIGATION HOX BOX	20	300	47			5703	48	5403	50	RTU-5		
			20		49	5403			50	5403				
			20		51		2882		52	2882				
			20		53			2882	54	2882	30	RTU-4		
			20		55	2882			56	2882				
			20		57		3842		58	3842				
			20		59			3842	60	3842	45	RTU-3		
			20		61	3842			62	3842				
			20		63		0		64		20			
			20		65			0	66		20			
			20		67	0			68		20			
			20		69		0		70		20			
			20		71			0	72		20			
		SPARE	20		73	0			74		20	SPARE		
		SPARE	20		75		0		76		20	SPARE		
		SPARE	20		77			0	78		20	SPARE		
		SPARE	20		79	0			80		20	SPARE		
		SPARE	20		81		0		82		20	SPARE		
		SPARE	20		83			0	84		20	SPARE		
		LOCATION:				37716	40962	44118	PHASE VA					
					TOTAL CONNECTED:		122796		PANEL VA			341 AMPS		

LOAD TYPE
R RECEPTACLE (FIRST 10kVA AT 100% REMAINDER AT 50% 12630 R VA 35 AMPS
C CONTINUOUS (125%) 8616 C VA 24 AMPS
OTHER LOADS (100%) 100643 OTHER VA 279 AMPS
TOTAL DEMAND: 121889 PANEL VA 338 AMPS

NOTES
1.
2.
3.
4.

SF = SUBFED PANEL

PANELBOARD L1B

GENERAL PANEL DATA
VOLT: 120 / 208 3PH,4W AIC: 22,000
BUS: 225 MCB - MOUNT: SURFACE

LOAD TYPE	NOTES	LOAD SERVED	BKR SIZE	VA	CKT No.	PHASE LOAD A	PHASE LOAD B	PHASE LOAD C	CKT No.	VA	BKR SIZE	LOAD SERVED	NOTES	LOAD TYPE
R		REC - LOUNGE 109	20	900	1	2533			2	1633	20	LTG - AREA B		C
R		REC - GAME ROOM 111	20	900	3		950		4	50	20	CLASSROOM B - EXHAUST HOOD		
R		REC - LOBBY 108	20	900	5			1900	6	1000	20	MOTORIZED DOOR		
R		REC - 540	20	540	7	540			8		20	SPARE		
R		REC - EXTERIOR VESTIBULE	20	180	9		180		10		20	SPARE		
R		REC - WATER FOUNTAIN	20	180	11			180	12		20	SPARE		
R		REC - WOMEN'S/MEN'S	20	360	13	360			14		20	SPARE		
R		REC - STORAGE/JAN.	20	540	15		540		16		20	SPARE		
R		REC - CLASSROOM A	20	900	17			900	18		20	SPARE		
R		REC - CLASSROOM A FLR REC	20	360	19	360			20		20	SPARE		
R		REC CLASSROOM A	20	360	21		360		22		20	SPARE		
R		REC - CLASSROOM B FLR REC	20	180	23			2942	24	2762				
R		REC - CLASSROOM B	20	500	25	3262			26	2762	30	RTU-2	1	
R		REC - CLASSROOM B	30	1000	27		3762		28	2762				
R				1000	29			3762	30	2762				
R		REC - CLASSROOM B RANGE HOOD	20	500	31	3262			32	2762	30	RTU-1	1	
R		REC - CLASSROOM B	20	1000	33		3762		34	2762				
R		REC - CLASSROOM B	20	360	35			1056	36	696	20	EF-1		
R		REC - MULTI-PURPOSE ROOM	20	720	37	900			38	180	20	REC ROOF		
R		REC - MULTI-PURPOSE ROOM	20	540	39		720		40	180	20	REC ROOF	1	
C		LTG - MULTI-PURPOSE ROOM	20	840	41			2340	42	1500	20	UH-3		
		SPARE	20		43	1500			44	1500				
		SPARE	20		45		1500		46	1500	20	UH-4		
		SPARE	20		47			1500	48	1500				
		SPARE	20		49	0			50		20	SPARE		
		SPARE	20		51		0		52		20	SPARE		
		SPARE	20		53			0	54		20	SPARE		
		LOCATION:				12717	11774	14580	PHASE VA					
					TOTAL CONNECTED:		39071		PANEL VA			108 AMPS		

LOAD TYPE
R RECEPTACLE (FIRST 10kVA AT 100% REMAINDER AT 50% 10980 R VA 30 AMPS
C CONTINUOUS (125%) 3091 C VA 9
OTHER LOADS (100%) 24678 OTHER VA 68 AMPS
TOTAL DEMAND: 38729 PANEL VA 108 AMPS

NOTES
1. ALTERANTE #1
2.
3.
4.

SF = SUBFED PANEL

EEA CONSULTING ENGINEERS
4343 Pan American Freeway NE, Suite 239
Albuquerque, NM 87107
Main: 505.877.4499 - www.eeace.com
Project #: 2019MEP-25

SIMMS TOWER STUDIO 850
400 GOLD AVENUE SW
ALBUQUERQUE, NEW MEXICO
87102
TEL 505.243.8100

G. DONALD DUDLEY AIA
ARCHITECT
ARCHITECTURE • INTERIORS • PLANNING
AIA • NCARB • LEED AP

MICHAEL GRIESEL
NEW MEXICO
20486
PROFESSIONAL ENGINEER
04/13/2020

NEW BUILDING FOR:
RIO RANCHO SENIOR CENTER
CITY OF RIO RANCHO NEW MEXICO

MARK	DATE	DESCRIPTION

GDDA PROJECT NO: 18-137
DATE: 04/13/2020
DRAWN BY: CA
CHECKED BY: MG
SET NO:
SHEET TITLE: ELECTRICAL SCHEDULES

E702

DRAFT

AIA® Document A101™ – 2017

Standard Form of Agreement Between Owner and Contractor where the basis of payment is a Stipulated Sum

AGREEMENT made as of the « » day of « » in the year « »
(In words, indicate day, month and year.)

BETWEEN the Owner:
(Name, legal status, address and other information)

« City of Rio Rancho
3200 Civic Center Circle NE
Rio Rancho, New Mexico 87144
505-891-5010

University of New Mexico
MSC09 5300
1 University of New Mexico
Albuquerque, New Mexico 87131-5001
505-272-5849 »« »
« »
« »
« »

and the Contractor:
(Name, legal status, address and other information)

« »« »
« »
« »
« »

for the following Project:
(Name, location and detailed description)

«Rio Rancho Senior Center»
«Broadmoor Blvd at City Center»
«New 7500 sf Senior Center for the City of Rio Rancho»

The Architect:
(Name, legal status, address and other information)

«G. Donald Dudley Architect, Ltd. »«Limited Liability Corporation »
«400 Gold Ave SW / Studio 850 »
«Albuquerque, NM 87102 »
«Tel: (505) 243-8100 »

The Owner and Contractor agree as follows.

ADDITIONS AND DELETIONS: The author of this document has added information needed for its completion. The author may also have revised the text of the original AIA standard form. An *Additions and Deletions Report* that notes added information as well as revisions to the standard form text is available from the author and should be reviewed.

This document has important legal consequences. Consultation with an attorney is encouraged with respect to its completion or modification.

The parties should complete A101™–2017, Exhibit A, Insurance and Bonds, contemporaneously with this Agreement. AIA Document A201™–2017, General Conditions of the Contract for Construction, is adopted in this document by reference. Do not use with other general conditions unless this document is modified.

ELECTRONIC COPYING of any portion of this AIA® Document to another electronic file is prohibited and constitutes a violation of copyright laws as set forth in the footer of this document.

AIA Document A101™ – 2017. Copyright © 1915, 1918, 1925, 1937, 1951, 1958, 1961, 1963, 1967, 1974, 1977, 1987, 1991, 1997, 2007 and 2017 by The American Institute of Architects. **All rights reserved. WARNING: This AIA® Document is protected by U.S. Copyright Law and International Treaties. Unauthorized reproduction or distribution of this AIA® Document, or any portion of it, may result in severe civil and criminal penalties, and will be prosecuted to the maximum extent possible under the law.** This draft was produced by AIA software at 17:18:38 ET on 04/14/2020 under Order No.7390039801 which expires on 04/14/2021, and is not for resale.
User Notes: (1330477396)

TABLE OF ARTICLES

1 THE CONTRACT DOCUMENTS

2 THE WORK OF THIS CONTRACT

3 DATE OF COMMENCEMENT AND SUBSTANTIAL COMPLETION

4 CONTRACT SUM

5 PAYMENTS

6 DISPUTE RESOLUTION

7 TERMINATION OR SUSPENSION

8 MISCELLANEOUS PROVISIONS

9 ENUMERATION OF CONTRACT DOCUMENTS

EXHIBIT A INSURANCE AND BONDS

ARTICLE 1 THE CONTRACT DOCUMENTS

The Contract Documents consist of this Agreement, Conditions of the Contract (General, Supplementary, and other Conditions), Drawings, Specifications, Addenda issued prior to execution of this Agreement, other documents listed in this Agreement, and Modifications issued after execution of this Agreement, all of which form the Contract, and are as fully a part of the Contract as if attached to this Agreement or repeated herein. The Contract represents the entire and integrated agreement between the parties hereto and supersedes prior negotiations, representations, or agreements, either written or oral. An enumeration of the Contract Documents, other than a Modification, appears in Article 9.

ARTICLE 2 THE WORK OF THIS CONTRACT

The Contractor shall fully execute the Work described in the Contract Documents, except as specifically indicated in the Contract Documents to be the responsibility of others.

ARTICLE 3 DATE OF COMMENCEMENT AND SUBSTANTIAL COMPLETION

§ 3.1 The date of commencement of the Work shall be:
(Check one of the following boxes.)

[« »] The date of this Agreement.

[« »] A date set forth in a notice to proceed issued by the Owner.

[« »] Established as follows:
(Insert a date or a means to determine the date of commencement of the Work.)

« »

If a date of commencement of the Work is not selected, then the date of commencement shall be the date of this Agreement.

§ 3.2 The Contract Time shall be measured from the date of commencement of the Work.

§ 3.3 Substantial Completion

§ 3.3.1 Subject to adjustments of the Contract Time as provided in the Contract Documents, the Contractor shall achieve Substantial Completion of the entire Work:
(Check one of the following boxes and complete the necessary information.)

[« »] Not later than « » (« ») calendar days from the date of commencement of the Work.

AIA Document A101™ – 2017. Copyright © 1915, 1918, 1925, 1937, 1951, 1958, 1961, 1963, 1967, 1974, 1977, 1987, 1991, 1997, 2007 and 2017 by The American Institute of Architects. **All rights reserved. WARNING: This AIA® Document is protected by U.S. Copyright Law and International Treaties. Unauthorized reproduction or distribution of this AIA® Document, or any portion of it, may result in severe civil and criminal penalties, and will be prosecuted to the maximum extent possible under the law.** This draft was produced by AIA software at 17:18:38 ET on 04/14/2020 under Order No.7390039801 which expires on 04/14/2021, and is not for resale.
User Notes: (1330477396)

[« »] By the following date: « »

§ 3.3.2 Subject to adjustments of the Contract Time as provided in the Contract Documents, if portions of the Work are to be completed prior to Substantial Completion of the entire Work, the Contractor shall achieve Substantial Completion of such portions by the following dates:

Portion of Work	Substantial Completion Date

§ 3.3.3 If the Contractor fails to achieve Substantial Completion as provided in this Section 3.3, liquidated damages, if any, shall be assessed as set forth in Section 4.5.

ARTICLE 4 CONTRACT SUM

§ 4.1 The Owner shall pay the Contractor the Contract Sum in current funds for the Contractor's performance of the Contract. The Contract Sum shall be « » ($ « »), subject to additions and deductions as provided in the Contract Documents.

§ 4.2 Alternates

§ 4.2.1 Alternates, if any, included in the Contract Sum:

Item	Price

§ 4.2.2 Subject to the conditions noted below, the following alternates may be accepted by the Owner following execution of this Agreement. Upon acceptance, the Owner shall issue a Modification to this Agreement.
(Insert below each alternate and the conditions that must be met for the Owner to accept the alternate.)

Item	Price	Conditions for Acceptance

§ 4.3 Allowances, if any, included in the Contract Sum:
(Identify each allowance.)

Item	Price

§ 4.4 Unit prices, if any:
(Identify the item and state the unit price and quantity limitations, if any, to which the unit price will be applicable.)

Item	Units and Limitations	Price per Unit ($0.00)

§ 4.5 Liquidated damages, if any:
(Insert terms and conditions for liquidated damages, if any.)

« »

§ 4.6 Other:
(Insert provisions for bonus or other incentives, if any, that might result in a change to the Contract Sum.)

« »

AIA Document A101™ – 2017. Copyright © 1915, 1918, 1925, 1937, 1951, 1958, 1961, 1963, 1967, 1974, 1977, 1987, 1991, 1997, 2007 and 2017 by The American Institute of Architects. **All rights reserved. WARNING: This AIA® Document is protected by U.S. Copyright Law and International Treaties. Unauthorized reproduction or distribution of this AIA® Document, or any portion of it, may result in severe civil and criminal penalties, and will be prosecuted to the maximum extent possible under the law.** This draft was produced by AIA software at 17:18:38 ET on 04/14/2020 under Order No.7390039801 which expires on 04/14/2021, and is not for resale.
User Notes: (1330477396)

ARTICLE 5 PAYMENTS

§ 5.1 Progress Payments

§ 5.1.1 Based upon Applications for Payment submitted to the Architect by the Contractor and Certificates for Payment issued by the Architect, the Owner shall make progress payments on account of the Contract Sum to the Contractor as provided below and elsewhere in the Contract Documents.

§ 5.1.2 The period covered by each Application for Payment shall be one calendar month ending on the last day of the month, or as follows:

« »

§ 5.1.3 Provided that an Application for Payment is received by the Architect not later than the « » day of a month, the Owner shall make payment of the amount certified to the Contractor not later than the « » day of the « » month. If an Application for Payment is received by the Architect after the application date fixed above, payment of the amount certified shall be made by the Owner not later than « » (« ») days after the Architect receives the Application for Payment.
(Federal, state or local laws may require payment within a certain period of time.)

§ 5.1.4 Each Application for Payment shall be based on the most recent schedule of values submitted by the Contractor in accordance with the Contract Documents. The schedule of values shall allocate the entire Contract Sum among the various portions of the Work. The schedule of values shall be prepared in such form, and supported by such data to substantiate its accuracy, as the Architect may require. This schedule of values shall be used as a basis for reviewing the Contractor's Applications for Payment.

§ 5.1.5 Applications for Payment shall show the percentage of completion of each portion of the Work as of the end of the period covered by the Application for Payment.

§ 5.1.6 In accordance with AIA Document A201™–2017, General Conditions of the Contract for Construction, and subject to other provisions of the Contract Documents, the amount of each progress payment shall be computed as follows:

§ 5.1.6.1 The amount of each progress payment shall first include:

- **.1** That portion of the Contract Sum properly allocable to completed Work;
- **.2** That portion of the Contract Sum properly allocable to materials and equipment delivered and suitably stored at the site for subsequent incorporation in the completed construction, or, if approved in advance by the Owner, suitably stored off the site at a location agreed upon in writing; and
- **.3** That portion of Construction Change Directives that the Architect determines, in the Architect's professional judgment, to be reasonably justified.

§ 5.1.6.2 The amount of each progress payment shall then be reduced by:

- **.1** The aggregate of any amounts previously paid by the Owner;
- **.2** The amount, if any, for Work that remains uncorrected and for which the Architect has previously withheld a Certificate for Payment as provided in Article 9 of AIA Document A201–2017;
- **.3** Any amount for which the Contractor does not intend to pay a Subcontractor or material supplier, unless the Work has been performed by others the Contractor intends to pay;
- **.4** For Work performed or defects discovered since the last payment application, any amount for which the Architect may withhold payment, or nullify a Certificate of Payment in whole or in part, as provided in Article 9 of AIA Document A201–2017; and
- **.5** Retainage withheld pursuant to Section 5.1.7.

§ 5.1.7 Retainage

§ 5.1.7.1 For each progress payment made prior to Substantial Completion of the Work, the Owner may withhold the following amount, as retainage, from the payment otherwise due:
(Insert a percentage or amount to be withheld as retainage from each Application for Payment. The amount of retainage may be limited by governing law.)

« »

AIA Document A101™ – 2017. Copyright © 1915, 1918, 1925, 1937, 1951, 1958, 1961, 1963, 1967, 1974, 1977, 1987, 1991, 1997, 2007 and 2017 by The American Institute of Architects. **All rights reserved. WARNING: This AIA® Document is protected by U.S. Copyright Law and International Treaties. Unauthorized reproduction or distribution of this AIA® Document, or any portion of it, may result in severe civil and criminal penalties, and will be prosecuted to the maximum extent possible under the law.** This draft was produced by AIA software at 17:18:38 ET on 04/14/2020 under Order No.7390039801 which expires on 04/14/2021, and is not for resale.
User Notes: (1330477396)

§ 5.1.7.1.1 The following items are not subject to retainage:
(Insert any items not subject to the withholding of retainage, such as general conditions, insurance, etc.)

« »

§ 5.1.7.2 Reduction or limitation of retainage, if any, shall be as follows:
(If the retainage established in Section 5.1.7.1 is to be modified prior to Substantial Completion of the entire Work, including modifications for Substantial Completion of portions of the Work as provided in Section 3.3.2, insert provisions for such modifications.)

« »

§ 5.1.7.3 Except as set forth in this Section 5.1.7.3, upon Substantial Completion of the Work, the Contractor may submit an Application for Payment that includes the retainage withheld from prior Applications for Payment pursuant to this Section 5.1.7. The Application for Payment submitted at Substantial Completion shall not include retainage as follows:
(Insert any other conditions for release of retainage upon Substantial Completion.)

« »

§ 5.1.8 If final completion of the Work is materially delayed through no fault of the Contractor, the Owner shall pay the Contractor any additional amounts in accordance with Article 9 of AIA Document A201–2017.

§ 5.1.9 Except with the Owner's prior approval, the Contractor shall not make advance payments to suppliers for materials or equipment which have not been delivered and stored at the site.

§ 5.2 Final Payment

§ 5.2.1 Final payment, constituting the entire unpaid balance of the Contract Sum, shall be made by the Owner to the Contractor when

- **.1** the Contractor has fully performed the Contract except for the Contractor's responsibility to correct Work as provided in Article 12 of AIA Document A201–2017, and to satisfy other requirements, if any, which extend beyond final payment; and
- **.2** a final Certificate for Payment has been issued by the Architect.

§ 5.2.2 The Owner's final payment to the Contractor shall be made no later than 30 days after the issuance of the Architect's final Certificate for Payment, or as follows:

« »

§ 5.3 Interest

Payments due and unpaid under the Contract shall bear interest from the date payment is due at the rate stated below, or in the absence thereof, at the legal rate prevailing from time to time at the place where the Project is located.
(Insert rate of interest agreed upon, if any.)

« » % « »

ARTICLE 6 DISPUTE RESOLUTION

§ 6.1 Initial Decision Maker

The Architect will serve as the Initial Decision Maker pursuant to Article 15 of AIA Document A201–2017, unless the parties appoint below another individual, not a party to this Agreement, to serve as the Initial Decision Maker.
(If the parties mutually agree, insert the name, address and other contact information of the Initial Decision Maker, if other than the Architect.)

« »
« »
« »
« »

AIA Document A101™ – 2017. Copyright © 1915, 1918, 1925, 1937, 1951, 1958, 1961, 1963, 1967, 1974, 1977, 1987, 1991, 1997, 2007 and 2017 by The American Institute of Architects. **All rights reserved. WARNING: This AIA® Document is protected by U.S. Copyright Law and International Treaties. Unauthorized reproduction or distribution of this AIA® Document, or any portion of it, may result in severe civil and criminal penalties, and will be prosecuted to the maximum extent possible under the law.** This draft was produced by AIA software at 17:18:38 ET on 04/14/2020 under Order No.7390039801 which expires on 04/14/2021, and is not for resale.
User Notes: (1330477396)

§ 6.2 Binding Dispute Resolution
For any Claim subject to, but not resolved by, mediation pursuant to Article 15 of AIA Document A201–2017, the method of binding dispute resolution shall be as follows:
(Check the appropriate box.)

[« »] Arbitration pursuant to Section 15.4 of AIA Document A201–2017

[« »] Litigation in a court of competent jurisdiction

[« »] Other *(Specify)*

« »

If the Owner and Contractor do not select a method of binding dispute resolution, or do not subsequently agree in writing to a binding dispute resolution method other than litigation, Claims will be resolved by litigation in a court of competent jurisdiction.

ARTICLE 7 TERMINATION OR SUSPENSION

§ 7.1 The Contract may be terminated by the Owner or the Contractor as provided in Article 14 of AIA Document A201–2017.

§ 7.1.1 If the Contract is terminated for the Owner's convenience in accordance with Article 14 of AIA Document A201–2017, then the Owner shall pay the Contractor a termination fee as follows:
(Insert the amount of, or method for determining, the fee, if any, payable to the Contractor following a termination for the Owner's convenience.)

« »

§ 7.2 The Work may be suspended by the Owner as provided in Article 14 of AIA Document A201–2017.

ARTICLE 8 MISCELLANEOUS PROVISIONS

§ 8.1 Where reference is made in this Agreement to a provision of AIA Document A201–2017 or another Contract Document, the reference refers to that provision as amended or supplemented by other provisions of the Contract Documents.

§ 8.2 The Owner's representative:
(Name, address, email address, and other information)

« »
« »
« »
« »
« »
« »

§ 8.3 The Contractor's representative:
(Name, address, email address, and other information)

« »
« »
« »
« »
« »
« »

§ 8.4 Neither the Owner's nor the Contractor's representative shall be changed without ten days' prior notice to the other party.

AIA Document A101™ – 2017. Copyright © 1915, 1918, 1925, 1937, 1951, 1958, 1961, 1963, 1967, 1974, 1977, 1987, 1991, 1997, 2007 and 2017 by The American Institute of Architects. **All rights reserved. WARNING: This AIA® Document is protected by U.S. Copyright Law and International Treaties. Unauthorized reproduction or distribution of this AIA® Document, or any portion of it, may result in severe civil and criminal penalties, and will be prosecuted to the maximum extent possible under the law.** This draft was produced by AIA software at 17:18:38 ET on 04/14/2020 under Order No.7390039801 which expires on 04/14/2021, and is not for resale.
User Notes: (1330477396)

§ 8.5 Insurance and Bonds

§ 8.5.1 The Owner and the Contractor shall purchase and maintain insurance as set forth in AIA Document A101™–2017, Standard Form of Agreement Between Owner and Contractor where the basis of payment is a Stipulated Sum, Exhibit A, Insurance and Bonds, and elsewhere in the Contract Documents.

§ 8.5.2 The Contractor shall provide bonds as set forth in AIA Document A101™–2017 Exhibit A, and elsewhere in the Contract Documents.

§ 8.6 Notice in electronic format, pursuant to Article 1 of AIA Document A201–2017, may be given in accordance with AIA Document E203™–2013, Building Information Modeling and Digital Data Exhibit, if completed, or as otherwise set forth below:
(If other than in accordance with AIA Document E203–2013, insert requirements for delivering notice in electronic format such as name, title, and email address of the recipient and whether and how the system will be required to generate a read receipt for the transmission.)

« »

§ 8.7 Other provisions:

« »

ARTICLE 9 ENUMERATION OF CONTRACT DOCUMENTS

§ 9.1 This Agreement is comprised of the following documents:

.1 AIA Document A101™–2017, Standard Form of Agreement Between Owner and Contractor

.2 AIA Document A101™–2017, Exhibit A, Insurance and Bonds

.3 AIA Document A201™–2017, General Conditions of the Contract for Construction

.4 AIA Document E203™–2013, Building Information Modeling and Digital Data Exhibit, dated as indicated below:
(Insert the date of the E203-2013 incorporated into this Agreement.)

« »

.5 Drawings

Number	Title	Date

.6 Specifications

Section	Title	Date	Pages

.7 Addenda, if any:

Number	Date	Pages

Portions of Addenda relating to bidding or proposal requirements are not part of the Contract Documents unless the bidding or proposal requirements are also enumerated in this Article 9.

.8 Other Exhibits:
(Check all boxes that apply and include appropriate information identifying the exhibit where required.)

[« »] AIA Document E204™–2017, Sustainable Projects Exhibit, dated as indicated below:
(Insert the date of the E204-2017 incorporated into this Agreement.)

« »

AIA Document A101™ – 2017. Copyright © 1915, 1918, 1925, 1937, 1951, 1958, 1961, 1963, 1967, 1974, 1977, 1987, 1991, 1997, 2007 and 2017 by The American Institute of Architects. **All rights reserved. WARNING: This AIA® Document is protected by U.S. Copyright Law and International Treaties. Unauthorized reproduction or distribution of this AIA® Document, or any portion of it, may result in severe civil and criminal penalties, and will be prosecuted to the maximum extent possible under the law.** This draft was produced by AIA software at 17:18:38 ET on 04/14/2020 under Order No.7390039801 which expires on 04/14/2021, and is not for resale.
User Notes: (1330477396)

[« »] The Sustainability Plan:

Title	Date	Pages

[« »] Supplementary and other Conditions of the Contract:

Document	Title	Date	Pages

.9 Other documents, if any, listed below:
(List here any additional documents that are intended to form part of the Contract Documents. AIA Document A201™–2017 provides that the advertisement or invitation to bid, Instructions to Bidders, sample forms, the Contractor's bid or proposal, portions of Addenda relating to bidding or proposal requirements, and other information furnished by the Owner in anticipation of receiving bids or proposals, are not part of the Contract Documents unless enumerated in this Agreement. Any such documents should be listed here only if intended to be part of the Contract Documents.)

« »

This Agreement entered into as of the day and year first written above.

OWNER *(Signature)*	**CONTRACTOR** *(Signature)*
« »« »	« »« »
(Printed name and title)	*(Printed name and title)*

AIA Document A101™ – 2017. Copyright © 1915, 1918, 1925, 1937, 1951, 1958, 1961, 1963, 1967, 1974, 1977, 1987, 1991, 1997, 2007 and 2017 by The American Institute of Architects. **All rights reserved. WARNING: This AIA® Document is protected by U.S. Copyright Law and International Treaties. Unauthorized reproduction or distribution of this AIA® Document, or any portion of it, may result in severe civil and criminal penalties, and will be prosecuted to the maximum extent possible under the law.** This draft was produced by AIA software at 17:18:38 ET on 04/14/2020 under Order No.7390039801 which expires on 04/14/2021, and is not for resale.
User Notes: (1330477396)

DRAFT

AIA® Document A201™ – 2017

General Conditions of the Contract for Construction

for the following PROJECT:
(Name and location or address)

«Construction of New~~Rio Rancho~~ Senior Center»
«3241 Broadmoor Blvd ~~at City Center~~
Rio Rancho, New Mexico 87144»

THE OWNER:
(Name, legal status and address)

«
« City of Rio Rancho
3200 Civic Center Circle NE
Rio Rancho, New Mexico 87144
505-891-5010

University of New Mexico
MSC09 5300
1 University of New Mexico
Albuquerque, New Mexico 87131-5001
505-272-5849 »« »
« »

THE ARCHITECT:
(Name, legal status and address)

«G. Donald Dudley Architect, Ltd. »«Limited Liability Corporation »
«400 Gold Ave SW / Studio 850, Albuquerque, NM 87102 »

TABLE OF ARTICLES

1 GENERAL PROVISIONS

2 OWNER

3 CONTRACTOR

4 ARCHITECT

5 SUBCONTRACTORS

6 CONSTRUCTION BY OWNER OR BY SEPARATE CONTRACTORS

7 CHANGES IN THE WORK

8 TIME

9 PAYMENTS AND COMPLETION

10 PROTECTION OF PERSONS AND PROPERTY

11 INSURANCE AND BONDS

ADDITIONS AND DELETIONS: The author of this document has added information needed for its completion. The author may also have revised the text of the original AIA standard form. An *Additions and Deletions Report* that notes added information as well as revisions to the standard form text is available from the author and should be reviewed.

This document has important legal consequences. Consultation with an attorney is encouraged with respect to its completion or modification.

For guidance in modifying this document to include supplementary conditions, see AIA Document A503™, Guide for Supplementary Conditions.

ELECTRONIC COPYING of any portion of this AIA® Document to another electronic file is prohibited and constitutes a violation of copyright laws as set forth in the footer of this document.

AIA Document A201™ – 2017. Copyright © 1911, 1915, 1918, 1925, 1937, 1951, 1958, 1961, 1963, 1966, 1970, 1976, 1987, 1997, 2007 and 2017 by The American Institute of Architects. **All rights reserved. WARNING: This AIA® Document is protected by U.S. Copyright Law and International Treaties. Unauthorized reproduction or distribution of this AIA® Document, or any portion of it, may result in severe civil and criminal penalties, and will be prosecuted to the maximum extent possible under the law.** This draft was produced by AIA software at 17:14:05 ET on 04/14/2020 under Order No.7760153018 which expires on 04/14/2021, and is not for resale.
User Notes: (1295017041)

12 UNCOVERING AND CORRECTION OF WORK

13 MISCELLANEOUS PROVISIONS

14 TERMINATION OR SUSPENSION OF THE CONTRACT

15 CLAIMS AND DISPUTES

DRAFT

AIA Document A201™ – 2017. Copyright © 1911, 1915, 1918, 1925, 1937, 1951, 1958, 1961, 1963, 1966, 1970, 1976, 1987, 1997, 2007 and 2017 by The American Institute of Architects. **All rights reserved. WARNING: This AIA® Document is protected by U.S. Copyright Law and International Treaties. Unauthorized reproduction or distribution of this AIA® Document, or any portion of it, may result in severe civil and criminal penalties, and will be prosecuted to the maximum extent possible under the law.** This draft was produced by AIA software at 17:14:05 ET on 04/14/2020 under Order No.7760153018 which expires on 04/14/2021, and is not for resale.
User Notes: (1295017041)

INDEX

(Topics and numbers in bold are Section headings.)

Acceptance of Nonconforming Work
9.6.6, 9.9.3, **12.3**
Acceptance of Work
9.6.6, 9.8.2, 9.9.3, 9.10.1, 9.10.3, 12.3
Access to Work
3.16, 6.2.1, 12.1
Accident Prevention
10
Acts and Omissions
3.2, 3.3.2, 3.12.8, 3.18, 4.2.3, 8.3.1, 9.5.1, 10.2.5, 10.2.8, 13.3.2, 14.1, 15.1.2, 15.2
Addenda
1.1.1
Additional Costs, Claims for
3.7.4, 3.7.5, 10.3.2, 15.1.5
Additional Inspections and Testing
9.4.2, 9.8.3, 12.2.1, **13.4**
Additional Time, Claims for
3.2.4, 3.7.4, 3.7.5, 3.10.2, 8.3.2, **15.1.6**
Administration of the Contract
3.1.3, **4.2**, 9.4, 9.5
Advertisement or Invitation to Bid
1.1.1
Aesthetic Effect
4.2.13
Allowances
3.8
Applications for Payment
4.2.5, 7.3.9, 9.2, **9.3**, 9.4, 9.5.1, 9.5.4, 9.6.3, 9.7, 9.10
Approvals
2.1.1, 2.3.1, 2.5, 3.1.3, 3.10.2, 3.12.8, 3.12.9, 3.12.10.1, 4.2.7, 9.3.2, 13.4.1
Arbitration
8.3.1, 15.3.2, **15.4**
ARCHITECT
4
Architect, Definition of
4.1.1
Architect, Extent of Authority
2.5, 3.12.7, 4.1.2, 4.2, 5.2, 6.3, 7.1.2, 7.3.4, 7.4, 9.2, 9.3.1, 9.4, 9.5, 9.6.3, 9.8, 9.10.1, 9.10.3, 12.1, 12.2.1, 13.4.1, 13.4.2, 14.2.2, 14.2.4, 15.1.4, 15.2.1
Architect, Limitations of Authority and Responsibility
2.1.1, 3.12.4, 3.12.8, 3.12.10, 4.1.2, 4.2.1, 4.2.2, 4.2.3, 4.2.6, 4.2.7, 4.2.10, 4.2.12, 4.2.13, 5.2.1, 7.4, 9.4.2, 9.5.4, 9.6.4, 15.1.4, 15.2
Architect's Additional Services and Expenses
2.5, 12.2.1, 13.4.2, 13.4.3, 14.2.4
Architect's Administration of the Contract
3.1.3, 3.7.4, 15.2, 9.4.1, 9.5
Architect's Approvals
2.5, 3.1.3, 3.5, 3.10.2, 4.2.7
Architect's Authority to Reject Work
3.5, 4.2.6, 12.1.2, 12.2.1
Architect's Copyright
1.1.7, 1.5
Architect's Decisions
3.7.4, 4.2.6, 4.2.7, 4.2.11, 4.2.12, 4.2.13, 4.2.14, 6.3, 7.3.4, 7.3.9, 8.1.3, 8.3.1, 9.2, 9.4.1, 9.5, 9.8.4, 9.9.1, 13.4.2, 15.2
Architect's Inspections
3.7.4, 4.2.2, 4.2.9, 9.4.2, 9.8.3, 9.9.2, 9.10.1, 13.4
Architect's Instructions
3.2.4, 3.3.1, 4.2.6, 4.2.7, 13.4.2
Architect's Interpretations
4.2.11, 4.2.12
Architect's Project Representative
4.2.10
Architect's Relationship with Contractor
1.1.2, 1.5, 2.3.3, 3.1.3, 3.2.2, 3.2.3, 3.2.4, 3.3.1, 3.4.2, 3.5, 3.7.4, 3.7.5, 3.9.2, 3.9.3, 3.10, 3.11, 3.12, 3.16, 3.18, 4.1.2, 4.2, 5.2, 6.2.2, 7, 8.3.1, 9.2, 9.3, 9.4, 9.5, 9.7, 9.8, 9.9, 10.2.6, 10.3, 11.3, 12, 13.3.2, 13.4, 15.2
Architect's Relationship with Subcontractors
1.1.2, 4.2.3, 4.2.4, 4.2.6, 9.6.3, 9.6.4, 11.3
Architect's Representations
9.4.2, 9.5.1, 9.10.1
Architect's Site Visits
3.7.4, 4.2.2, 4.2.9, 9.4.2, 9.5.1, 9.9.2, 9.10.1, 13.4
Asbestos
10.3.1
Attorneys' Fees
3.18.1, 9.6.8, 9.10.2, 10.3.3
Award of Separate Contracts
6.1.1, 6.1.2
Award of Subcontracts and Other Contracts for Portions of the Work
5.2
Basic Definitions
1.1
Bidding Requirements
1.1.1
Binding Dispute Resolution
8.3.1, 9.7, 11.5, 13.1, 15.1.2, 15.1.3, 15.2.1, 15.2.5, 15.2.6.1, 15.3.1, 15.3.2, 15.3.3, 15.4.1
Bonds, Lien
7.3.4.4, 9.6.8, 9.10.2, 9.10.3
Bonds, Performance, and Payment
7.3.4.4, 9.6.7, 9.10.3, **11.1.2**, 11.1.3, **11.5**
Building Information Models Use and Reliance
1.8
Building Permit
3.7.1
Capitalization
1.3
Certificate of Substantial Completion
9.8.3, 9.8.4, 9.8.5
Certificates for Payment
4.2.1, 4.2.5, 4.2.9, 9.3.3, **9.4**, 9.5, 9.6.1, 9.6.6, 9.7, 9.10.1, 9.10.3, 14.1.1.3, 14.2.4, 15.1.4
Certificates of Inspection, Testing or Approval
13.4.4

AIA Document A201™ – 2017. Copyright © 1911, 1915, 1918, 1925, 1937, 1951, 1958, 1961, 1963, 1966, 1970, 1976, 1987, 1997, 2007 and 2017 by The American Institute of Architects. **All rights reserved. WARNING: This AIA® Document is protected by U.S. Copyright Law and International Treaties. Unauthorized reproduction or distribution of this AIA® Document, or any portion of it, may result in severe civil and criminal penalties, and will be prosecuted to the maximum extent possible under the law.** This draft was produced by AIA software at 17:14:05 ET on 04/14/2020 under Order No.7760153018 which expires on 04/14/2021, and is not for resale.
User Notes: (1295017041)

Certificates of Insurance
9.10.2
Change Orders
1.1.1, 3.4.2, 3.7.4, 3.8.2.3, 3.11, 3.12.8, 4.2.8, 5.2.3, 7.1.2, 7.1.3, **7.2**, 7.3.2, 7.3.7, 7.3.9, 7.3.10, 8.3.1, 9.3.1.1, 9.10.3, 10.3.2, 11.2, 11.5, 12.1.2
Change Orders, Definition of
7.2.1
CHANGES IN THE WORK
2.2.2, 3.11, 4.2.8, **7**, 7.2.1, 7.3.1, 7.4, 8.3.1, 9.3.1.1, 11.5
Claims, Definition of
15.1.1
Claims, Notice of
1.6.2, 15.1.3
CLAIMS AND DISPUTES
3.2.4, 6.1.1, 6.3, 7.3.9, 9.3.3, 9.10.4, 10.3.3, **15**, 15.4
Claims and Timely Assertion of Claims
15.4.1
Claims for Additional Cost
3.2.4, 3.3.1, 3.7.4, 7.3.9, 9.5.2, 10.2.5, 10.3.2, **15.1.5**
Claims for Additional Time
3.2.4, 3.3.1, 3.7.4, 6.1.1, 8.3.2, 9.5.2, 10.3.2, **15.1.6**
Concealed or Unknown Conditions, Claims for
3.7.4
Claims for Damages
3.2.4, 3.18, 8.3.3, 9.5.1, 9.6.7, 10.2.5, 10.3.3, 11.3, 11.3.2, 14.2.4, 15.1.7
Claims Subject to Arbitration
15.4.1
Cleaning Up
3.15, 6.3
Commencement of the Work, Conditions Relating to
2.2.1, 3.2.2, 3.4.1, 3.7.1, 3.10.1, 3.12.6, 5.2.1, 5.2.3, 6.2.2, 8.1.2, 8.2.2, 8.3.1, 11.1, 11.2, **15.1.5**
Commencement of the Work, Definition of
8.1.2
Communications
3.9.1, **4.2.4**
Completion, Conditions Relating to
3.4.1, 3.11, 3.15, 4.2.2, 4.2.9, 8.2, 9.4.2, 9.8, 9.9.1, 9.10, 12.2, 14.1.2, 15.1.2
COMPLETION, PAYMENTS AND
9
Completion, Substantial
3.10.1, 4.2.9, 8.1.1, 8.1.3, 8.2.3, 9.4.2, 9.8, 9.9.1, 9.10.3, 12.2, 15.1.2
Compliance with Laws
2.3.2, 3.2.3, 3.6, 3.7, 3.12.10, 3.13, 9.6.4, 10.2.2, 13.1, 13.3, 13.4.1, 13.4.2, 13.5, 14.1.1, 14.2.1.3, 15.2.8, 15.4.2, 15.4.3
Concealed or Unknown Conditions
3.7.4, 4.2.8, 8.3.1, 10.3
Conditions of the Contract
1.1.1, 6.1.1, 6.1.4
Consent, Written
3.4.2, 3.14.2, 4.1.2, 9.8.5, 9.9.1, 9.10.2, 9.10.3, 13.2, 15.4.4.2
Consolidation or Joinder
15.4.4
CONSTRUCTION BY OWNER OR BY SEPARATE CONTRACTORS
1.1.4, **6**
Construction Change Directive, Definition of
7.3.1
Construction Change Directives
1.1.1, 3.4.2, 3.11, 3.12.8, 4.2.8, 7.1.1, 7.1.2, 7.1.3, **7.3**, 9.3.1.1
Construction Schedules, Contractor's
3.10, 3.11, 3.12.1, 3.12.2, 6.1.3, 15.1.6.2
Contingent Assignment of Subcontracts
5.4, 14.2.2.2
Continuing Contract Performance
15.1.4
Contract, Definition of
1.1.2
CONTRACT, TERMINATION OR SUSPENSION OF THE
5.4.1.1, 5.4.2, 11.5, **14**
Contract Administration
3.1.3, 4, 9.4, 9.5
Contract Award and Execution, Conditions Relating to
3.7.1, 3.10, 5.2, 6.1
Contract Documents, Copies Furnished and Use of
1.5.2, 2.3.6, 5.3
Contract Documents, Definition of
1.1.1
Contract Sum
2.2.2, 2.2.4, 3.7.4, 3.7.5, 3.8, 3.10.2, 5.2.3, 7.3, 7.4, **9.1**, 9.2, 9.4.2, 9.5.1.4, 9.6.7, 9.7, 10.3.2, 11.5, 12.1.2, 12.3, 14.2.4, 14.3.2, 15.1.4.2, **15.1.5, 15.2.5**
Contract Sum, Definition of
9.1
Contract Time
1.1.4, 2.2.1, 2.2.2, 3.7.4, 3.7.5, 3.10.2, 5.2.3, 6.1.5, 7.2.1.3, 7.3.1, 7.3.5, 7.3.6, 7, 7, 7.3.10, 7.4, 8.1.1, 8.2.1, 8.2.3, 8.3.1, 9.5.1, 9.7, 10.3.2, 12.1.1, 12.1.2, 14.3.2, 15.1.4.2, 15.1.6.1, 15.2.5
Contract Time, Definition of
8.1.1
CONTRACTOR
3
Contractor, Definition of
3.1, 6.1.2
Contractor's Construction and Submittal Schedules
3.10, 3.12.1, 3.12.2, 4.2.3, 6.1.3, 15.1.6.2
Contractor's Employees
2.2.4, 3.3.2, 3.4.3, 3.8.1, 3.9, 3.18.2, 4.2.3, 4.2.6, 10.2, 10.3, 11.3, 14.1, 14.2.1.1
Contractor's Liability Insurance
11.1
Contractor's Relationship with Separate Contractors and Owner's Forces
3.12.5, 3.14.2, 4.2.4, 6, 11.3, 12.2.4

AIA Document A201™ – 2017. Copyright © 1911, 1915, 1918, 1925, 1937, 1951, 1958, 1961, 1963, 1966, 1970, 1976, 1987, 1997, 2007 and 2017 by The American Institute of Architects. **All rights reserved. WARNING: This AIA® Document is protected by U.S. Copyright Law and International Treaties. Unauthorized reproduction or distribution of this AIA® Document, or any portion of it, may result in severe civil and criminal penalties, and will be prosecuted to the maximum extent possible under the law.** This draft was produced by AIA software at 17:14:05 ET on 04/14/2020 under Order No.7760153018 which expires on 04/14/2021, and is not for resale.
User Notes: (1295017041)

Contractor's Relationship with Subcontractors
1.2.2, 2.2.4, 3.3.2, 3.18.1, 3.18.2, 4.2.4, 5, 9.6.2, 9.6.7, 9.10.2, 11.2, 11.3, 11.4
Contractor's Relationship with the Architect
1.1.2, 1.5, 2.3.3, 3.1.3, 3.2.2, 3.2.3, 3.2.4, 3.3.1, 3.4.2, 3.5.1, 3.7.4, 3.10, 3.11, 3.12, 3.16, 3.18, 4.2, 5.2, 6.2.2, 7, 8.3.1, 9.2, 9.3, 9.4, 9.5, 9.7, 9.8, 9.9, 10.2.6, 10.3, 11.3, 12, 13.4, 15.1.3, 15.2.1
Contractor's Representations
3.2.1, 3.2.2, 3.5, 3.12.6, 6.2.2, 8.2.1, 9.3.3, 9.8.2
Contractor's Responsibility for Those Performing the Work
3.3.2, 3.18, 5.3, 6.1.3, 6.2, 9.5.1, 10.2.8
Contractor's Review of Contract Documents
3.2
Contractor's Right to Stop the Work
2.2.2, 9.7
Contractor's Right to Terminate the Contract
14.1
Contractor's Submittals
3.10, 3.11, 3.12, 4.2.7, 5.2.1, 5.2.3, 9.2, 9.3, 9.8.2, 9.8.3, 9.9.1, 9.10.2, 9.10.3
Contractor's Superintendent
3.9, 10.2.6
Contractor's Supervision and Construction Procedures
1.2.2, 3.3, 3.4, 3.12.10, 4.2.2, 4.2.7, 6.1.3, 6.2.4, 7.1.3, 7.3.4, 7.3.6, 8.2, 10, 12, 14, 15.1.4
Coordination and Correlation
1.2, 3.2.1, 3.3.1, 3.10, 3.12.6, 6.1.3, 6.2.1
Copies Furnished of Drawings and Specifications
1.5, 2.3.6, 3.11
Copyrights
1.5, **3.17**
Correction of Work
2.5, 3.7.3, 9.4.2, 9.8.2, 9.8.3, 9.9.1, 12.1.2, **12.2**, 12.3, 15.1.3.1, 15.1.3.2, 15.2.1
Correlation and Intent of the Contract Documents
1.2
Cost, Definition of
7.3.4
Costs
2.5, 3.2.4, 3.7.3, 3.8.2, 3.15.2, 5.4.2, 6.1.1, 6.2.3, 7.3.3.3, 7.3.4, 7.3.8, 7.3.9, 9.10.2, 10.3.2, 10.3.6, 11.2, 12.1.2, 12.2.1, 12.2.4, 13.4, 14
Cutting and Patching
3.14, 6.2.5
Damage to Construction of Owner or Separate Contractors
3.14.2, 6.2.4, 10.2.1.2, 10.2.5, 10.4, 12.2.4
Damage to the Work
3.14.2, 9.9.1, 10.2.1.2, 10.2.5, 10.4, 12.2.4
Damages, Claims for
3.2.4, 3.18, 6.1.1, 8.3.3, 9.5.1, 9.6.7, 10.3.3, 11.3.2, 11.3, 14.2.4, 15.1.7
Damages for Delay
6.2.3, 8.3.3, 9.5.1.6, 9.7, 10.3.2, 14.3.2
Date of Commencement of the Work, Definition of
8.1.2
Date of Substantial Completion, Definition of
8.1.3
Day, Definition of
8.1.4
Decisions of the Architect
3.7.4, 4.2.6, 4.2.7, 4.2.11, 4.2.12, 4.2.13, 6.3, 7.3.4, 7.3.9, 8.1.3, 8.3.1, 9.2, 9.4, 9.5.1, 9.8.4, 9.9.1, 13.4.2, 14.2.2, 14.2.4, 15.1, 15.2
Decisions to Withhold Certification
9.4.1, **9.5**, 9.7, 14.1.1.3
Defective or Nonconforming Work, Acceptance, Rejection and Correction of
2.5, 3.5, 4.2.6, 6.2.3, 9.5.1, 9.5.3, 9.6.6, 9.8.2, 9.9.3, 9.10.4, 12.2.1
Definitions
1.1, 2.1.1, 3.1.1, 3.5, 3.12.1, 3.12.2, 3.12.3, 4.1.1, 5.1, 6.1.2, 7.2.1, 7.3.1, 8.1, 9.1, 9.8.1, 15.1.1
Delays and Extensions of Time
3.2, **3.7.4**, 5.2.3, 7.2.1, 7.3.1, **7.4**, **8.3**, 9.5.1, **9.7**, 10.3.2, **10.4**, 14.3.2, **15.1.6**, 15.2.5
Digital Data Use and Transmission
1.7
Disputes
6.3, 7.3.9, 15.1, 15.2
Documents and Samples at the Site
3.11
Drawings, Definition of
1.1.5
Drawings and Specifications, Use and Ownership of
3.11
Effective Date of Insurance
8.2.2
Emergencies
10.4, 14.1.1.2, **15.1.5**
Employees, Contractor's
3.3.2, 3.4.3, 3.8.1, 3.9, 3.18.2, 4.2.3, 4.2.6, 10.2, 10.3.3, 11.3, 14.1, 14.2.1.1
Equipment, Labor, or Materials
1.1.3, 1.1.6, 3.4, 3.5, 3.8.2, 3.8.3, 3.12, 3.13, 3.15.1, 4.2.6, 4.2.7, 5.2.1, 6.2.1, 7.3.4, 9.3.2, 9.3.3, 9.5.1.3, 9.10.2, 10.2.1, 10.2.4, 14.2.1.1, 14.2.1.2
Execution and Progress of the Work
1.1.3, 1.2.1, 1.2.2, 2.3.4, 2.3.6, 3.1, 3.3.1, 3.4.1, 3.7.1, 3.10.1, 3.12, 3.14, 4.2, 6.2.2, 7.1.3, 7.3.6, 8.2, 9.5.1, 9.9.1, 10.2, 10.3, 12.1, 12.2, 14.2, 14.3.1, 15.1.4
Extensions of Time
3.2.4, 3.7.4, 5.2.3, 7.2.1, 7.3, 7.4, 9.5.1, 9.7, 10.3.2, 10.4, 14.3, 15.1.6, **15.2.5**
Failure of Payment
9.5.1.3, **9.7**, 9.10.2, 13.5, 14.1.1.3, 14.2.1.2
Faulty Work
(See Defective or Nonconforming Work)
Final Completion and Final Payment
4.2.1, 4.2.9, 9.8.2, **9.10**, 12.3, 14.2.4, 14.4.3
Financial Arrangements, Owner's
2.2.1, 13.2.2, 14.1.1.4

AIA Document A201™ – 2017. Copyright © 1911, 1915, 1918, 1925, 1937, 1951, 1958, 1961, 1963, 1966, 1970, 1976, 1987, 1997, 2007 and 2017 by The American Institute of Architects. **All rights reserved. WARNING: This AIA® Document is protected by U.S. Copyright Law and International Treaties. Unauthorized reproduction or distribution of this AIA® Document, or any portion of it, may result in severe civil and criminal penalties, and will be prosecuted to the maximum extent possible under the law.** This draft was produced by AIA software at 17:14:05 ET on 04/14/2020 under Order No.7760153018 which expires on 04/14/2021, and is not for resale.
User Notes: (1295017041)

GENERAL PROVISIONS
1
Governing Law
13.1
Guarantees (See Warranty)
Hazardous Materials and Substances
10.2.4, **10.3**
Identification of Subcontractors and Suppliers
5.2.1
Indemnification
3.17, **3.18**, 9.6.8, 9.10.2, 10.3.3, 11.3
Information and Services Required of the Owner
2.1.2, **2.2**, 2.3, 3.2.2, 3.12.10.1, 6.1.3, 6.1.4, 6.2.5, 9.6.1, 9.9.2, 9.10.3, 10.3.3, 11.2, 13.4.1, 13.4.2, 14.1.1.4, 14.1.4, 15.1.4
Initial Decision
15.2
Initial Decision Maker, Definition of
1.1.8
Initial Decision Maker, Decisions
14.2.4, 15.1.4.2, 15.2.1, 15.2.2, 15.2.3, 15.2.4, 15.2.5
Initial Decision Maker, Extent of Authority
14.2.4, 15.1.4.2, 15.2.1, 15.2.2, 15.2.3, 15.2.4, 15.2.5
Injury or Damage to Person or Property
10.2.8, 10.4
Inspections
3.1.3, 3.3.3, 3.7.1, 4.2.2, 4.2.6, 4.2.9, 9.4.2, 9.8.3, 9.9.2, 9.10.1, 12.2.1, 13.4
Instructions to Bidders
1.1.1
Instructions to the Contractor
3.2.4, 3.3.1, 3.8.1, 5.2.1, 7, 8.2.2, 12, 13.4.2
Instruments of Service, Definition of
1.1.7
Insurance
6.1.1, 7.3.4, 8.2.2, 9.3.2, 9.8.4, 9.9.1, 9.10.2, 10.2.5, **11**
Insurance, Notice of Cancellation or Expiration
11.1.4, 11.2.3
Insurance, Contractor's Liability
11.1
Insurance, Effective Date of
8.2.2, 14.4.2
Insurance, Owner's Liability
11.2
Insurance, Property
10.2.5, 11.2, 11.4, 11.5
Insurance, Stored Materials
9.3.2
INSURANCE AND BONDS
11
Insurance Companies, Consent to Partial Occupancy
9.9.1
Insured loss, Adjustment and Settlement of
11.5
Intent of the Contract Documents
1.2.1, 4.2.7, 4.2.12, 4.2.13
Interest
13.5
Interpretation
1.1.8, 1.2.3, **1.4**, 4.1.1, 5.1, 6.1.2, 15.1.1
Interpretations, Written
4.2.11, 4.2.12
Judgment on Final Award
15.4.2
Labor and Materials, Equipment
1.1.3, 1.1.6, **3.4**, 3.5, 3.8.2, 3.8.3, 3.12, 3.13, 3.15.1, 5.2.1, 6.2.1, 7.3.4, 9.3.2, 9.3.3, 9.5.1.3, 9.10.2, 10.2.1, 10.2.4, 14.2.1.1, 14.2.1.2
Labor Disputes
8.3.1
Laws and Regulations
1.5, 2.3.2, 3.2.3, 3.2.4, 3.6, 3.7, 3.12.10, 3.13, 9.6.4, 9.9.1, 10.2.2, 13.1, 13.3.1, 13.4.2, 13.5, 14, 15.2.8, 15.4
Liens
2.1.2, 9.3.1, 9.3.3, 9.6.8, 9.10.2, 9.10.4, 15.2.8
Limitations, Statutes of
12.2.5, 15.1.2, 15.4.1.1
Limitations of Liability
3.2.2, 3.5, 3.12.10, 3.12.10.1, 3.17, 3.18.1, 4.2.6, 4.2.7, 6.2.2, 9.4.2, 9.6.4, 9.6.7, 9.6.8, 10.2.5, 10.3.3, 11.3, 12.2.5, 13.3.1
Limitations of Time
2.1.2, 2.2, 2.5, 3.2.2, 3.10, 3.11, 3.12.5, 3.15.1, 4.2.7, 5.2, 5.3, 5.4.1, 6.2.4, 7.3, 7.4, 8.2, 9.2, 9.3.1, 9.3.3, 9.4.1, 9.5, 9.6, 9.7, 9.8, 9.9, 9.10, 12.2, 13.4, 14, 15, 15.1.2, 15.1.3, 15.1.5
Materials, Hazardous
10.2.4, **10.3**
Materials, Labor, Equipment and
1.1.3, 1.1.6, 3.4.1, 3.5, 3.8.2, 3.8.3, 3.12, 3.13, 3.15.1, 5.2.1, 6.2.1, 7.3.4, 9.3.2, 9.3.3, 9.5.1.3, 9.10.2, 10.2.1.2, 10.2.4, 14.2.1.1, 14.2.1.2
Means, Methods, Techniques, Sequences and Procedures of Construction
3.3.1, 3.12.10, 4.2.2, 4.2.7, 9.4.2
Mechanic's Lien
2.1.2, 9.3.1, 9.3.3, 9.6.8, 9.10.2, 9.10.4, 15.2.8
Mediation
8.3.1, 15.1.3.2, 15.2.1, 15.2.5, 15.2.6, **15.3**, 15.4.1, 15.4.1.1
Minor Changes in the Work
1.1.1, 3.4.2, 3.12.8, 4.2.8, 7.1, **7.4**
MISCELLANEOUS PROVISIONS
13
Modifications, Definition of
1.1.1
Modifications to the Contract
1.1.1, 1.1.2, 2.5, 3.11, 4.1.2, 4.2.1, 5.2.3, 7, 8.3.1, 9.7, 10.3.2
Mutual Responsibility
6.2
Nonconforming Work, Acceptance of
9.6.6, 9.9.3, **12.3**

AIA Document A201™ – 2017. Copyright © 1911, 1915, 1918, 1925, 1937, 1951, 1958, 1961, 1963, 1966, 1970, 1976, 1987, 1997, 2007 and 2017 by The American Institute of Architects. **All rights reserved. WARNING: This AIA® Document is protected by U.S. Copyright Law and International Treaties. Unauthorized reproduction or distribution of this AIA® Document, or any portion of it, may result in severe civil and criminal penalties, and will be prosecuted to the maximum extent possible under the law.** This draft was produced by AIA software at 17:14:05 ET on 04/14/2020 under Order No.7760153018 which expires on 04/14/2021, and is not for resale.
User Notes: (1295017041)

Nonconforming Work, Rejection and Correction of
2.4, 2.5, 3.5, 4.2.6, 6.2.4, 9.5.1, 9.8.2, 9.9.3, 9.10.4, 12.2
Notice
1.6, 1.6.1, 1.6.2, 2.1.2, 2.2.2., 2.2.3, 2.2.4, 2.5, 3.2.4, 3.3.1, 3.7.4, 3.7.5, 3.9.2, 3.12.9, 3.12.10, 5.2.1, 7.4, 8.2.2 9.6.8, 9.7, 9.10.1, 10.2.8, 10.3.2, 11.5, 12.2.2.1, 13.4.1, 13.4.2, 14.1, 14.2.2, 14.4.2, 15.1.3, 15.1.5, 15.1.6, 15.4.1
Notice of Cancellation or Expiration of Insurance
11.1.4, 11.2.3
Notice of Claims
1.6.2, 2.1.2, 3.7.4, 9.6.8, 10.2.8, **15.1.3**, 15.1.5, 15.1.6, 15.2.8, 15.3.2, 15.4.1
Notice of Testing and Inspections
13.4.1, 13.4.2
Observations, Contractor's
3.2, 3.7.4
Occupancy
2.3.1, 9.6.6, 9.8
Orders, Written
1.1.1, 2.4, 3.9.2, 7, 8.2.2, 11.5, 12.1, 12.2.2.1, 13.4.2, 14.3.1
OWNER
2
Owner, Definition of
2.1.1
Owner, Evidence of Financial Arrangements
2.2, 13.2.2, 14.1.1.4
Owner, Information and Services Required of the
2.1.2, **2.2**, 2.3, 3.2.2, 3.12.10, 6.1.3, 6.1.4, 6.2.5, 9.3.2, 9.6.1, 9.6.4, 9.9.2, 9.10.3, 10.3.3, 11.2, 13.4.1, 13.4.2, 14.1.1.4, 14.1.4, 15.1.4
Owner's Authority
1.5, 2.1.1, 2.3.32.4, 2.5, 3.4.2, 3.8.1, 3.12.10, 3.14.2, 4.1.2, 4.2.4, 4.2.9, 5.2.1, 5.2.4, 5.4.1, 6.1, 6.3, 7.2.1, 7.3.1, 8.2.2, 8.3.1, 9.3.2, 9.5.1, 9.6.4, 9.9.1, 9.10.2, 10.3.2, 11.4, 11.5, 12.2.2, 12.3, 13.2.2, 14.3, 14.4, 15.2.7
Owner's Insurance
11.2
Owner's Relationship with Subcontractors
1.1.2, 5.2, 5.3, 5.4, 9.6.4, 9.10.2, 14.2.2
Owner's Right to Carry Out the Work
2.5, 14.2.2
Owner's Right to Clean Up
6.3
Owner's Right to Perform Construction and to Award Separate Contracts
6.1
Owner's Right to Stop the Work
2.4
Owner's Right to Suspend the Work
14.3
Owner's Right to Terminate the Contract
14.2, 14.4
Ownership and Use of Drawings, Specifications and Other Instruments of Service
1.1.1, 1.1.6, 1.1.7, **1.5**, 2.3.6, 3.2.2, 3.11, 3.17, 4.2.12, 5.3
Partial Occupancy or Use
9.6.6, **9.9**
Patching, Cutting and
3.14, 6.2.5
Patents
3.17
Payment, Applications for
4.2.5, 7.3.9, 9.2, **9.3**, 9.4, 9.5, 9.6.3, 9.7, 9.8.5, 9.10.1, 14.2.3, 14.2.4, 14.4.3
Payment, Certificates for
4.2.5, 4.2.9, 9.3.3, **9.4**, 9.5, 9.6.1, 9.6.6, 9.7, 9.10.1, 9.10.3, 14.1.1.3, 14.2.4
Payment, Failure of
9.5.1.3, **9.7**, 9.10.2, 13.5, 14.1.1.3, 14.2.1.2
Payment, Final
4.2.1, 4.2.9, **9.10**, 12.3, 14.2.4, 14.4.3
Payment Bond, Performance Bond and
7.3.4.4, 9.6.7, 9.10.3, **11.1.2**
Payments, Progress
9.3, **9.6**, 9.8.5, 9.10.3, 14.2.3, 15.1.4
PAYMENTS AND COMPLETION
9
Payments to Subcontractors
5.4.2, 9.5.1.3, 9.6.2, 9.6.3, 9.6.4, 9.6.7, 14.2.1.2
PCB
10.3.1
Performance Bond and Payment Bond
7.3.4.4, 9.6.7, 9.10.3, **11.1.2**
Permits, Fees, Notices and Compliance with Laws
2.3.1, **3.7**, 3.13, 7.3.4.4, 10.2.2
PERSONS AND PROPERTY, PROTECTION OF
10
Polychlorinated Biphenyl
10.3.1
Product Data, Definition of
3.12.2
Product Data and Samples, Shop Drawings
3.11, **3.12**, 4.2.7
Progress and Completion
4.2.2, **8.2**, 9.8, 9.9.1, 14.1.4, 15.1.4
Progress Payments
9.3, **9.6**, 9.8.5, 9.10.3, 14.2.3, 15.1.4
Project, Definition of
1.1.4
Project Representatives
4.2.10
Property Insurance
10.2.5, **11.2**
Proposal Requirements
1.1.1
PROTECTION OF PERSONS AND PROPERTY
10

AIA Document A201™ – 2017. Copyright © 1911, 1915, 1918, 1925, 1937, 1951, 1958, 1961, 1963, 1966, 1970, 1976, 1987, 1997, 2007 and 2017 by The American Institute of Architects. **All rights reserved. WARNING: This AIA® Document is protected by U.S. Copyright Law and International Treaties. Unauthorized reproduction or distribution of this AIA® Document, or any portion of it, may result in severe civil and criminal penalties, and will be prosecuted to the maximum extent possible under the law.** This draft was produced by AIA software at 17:14:05 ET on 04/14/2020 under Order No.7760153018 which expires on 04/14/2021, and is not for resale.
User Notes: (1295017041)

Regulations and Laws
1.5, 2.3.2, 3.2.3, 3.6, 3.7, 3.12.10, 3.13, 9.6.4, 9.9.1, 10.2.2, 13.1, 13.3, 13.4.1, 13.4.2, 13.5, 14, 15.2.8, 15.4
Rejection of Work
4.2.6, 12.2.1
Releases and Waivers of Liens
9.3.1, 9.10.2
Representations
3.2.1, 3.5, 3.12.6, 8.2.1, 9.3.3, 9.4.2, 9.5.1, 9.10.1
Representatives
2.1.1, 3.1.1, 3.9, 4.1.1, 4.2.10, 13.2.1
Responsibility for Those Performing the Work
3.3.2, 3.18, 4.2.2, 4.2.3, 5.3, 6.1.3, 6.2, 6.3, 9.5.1, 10
Retainage
9.3.1, 9.6.2, 9.8.5, 9.9.1, 9.10.2, 9.10.3
Review of Contract Documents and Field Conditions by Contractor
3.2, 3.12.7, 6.1.3
Review of Contractor's Submittals by Owner and Architect
3.10.1, 3.10.2, 3.11, 3.12, 4.2, 5.2, 6.1.3, 9.2, 9.8.2
Review of Shop Drawings, Product Data and Samples by Contractor
3.12
Rights and Remedies
1.1.2, 2.4, 2.5, 3.5, 3.7.4, 3.15.2, 4.2.6, 5.3, 5.4, 6.1, 6.3, 7.3.1, 8.3, 9.5.1, 9.7, 10.2.5, 10.3, 12.2.1, 12.2.2, 12.2.4, **13.3**, 14, 15.4
Royalties, Patents and Copyrights
3.17
Rules and Notices for Arbitration
15.4.1
Safety of Persons and Property
10.2, 10.4
Safety Precautions and Programs
3.3.1, 4.2.2, 4.2.7, 5.3, **10.1**, 10.2, 10.4
Samples, Definition of
3.12.3
Samples, Shop Drawings, Product Data and
3.11, **3.12**, 4.2.7
Samples at the Site, Documents and
3.11
Schedule of Values
9.2, 9.3.1
Schedules, Construction
3.10, 3.12.1, 3.12.2, 6.1.3, 15.1.6.2
Separate Contracts and Contractors
1.1.4, 3.12.5, 3.14.2, 4.2.4, 4.2.7, 6, 8.3.1, 12.1.2
Separate Contractors, Definition of
6.1.1
Shop Drawings, Definition of
3.12.1
Shop Drawings, Product Data and Samples
3.11, **3.12**, 4.2.7
Site, Use of
3.13, 6.1.1, 6.2.1
Site Inspections
3.2.2, 3.3.3, 3.7.1, 3.7.4, 4.2, 9.9.2, 9.4.2, 9.10.1, 13.4
Site Visits, Architect's
3.7.4, 4.2.2, 4.2.9, 9.4.2, 9.5.1, 9.9.2, 9.10.1, 13.4
Special Inspections and Testing
4.2.6, 12.2.1, 13.4
Specifications, Definition of
1.1.6
Specifications
1.1.1, **1.1.6**, 1.2.2, 1.5, 3.12.10, 3.17, 4.2.14
Statute of Limitations
15.1.2, 15.4.1.1
Stopping the Work
2.2.2, 2.4, 9.7, 10.3, 14.1
Stored Materials
6.2.1, 9.3.2, 10.2.1.2, 10.2.4
Subcontractor, Definition of
5.1.1
SUBCONTRACTORS
5
Subcontractors, Work by
1.2.2, 3.3.2, 3.12.1, 3.18, 4.2.3, 5.2.3, 5.3, 5.4, 9.3.1.2, 9.6.7
Subcontractual Relations
5.3, 5.4, 9.3.1.2, 9.6, 9.10, 10.2.1, 14.1, 14.2.1
Submittals
3.10, 3.11, 3.12, 4.2.7, 5.2.1, 5.2.3, 7.3.4, 9.2, 9.3, 9.8, 9.9.1, 9.10.2, 9.10.3
Submittal Schedule
3.10.2, 3.12.5, 4.2.7
Subrogation, Waivers of
6.1.1, **11.3**
Substances, Hazardous
10.3
Substantial Completion
4.2.9, 8.1.1, 8.1.3, 8.2.3, 9.4.2, **9.8**, 9.9.1, 9.10.3, 12.2, 15.1.2
Substantial Completion, Definition of
9.8.1
Substitution of Subcontractors
5.2.3, 5.2.4
Substitution of Architect
2.3.3
Substitutions of Materials
3.4.2, 3.5, 7.3.8
Sub-subcontractor, Definition of
5.1.2
Subsurface Conditions
3.7.4
Successors and Assigns
13.2
Superintendent
3.9, 10.2.6
Supervision and Construction Procedures
1.2.2, **3.3**, 3.4, 3.12.10, 4.2.2, 4.2.7, 6.1.3, 6.2.4, 7.1.3, 7.3.4, 8.2, 8.3.1, 9.4.2, 10, 12, 14, 15.1.4
Suppliers
1.5, 3.12.1, 4.2.4, 4.2.6, 5.2.1, 9.3, 9.4.2, 9.5.4, 9.6, 9.10.5, 14.2.1

AIA Document A201™ – 2017. Copyright © 1911, 1915, 1918, 1925, 1937, 1951, 1958, 1961, 1963, 1966, 1970, 1976, 1987, 1997, 2007 and 2017 by The American Institute of Architects. **All rights reserved. WARNING: This AIA® Document is protected by U.S. Copyright Law and International Treaties. Unauthorized reproduction or distribution of this AIA® Document, or any portion of it, may result in severe civil and criminal penalties, and will be prosecuted to the maximum extent possible under the law.** This draft was produced by AIA software at 17:14:05 ET on 04/14/2020 under Order No.7760153018 which expires on 04/14/2021, and is not for resale.
User Notes: (1295017041)

Surety
5.4.1.2, 9.6.8, 9.8.5, 9.10.2, 9.10.3, 11.1.2, 14.2.2, 15.2.7
Surety, Consent of
9.8.5, 9.10.2, 9.10.3
Surveys
1.1.7, 2.3.4
Suspension by the Owner for Convenience
14.3
Suspension of the Work
3.7.5, 5.4.2, 14.3
Suspension or Termination of the Contract
5.4.1.1, 14
Taxes
3.6, 3.8.2.1, 7.3.4.4
Termination by the Contractor
14.1, 15.1.7
Termination by the Owner for Cause
5.4.1.1, **14.2,** 15.1.7
Termination by the Owner for Convenience
14.4
Termination of the Architect
2.3.3
Termination of the Contractor Employment
14.2.2

TERMINATION OR SUSPENSION OF THE CONTRACT
14
Tests and Inspections
3.1.3, 3.3.3, 3.7.1, 4.2.2, 4.2.6, 4.2.9, 9.4.2, 9.8.3, 9.9.2, 9.10.1, 10.3.2, 12.2.1, **13.4**
TIME
8
Time, Delays and Extensions of
3.2.4, 3.7.4, 5.2.3, 7.2.1, 7.3.1, 7.4, **8.3**, 9.5.1, 9.7, 10.3.2, 10.4, 14.3.2, 15.1.6, 15.2.5
Time Limits
2.1.2, 2.2, 2.5, 3.2.2, 3.10, 3.11, 3.12.5, 3.15.1, 4.2, 5.2, 5.3, 5.4, 6.2.4, 7.3, 7.4, 8.2, 9.2, 9.3.1, 9.3.3, 9.4.1, 9.5, 9.6, 9.7, 9.8, 9.9, 9.10, 12.2, 13.4, 14, 15.1.2, 15.1.3, 15.4
Time Limits on Claims
3.7.4, 10.2.8, 15.1.2, 15.1.3
Title to Work
9.3.2, 9.3.3
UNCOVERING AND CORRECTION OF WORK
12
Uncovering of Work
12.1
Unforeseen Conditions, Concealed or Unknown
3.7.4, 8.3.1, 10.3
Unit Prices
7.3.3.2, 9.1.2
Use of Documents
1.1.1, 1.5, 2.3.6, 3.12.6, 5.3
Use of Site
3.13, 6.1.1, 6.2.1
Values, Schedule of
9.2, 9.3.1
Waiver of Claims by the Architect
13.3.2
Waiver of Claims by the Contractor
9.10.5, 13.3.2, **15.1.7**
Waiver of Claims by the Owner
9.9.3, 9.10.3, 9.10.4, 12.2.2.1, 13.3.2, 14.2.4, **15.1.7**
Waiver of Consequential Damages
14.2.4, 15.1.7
Waiver of Liens
9.3, 9.10.2, 9.10.4
Waivers of Subrogation
6.1.1, **11.3**
Warranty
3.5, 4.2.9, 9.3.3, 9.8.4, 9.9.1, 9.10.2, 9.10.4, 12.2.2, 15.1.2
Weather Delays
8.3, 15.1.6.2
Work, Definition of
1.1.3
Written Consent
1.5.2, 3.4.2, 3.7.4, 3.12.8, 3.14.2, 4.1.2, 9.3.2, 9.10.3, 13.2, 13.3.2, 15.4.4.2
Written Interpretations
4.2.11, 4.2.12
Written Orders
1.1.1, 2.4, 3.9, 7, 8.2.2, 12.1, 12.2, 13.4.2, 14.3.1

AIA Document A201™ – 2017. Copyright © 1911, 1915, 1918, 1925, 1937, 1951, 1958, 1961, 1963, 1966, 1970, 1976, 1987, 1997, 2007 and 2017 by The American Institute of Architects. **All rights reserved. WARNING: This AIA® Document is protected by U.S. Copyright Law and International Treaties. Unauthorized reproduction or distribution of this AIA® Document, or any portion of it, may result in severe civil and criminal penalties, and will be prosecuted to the maximum extent possible under the law.** This draft was produced by AIA software at 17:14:05 ET on 04/14/2020 under Order No.7760153018 which expires on 04/14/2021, and is not for resale.
User Notes: (1295017041)

ARTICLE 1 GENERAL PROVISIONS

§ 1.1 Basic Definitions

§ 1.1.1 The Contract Documents

The Contract Documents are enumerated in the Agreement between the Owner and Contractor (hereinafter the Agreement) and consist of the Agreement, Conditions of the Contract (General, Supplementary and other Conditions), Drawings, Specifications, Addenda issued prior to execution of the Contract, other documents listed in the Agreement, and Modifications issued after execution of the Contract. A Modification is (1) a written amendment to the Contract signed by both parties, (2) a Change Order, (3) a Construction Change Directive, or (4) a written order for a minor change in the Work issued by the Architect. Unless specifically enumerated in the Agreement, the Contract Documents do not include the advertisement or invitation to bid, Instructions to Bidders, sample forms, other information furnished by the Owner in anticipation of receiving bids or proposals, the Contractor's bid or proposal, or portions of Addenda relating to bidding or proposal requirements.

§ 1.1.2 The Contract

The Contract Documents form the Contract for Construction. The Contract represents the entire and integrated agreement between the parties hereto and supersedes prior negotiations, representations, or agreements, either written or oral. The Contract may be amended or modified only by a Modification. The Contract Documents shall not be construed to create a contractual relationship of any kind (1) between the Contractor and the Architect or the Architect's consultants, (2) between the Owner and a Subcontractor or a Sub-subcontractor, (3) between the Owner and the Architect or the Architect's consultants, or (4) between any persons or entities other than the Owner and the Contractor. The Architect shall, however, be entitled to performance and enforcement of obligations under the Contract intended to facilitate performance of the Architect's duties.

§ 1.1.3 The Work

The term "Work" means the construction and services required by the Contract Documents, whether completed or partially completed, and includes all other labor, materials, equipment, and services provided or to be provided by the Contractor to fulfill the Contractor's obligations. The Work may constitute the whole or a part of the Project.

§ 1.1.4 The Project

The Project is the total construction of which the Work performed under the Contract Documents may be the whole or a part and which may include construction by the Owner and by Separate Contractors.

§ 1.1.5 The Drawings

The Drawings are the graphic and pictorial portions of the Contract Documents showing the design, location and dimensions of the Work, generally including plans, elevations, sections, details, schedules, and diagrams.

§ 1.1.6 The Specifications

The Specifications are that portion of the Contract Documents consisting of the written requirements for materials, equipment, systems, standards and workmanship for the Work, and performance of related services.

§ 1.1.7 Instruments of Service

Instruments of Service are representations, in any medium of expression now known or later developed, of the tangible and intangible creative work performed by the Architect and the Architect's consultants under their respective professional services agreements. Instruments of Service may include, without limitation, studies, surveys, models, sketches, drawings, specifications, and other similar materials.

§ 1.1.8 Initial Decision Maker

The Initial Decision Maker is the person identified in the Agreement to render initial decisions on Claims in accordance with Section 15.2. The Initial Decision Maker shall not show partiality to the Owner or Contractor and shall not be liable for results of interpretations or decisions rendered in good faith.

§ 1.2 Correlation and Intent of the Contract Documents

§ 1.2.1 The intent of the Contract Documents is to include all items necessary for the proper execution and completion of the Work by the Contractor. The Contract Documents are complementary, and what is required by one shall be as binding as if required by all; performance by the Contractor shall be required only to the extent consistent with the Contract Documents and reasonably inferable from them as being necessary to produce the indicated results.

AIA Document A201™ – 2017. Copyright © 1911, 1915, 1918, 1925, 1937, 1951, 1958, 1961, 1963, 1966, 1970, 1976, 1987, 1997, 2007 and 2017 by The American Institute of Architects. **All rights reserved. WARNING: This AIA® Document is protected by U.S. Copyright Law and International Treaties. Unauthorized reproduction or distribution of this AIA® Document, or any portion of it, may result in severe civil and criminal penalties, and will be prosecuted to the maximum extent possible under the law.** This draft was produced by AIA software at 17:14:05 ET on 04/14/2020 under Order No.7760153018 which expires on 04/14/2021, and is not for resale.
User Notes: (1295017041)

§ 1.2.1.1 The invalidity of any provision of the Contract Documents shall not invalidate the Contract or its remaining provisions. If it is determined that any provision of the Contract Documents violates any law, or is otherwise invalid or unenforceable, then that provision shall be revised to the extent necessary to make that provision legal and enforceable. In such case the Contract Documents shall be construed, to the fullest extent permitted by law, to give effect to the parties' intentions and purposes in executing the Contract.

§ 1.2.2 Organization of the Specifications into divisions, sections and articles, and arrangement of Drawings shall not control the Contractor in dividing the Work among Subcontractors or in establishing the extent of Work to be performed by any trade.

§ 1.2.3 Unless otherwise stated in the Contract Documents, words that have well-known technical or construction industry meanings are used in the Contract Documents in accordance with such recognized meanings.

§ 1.3 Capitalization

Terms capitalized in these General Conditions include those that are (1) specifically defined, (2) the titles of numbered articles, or (3) the titles of other documents published by the American Institute of Architects.

§ 1.4 Interpretation

In the interest of brevity the Contract Documents frequently omit modifying words such as "all" and "any" and articles such as "the" and "an," but the fact that a modifier or an article is absent from one statement and appears in another is not intended to affect the interpretation of either statement.

§ 1.5 Ownership and Use of Drawings, Specifications, and Other Instruments of Service

§ 1.5.1 The Architect and the Architect's consultants shall be deemed the authors and owners of their respective Instruments of Service, including the Drawings and Specifications, and retain all common law, statutory, and other reserved rights in their Instruments of Service, including copyrights. The Contractor, Subcontractors, Sub-subcontractors, and suppliers shall not own or claim a copyright in the Instruments of Service. Submittal or distribution to meet official regulatory requirements or for other purposes in connection with the Project is not to be construed as publication in derogation of the Architect's or Architect's consultants' reserved rights.

§ 1.5.2 The Contractor, Subcontractors, Sub-subcontractors, and suppliers are authorized to use and reproduce the Instruments of Service provided to them, subject to any protocols established pursuant to Sections 1.7 and 1.8, solely and exclusively for execution of the Work. All copies made under this authorization shall bear the copyright notice, if any, shown on the Instruments of Service. The Contractor, Subcontractors, Sub-subcontractors, and suppliers may not use the Instruments of Service on other projects or for additions to the Project outside the scope of the Work without the specific written consent of the Owner, Architect, and the Architect's consultants.

§ 1.6 Notice

§ 1.6.1 Except as otherwise provided in Section 1.6.2, where the Contract Documents require one party to notify or give notice to the other party, such notice shall be provided in writing to the designated representative of the party to whom the notice is addressed and shall be deemed to have been duly served if delivered in person, by mail, by courier, or by electronic transmission if a method for electronic transmission is set forth in the Agreement.

§ 1.6.2 Notice of Claims as provided in Section 15.1.3 shall be provided in writing and shall be deemed to have been duly served only if delivered to the designated representative of the party to whom the notice is addressed by certified or registered mail, or by courier providing proof of delivery.

§ 1.7 Digital Data Use and Transmission

The parties shall agree upon protocols governing the transmission and use of Instruments of Service or any other information or documentation in digital form. The parties will use AIA Document E203™–2013, Building Information Modeling and Digital Data Exhibit, to establish the protocols for the development, use, transmission, and exchange of digital data.

§ 1.8 Building Information Models Use and Reliance

Any use of, or reliance on, all or a portion of a building information model without agreement to protocols governing the use of, and reliance on, the information contained in the model and without having those protocols set forth in AIA Document E203™–2013, Building Information Modeling and Digital Data Exhibit, and the requisite AIA Document G202™–2013, Project Building Information Modeling Protocol Form, shall be at the using or relying party's sole risk

AIA Document A201™ – 2017. Copyright © 1911, 1915, 1918, 1925, 1937, 1951, 1958, 1961, 1963, 1966, 1970, 1976, 1987, 1997, 2007 and 2017 by The American Institute of Architects. **All rights reserved. WARNING: This AIA® Document is protected by U.S. Copyright Law and International Treaties. Unauthorized reproduction or distribution of this AIA® Document, or any portion of it, may result in severe civil and criminal penalties, and will be prosecuted to the maximum extent possible under the law.** This draft was produced by AIA software at 17:14:05 ET on 04/14/2020 under Order No.7760153018 which expires on 04/14/2021, and is not for resale.
User Notes: (1295017041)

and without liability to the other party and its contractors or consultants, the authors of, or contributors to, the building information model, and each of their agents and employees.

ARTICLE 2 OWNER

§ 2.1 General

§ 2.1.1 The Owner is the person or entity identified as such in the Agreement and is referred to throughout the Contract Documents as if singular in number. The Owner shall designate in writing a representative who shall have express authority to bind the Owner with respect to all matters requiring the Owner's approval or authorization. Except as otherwise provided in Section 4.2.1, the Architect does not have such authority. The term "Owner" means the Owner or the Owner's authorized representative.

§ 2.1.2 The Owner shall furnish to the Contractor, within fifteen days after receipt of a written request, information necessary and relevant for the Contractor to evaluate, give notice of, or enforce mechanic's lien rights. Such information shall include a correct statement of the record legal title to the property on which the Project is located, usually referred to as the site, and the Owner's interest therein.

§ 2.2 Evidence of the Owner's Financial Arrangements

§ 2.2.1 Prior to commencement of the Work and upon written request by the Contractor, the Owner shall furnish to the Contractor reasonable evidence that the Owner has made financial arrangements to fulfill the Owner's obligations under the Contract. The Contractor shall have no obligation to commence the Work until the Owner provides such evidence. If commencement of the Work is delayed under this Section 2.2.1, the Contract Time shall be extended appropriately.

§ 2.2.2 Following commencement of the Work and upon written request by the Contractor, the Owner shall furnish to the Contractor reasonable evidence that the Owner has made financial arrangements to fulfill the Owner's obligations under the Contract only if (1) the Owner fails to make payments to the Contractor as the Contract Documents require; (2) the Contractor identifies in writing a reasonable concern regarding the Owner's ability to make payment when due; or (3) a change in the Work materially changes the Contract Sum. If the Owner fails to provide such evidence, as required, within fourteen days of the Contractor's request, the Contractor may immediately stop the Work and, in that event, shall notify the Owner that the Work has stopped. However, if the request is made because a change in the Work materially changes the Contract Sum under (3) above, the Contractor may immediately stop only that portion of the Work affected by the change until reasonable evidence is provided. If the Work is stopped under this Section 2.2.2, the Contract Time shall be extended appropriately and the Contract Sum shall be increased by the amount of the Contractor's reasonable costs of shutdown, delay and start-up, plus interest as provided in the Contract Documents.

§ 2.2.3 After the Owner furnishes evidence of financial arrangements under this Section 2.2, the Owner shall not materially vary such financial arrangements without prior notice to the Contractor.

§ 2.2.4 Where the Owner has designated information furnished under this Section 2.2 as "confidential," the Contractor shall keep the information confidential and shall not disclose it to any other person. However, the Contractor may disclose "confidential" information, after seven (7) days' notice to the Owner, where disclosure is required by law, including a subpoena or other form of compulsory legal process issued by a court or governmental entity, or by court or arbitrator(s) order. The Contractor may also disclose "confidential" information to its employees, consultants, sureties, Subcontractors and their employees, Sub-subcontractors, and others who need to know the content of such information solely and exclusively for the Project and who agree to maintain the confidentiality of such information.

§ 2.3 Information and Services Required of the Owner

§ 2.3.1 Except for permits and fees that are the responsibility of the Contractor under the Contract Documents, including those required under Section 3.7.1, the Owner shall secure and pay for necessary approvals, easements, assessments and charges required for construction, use or occupancy of permanent structures or for permanent changes in existing facilities.

§ 2.3.2 The Owner shall retain an architect lawfully licensed to practice architecture, or an entity lawfully practicing architecture, in the jurisdiction where the Project is located. That person or entity is identified as the Architect in the Agreement and is referred to throughout the Contract Documents as if singular in number.

§ 2.3.3 If the employment of the Architect terminates, the Owner shall employ a successor to whom the Contractor has no reasonable objection and whose status under the Contract Documents shall be that of the Architect.

AIA Document A201™ – 2017. Copyright © 1911, 1915, 1918, 1925, 1937, 1951, 1958, 1961, 1963, 1966, 1970, 1976, 1987, 1997, 2007 and 2017 by The American Institute of Architects. **All rights reserved. WARNING: This AIA® Document is protected by U.S. Copyright Law and International Treaties. Unauthorized reproduction or distribution of this AIA® Document, or any portion of it, may result in severe civil and criminal penalties, and will be prosecuted to the maximum extent possible under the law.** This draft was produced by AIA software at 17:14:05 ET on 04/14/2020 under Order No.7760153018 which expires on 04/14/2021, and is not for resale.
User Notes: (1295017041)

§ 2.3.4 The Owner shall furnish surveys describing physical characteristics, legal limitations and utility locations for the site of the Project, and a legal description of the site. The Contractor shall be entitled to rely on the accuracy of information furnished by the Owner but shall exercise proper precautions relating to the safe performance of the Work.

§ 2.3.5 The Owner shall furnish information or services required of the Owner by the Contract Documents with reasonable promptness. The Owner shall also furnish any other information or services under the Owner's control and relevant to the Contractor's performance of the Work with reasonable promptness after receiving the Contractor's written request for such information or services.

§ 2.3.6 Unless otherwise provided in the Contract Documents, the Owner shall furnish to the Contractor one copy of the Contract Documents for purposes of making reproductions pursuant to Section 1.5.2.

§ 2.4 Owner's Right to Stop the Work

If the Contractor fails to correct Work that is not in accordance with the requirements of the Contract Documents as required by Section 12.2 or repeatedly fails to carry out Work in accordance with the Contract Documents, the Owner may issue a written order to the Contractor to stop the Work, or any portion thereof, until the cause for such order has been eliminated; however, the right of the Owner to stop the Work shall not give rise to a duty on the part of the Owner to exercise this right for the benefit of the Contractor or any other person or entity, except to the extent required by Section 6.1.3.

§ 2.5 Owner's Right to Carry Out the Work

If the Contractor defaults or neglects to carry out the Work in accordance with the Contract Documents and fails within a ten-day period after receipt of notice from the Owner to commence and continue correction of such default or neglect with diligence and promptness, the Owner may, without prejudice to other remedies the Owner may have, correct such default or neglect. Such action by the Owner and amounts charged to the Contractor are both subject to prior approval of the Architect and the Architect may, pursuant to Section 9.5.1, withhold or nullify a Certificate for Payment in whole or in part, to the extent reasonably necessary to reimburse the Owner for the reasonable cost of correcting such deficiencies, including Owner's expenses and compensation for the Architect's additional services made necessary by such default, neglect, or failure. If current and future payments are not sufficient to cover such amounts, the Contractor shall pay the difference to the Owner. If the Contractor disagrees with the actions of the Owner or the Architect, or the amounts claimed as costs to the Owner, the Contractor may file a Claim pursuant to Article 15.

ARTICLE 3 CONTRACTOR

§ 3.1 General

§ 3.1.1 The Contractor is the person or entity identified as such in the Agreement and is referred to throughout the Contract Documents as if singular in number. The Contractor shall be lawfully licensed, if required in the jurisdiction where the Project is located. The Contractor shall designate in writing a representative who shall have express authority to bind the Contractor with respect to all matters under this Contract. The term "Contractor" means the Contractor or the Contractor's authorized representative.

§ 3.1.2 The Contractor shall perform the Work in accordance with the Contract Documents.

§ 3.1.3 The Contractor shall not be relieved of its obligations to perform the Work in accordance with the Contract Documents either by activities or duties of the Architect in the Architect's administration of the Contract, or by tests, inspections or approvals required or performed by persons or entities other than the Contractor.

§ 3.2 Review of Contract Documents and Field Conditions by Contractor

§ 3.2.1 Execution of the Contract by the Contractor is a representation that the Contractor has visited the site, become generally familiar with local conditions under which the Work is to be performed, and correlated personal observations with requirements of the Contract Documents.

§ 3.2.2 Because the Contract Documents are complementary, the Contractor shall, before starting each portion of the Work, carefully study and compare the various Contract Documents relative to that portion of the Work, as well as the information furnished by the Owner pursuant to Section 2.3.4, shall take field measurements of any existing conditions related to that portion of the Work, and shall observe any conditions at the site affecting it. These

AIA Document A201™ – 2017. Copyright © 1911, 1915, 1918, 1925, 1937, 1951, 1958, 1961, 1963, 1966, 1970, 1976, 1987, 1997, 2007 and 2017 by The American Institute of Architects. **All rights reserved. WARNING: This AIA® Document is protected by U.S. Copyright Law and International Treaties. Unauthorized reproduction or distribution of this AIA® Document, or any portion of it, may result in severe civil and criminal penalties, and will be prosecuted to the maximum extent possible under the law.** This draft was produced by AIA software at 17:14:05 ET on 04/14/2020 under Order No.7760153018 which expires on 04/14/2021, and is not for resale.
User Notes: (1295017041)

obligations are for the purpose of facilitating coordination and construction by the Contractor and are not for the purpose of discovering errors, omissions, or inconsistencies in the Contract Documents; however, the Contractor shall promptly report to the Architect any errors, inconsistencies or omissions discovered by or made known to the Contractor as a request for information in such form as the Architect may require. It is recognized that the Contractor's review is made in the Contractor's capacity as a contractor and not as a licensed design professional, unless otherwise specifically provided in the Contract Documents.

§ 3.2.3 The Contractor is not required to ascertain that the Contract Documents are in accordance with applicable laws, statutes, ordinances, codes, rules and regulations, or lawful orders of public authorities, but the Contractor shall promptly report to the Architect any nonconformity discovered by or made known to the Contractor as a request for information in such form as the Architect may require.

§ 3.2.4 If the Contractor believes that additional cost or time is involved because of clarifications or instructions the Architect issues in response to the Contractor's notices or requests for information pursuant to Sections 3.2.2 or 3.2.3, the Contractor shall submit Claims as provided in Article 15. If the Contractor fails to perform the obligations of Sections 3.2.2 or 3.2.3, the Contractor shall pay such costs and damages to the Owner, subject to Section 15.1.7, as would have been avoided if the Contractor had performed such obligations. If the Contractor performs those obligations, the Contractor shall not be liable to the Owner or Architect for damages resulting from errors, inconsistencies or omissions in the Contract Documents, for differences between field measurements or conditions and the Contract Documents, or for nonconformities of the Contract Documents to applicable laws, statutes, ordinances, codes, rules and regulations, and lawful orders of public authorities.

§ 3.3 Supervision and Construction Procedures

§ 3.3.1 The Contractor shall supervise and direct the Work, using the Contractor's best skill and attention. The Contractor shall be solely responsible for, and have control over, construction means, methods, techniques, sequences, and procedures, and for coordinating all portions of the Work under the Contract. If the Contract Documents give specific instructions concerning construction means, methods, techniques, sequences, or procedures, the Contractor shall evaluate the jobsite safety thereof and shall be solely responsible for the jobsite safety of such means, methods, techniques, sequences, or procedures. If the Contractor determines that such means, methods, techniques, sequences or procedures may not be safe, the Contractor shall give timely notice to the Owner and Architect, and shall propose alternative means, methods, techniques, sequences, or procedures. The Architect shall evaluate the proposed alternative solely for conformance with the design intent for the completed construction. Unless the Architect objects to the Contractor's proposed alternative, the Contractor shall perform the Work using its alternative means, methods, techniques, sequences, or procedures.

§ 3.3.2 The Contractor shall be responsible to the Owner for acts and omissions of the Contractor's employees, Subcontractors and their agents and employees, and other persons or entities performing portions of the Work for, or on behalf of, the Contractor or any of its Subcontractors.

§ 3.3.3 The Contractor shall be responsible for inspection of portions of Work already performed to determine that such portions are in proper condition to receive subsequent Work.

§ 3.4 Labor and Materials

§ 3.4.1 Unless otherwise provided in the Contract Documents, the Contractor shall provide and pay for labor, materials, equipment, tools, construction equipment and machinery, water, heat, utilities, transportation, and other facilities and services necessary for proper execution and completion of the Work, whether temporary or permanent and whether or not incorporated or to be incorporated in the Work.

§ 3.4.2 Except in the case of minor changes in the Work approved by the Architect in accordance with Section 3.12.8 or ordered by the Architect in accordance with Section 7.4, the Contractor may make substitutions only with the consent of the Owner, after evaluation by the Architect and in accordance with a Change Order or Construction Change Directive.

§ 3.4.3 The Contractor shall enforce strict discipline and good order among the Contractor's employees and other persons carrying out the Work. The Contractor shall not permit employment of unfit persons or persons not properly skilled in tasks assigned to them.

AIA Document A201™ – 2017. Copyright © 1911, 1915, 1918, 1925, 1937, 1951, 1958, 1961, 1963, 1966, 1970, 1976, 1987, 1997, 2007 and 2017 by The American Institute of Architects. **All rights reserved. WARNING: This AIA® Document is protected by U.S. Copyright Law and International Treaties. Unauthorized reproduction or distribution of this AIA® Document, or any portion of it, may result in severe civil and criminal penalties, and will be prosecuted to the maximum extent possible under the law.** This draft was produced by AIA software at 17:14:05 ET on 04/14/2020 under Order No.7760153018 which expires on 04/14/2021, and is not for resale.
User Notes: (1295017041)

§ 3.5 Warranty

§ 3.5.1 The Contractor warrants to the Owner and Architect that materials and equipment furnished under the Contract will be of good quality and new unless the Contract Documents require or permit otherwise. The Contractor further warrants that the Work will conform to the requirements of the Contract Documents and will be free from defects, except for those inherent in the quality of the Work the Contract Documents require or permit. Work, materials, or equipment not conforming to these requirements may be considered defective. The Contractor's warranty excludes remedy for damage or defect caused by abuse, alterations to the Work not executed by the Contractor, improper or insufficient maintenance, improper operation, or normal wear and tear and normal usage. If required by the Architect, the Contractor shall furnish satisfactory evidence as to the kind and quality of materials and equipment.

§ 3.5.2 All material, equipment, or other special warranties required by the Contract Documents shall be issued in the name of the Owner, or shall be transferable to the Owner, and shall commence in accordance with Section 9.8.4.

§ 3.6 Taxes

The Contractor shall pay sales, consumer, use and similar taxes for the Work provided by the Contractor that are legally enacted when bids are received or negotiations concluded, whether or not yet effective or merely scheduled to go into effect.

§ 3.7 Permits, Fees, Notices and Compliance with Laws

§ 3.7.1 Unless otherwise provided in the Contract Documents, the Contractor shall secure and pay for the building permit as well as for other permits, fees, licenses, and inspections by government agencies necessary for proper execution and completion of the Work that are customarily secured after execution of the Contract and legally required at the time bids are received or negotiations concluded.

§ 3.7.2 The Contractor shall comply with and give notices required by applicable laws, statutes, ordinances, codes, rules and regulations, and lawful orders of public authorities applicable to performance of the Work.

§ 3.7.3 If the Contractor performs Work knowing it to be contrary to applicable laws, statutes, ordinances, codes, rules and regulations, or lawful orders of public authorities, the Contractor shall assume appropriate responsibility for such Work and shall bear the costs attributable to correction.

§ 3.7.4 Concealed or Unknown Conditions

If the Contractor encounters conditions at the site that are (1) subsurface or otherwise concealed physical conditions that differ materially from those indicated in the Contract Documents or (2) unknown physical conditions of an unusual nature that differ materially from those ordinarily found to exist and generally recognized as inherent in construction activities of the character provided for in the Contract Documents, the Contractor shall promptly provide notice to the Owner and the Architect before conditions are disturbed and in no event later than 14 days after first observance of the conditions. The Architect will promptly investigate such conditions and, if the Architect determines that they differ materially and cause an increase or decrease in the Contractor's cost of, or time required for, performance of any part of the Work, will recommend that an equitable adjustment be made in the Contract Sum or Contract Time, or both. If the Architect determines that the conditions at the site are not materially different from those indicated in the Contract Documents and that no change in the terms of the Contract is justified, the Architect shall promptly notify the Owner and Contractor, stating the reasons. If either party disputes the Architect's determination or recommendation, that party may submit a Claim as provided in Article 15.

§ 3.7.5 If, in the course of the Work, the Contractor encounters human remains or recognizes the existence of burial markers, archaeological sites or wetlands not indicated in the Contract Documents, the Contractor shall immediately suspend any operations that would affect them and shall notify the Owner and Architect. Upon receipt of such notice, the Owner shall promptly take any action necessary to obtain governmental authorization required to resume the operations. The Contractor shall continue to suspend such operations until otherwise instructed by the Owner but shall continue with all other operations that do not affect those remains or features. Requests for adjustments in the Contract Sum and Contract Time arising from the existence of such remains or features may be made as provided in Article 15.

§ 3.8 Allowances

§ 3.8.1 The Contractor shall include in the Contract Sum all allowances stated in the Contract Documents. Items covered by allowances shall be supplied for such amounts and by such persons or entities as the Owner may direct, but the Contractor shall not be required to employ persons or entities to whom the Contractor has reasonable objection.

AIA Document A201™ – 2017. Copyright © 1911, 1915, 1918, 1925, 1937, 1951, 1958, 1961, 1963, 1966, 1970, 1976, 1987, 1997, 2007 and 2017 by The American Institute of Architects. **All rights reserved. WARNING: This AIA® Document is protected by U.S. Copyright Law and International Treaties. Unauthorized reproduction or distribution of this AIA® Document, or any portion of it, may result in severe civil and criminal penalties, and will be prosecuted to the maximum extent possible under the law.** This draft was produced by AIA software at 17:14:05 ET on 04/14/2020 under Order No.7760153018 which expires on 04/14/2021, and is not for resale.
User Notes: (1295017041)

§ 3.8.2 Unless otherwise provided in the Contract Documents,

- **.1** allowances shall cover the cost to the Contractor of materials and equipment delivered at the site and all required taxes, less applicable trade discounts;
- **.2** Contractor's costs for unloading and handling at the site, labor, installation costs, overhead, profit, and other expenses contemplated for stated allowance amounts shall be included in the Contract Sum but not in the allowances; and
- **.3** whenever costs are more than or less than allowances, the Contract Sum shall be adjusted accordingly by Change Order. The amount of the Change Order shall reflect (1) the difference between actual costs and the allowances under Section 3.8.2.1 and (2) changes in Contractor's costs under Section 3.8.2.2.

§ 3.8.3 Materials and equipment under an allowance shall be selected by the Owner with reasonable promptness.

§ 3.9 Superintendent

§ 3.9.1 The Contractor shall employ a competent superintendent and necessary assistants who shall be in attendance at the Project site during performance of the Work. The superintendent shall represent the Contractor, and communications given to the superintendent shall be as binding as if given to the Contractor.

§ 3.9.2 The Contractor, as soon as practicable after award of the Contract, shall notify the Owner and Architect of the name and qualifications of a proposed superintendent. Within 14 days of receipt of the information, the Architect may notify the Contractor, stating whether the Owner or the Architect (1) has reasonable objection to the proposed superintendent or (2) requires additional time for review. Failure of the Architect to provide notice within the 14-day period shall constitute notice of no reasonable objection.

§ 3.9.3 The Contractor shall not employ a proposed superintendent to whom the Owner or Architect has made reasonable and timely objection. The Contractor shall not change the superintendent without the Owner's consent, which shall not unreasonably be withheld or delayed.

§ 3.10 Contractor's Construction and Submittal Schedules

§ 3.10.1 The Contractor, promptly after being awarded the Contract, shall submit for the Owner's and Architect's information a Contractor's construction schedule for the Work. The schedule shall contain detail appropriate for the Project, including (1) the date of commencement of the Work, interim schedule milestone dates, and the date of Substantial Completion; (2) an apportionment of the Work by construction activity; and (3) the time required for completion of each portion of the Work. The schedule shall provide for the orderly progression of the Work to completion and shall not exceed time limits current under the Contract Documents. The schedule shall be revised at appropriate intervals as required by the conditions of the Work and Project.

§ 3.10.2 The Contractor, promptly after being awarded the Contract and thereafter as necessary to maintain a current submittal schedule, shall submit a submittal schedule for the Architect's approval. The Architect's approval shall not be unreasonably delayed or withheld. The submittal schedule shall (1) be coordinated with the Contractor's construction schedule, and (2) allow the Architect reasonable time to review submittals. If the Contractor fails to submit a submittal schedule, or fails to provide submittals in accordance with the approved submittal schedule, the Contractor shall not be entitled to any increase in Contract Sum or extension of Contract Time based on the time required for review of submittals.

§ 3.10.3 The Contractor shall perform the Work in general accordance with the most recent schedules submitted to the Owner and Architect.

§ 3.11 Documents and Samples at the Site

The Contractor shall make available, at the Project site, the Contract Documents, including Change Orders, Construction Change Directives, and other Modifications, in good order and marked currently to indicate field changes and selections made during construction, and the approved Shop Drawings, Product Data, Samples, and similar required submittals. These shall be in electronic form or paper copy, available to the Architect and Owner, and delivered to the Architect for submittal to the Owner upon completion of the Work as a record of the Work as constructed.

AIA Document A201™ – 2017. Copyright © 1911, 1915, 1918, 1925, 1937, 1951, 1958, 1961, 1963, 1966, 1970, 1976, 1987, 1997, 2007 and 2017 by The American Institute of Architects. **All rights reserved. WARNING: This AIA® Document is protected by U.S. Copyright Law and International Treaties. Unauthorized reproduction or distribution of this AIA® Document, or any portion of it, may result in severe civil and criminal penalties, and will be prosecuted to the maximum extent possible under the law.** This draft was produced by AIA software at 17:14:05 ET on 04/14/2020 under Order No.7760153018 which expires on 04/14/2021, and is not for resale.
User Notes: (1295017041)

§ 3.12 Shop Drawings, Product Data and Samples

§ 3.12.1 Shop Drawings are drawings, diagrams, schedules, and other data specially prepared for the Work by the Contractor or a Subcontractor, Sub-subcontractor, manufacturer, supplier, or distributor to illustrate some portion of the Work.

§ 3.12.2 Product Data are illustrations, standard schedules, performance charts, instructions, brochures, diagrams, and other information furnished by the Contractor to illustrate materials or equipment for some portion of the Work.

§ 3.12.3 Samples are physical examples that illustrate materials, equipment, or workmanship, and establish standards by which the Work will be judged.

§ 3.12.4 Shop Drawings, Product Data, Samples, and similar submittals are not Contract Documents. Their purpose is to demonstrate how the Contractor proposes to conform to the information given and the design concept expressed in the Contract Documents for those portions of the Work for which the Contract Documents require submittals. Review by the Architect is subject to the limitations of Section 4.2.7. Informational submittals upon which the Architect is not expected to take responsive action may be so identified in the Contract Documents. Submittals that are not required by the Contract Documents may be returned by the Architect without action.

§ 3.12.5 The Contractor shall review for compliance with the Contract Documents, approve, and submit to the Architect, Shop Drawings, Product Data, Samples, and similar submittals required by the Contract Documents, in accordance with the submittal schedule approved by the Architect or, in the absence of an approved submittal schedule, with reasonable promptness and in such sequence as to cause no delay in the Work or in the activities of the Owner or of Separate Contractors.

§ 3.12.6 By submitting Shop Drawings, Product Data, Samples, and similar submittals, the Contractor represents to the Owner and Architect that the Contractor has (1) reviewed and approved them, (2) determined and verified materials, field measurements and field construction criteria related thereto, or will do so, and (3) checked and coordinated the information contained within such submittals with the requirements of the Work and of the Contract Documents.

§ 3.12.7 The Contractor shall perform no portion of the Work for which the Contract Documents require submittal and review of Shop Drawings, Product Data, Samples, or similar submittals, until the respective submittal has been approved by the Architect.

§ 3.12.8 The Work shall be in accordance with approved submittals except that the Contractor shall not be relieved of responsibility for deviations from the requirements of the Contract Documents by the Architect's approval of Shop Drawings, Product Data, Samples, or similar submittals, unless the Contractor has specifically notified the Architect of such deviation at the time of submittal and (1) the Architect has given written approval to the specific deviation as a minor change in the Work, or (2) a Change Order or Construction Change Directive has been issued authorizing the deviation. The Contractor shall not be relieved of responsibility for errors or omissions in Shop Drawings, Product Data, Samples, or similar submittals, by the Architect's approval thereof.

§ 3.12.9 The Contractor shall direct specific attention, in writing or on resubmitted Shop Drawings, Product Data, Samples, or similar submittals, to revisions other than those requested by the Architect on previous submittals. In the absence of such notice, the Architect's approval of a resubmission shall not apply to such revisions.

§ 3.12.10 The Contractor shall not be required to provide professional services that constitute the practice of architecture or engineering unless such services are specifically required by the Contract Documents for a portion of the Work or unless the Contractor needs to provide such services in order to carry out the Contractor's responsibilities for construction means, methods, techniques, sequences, and procedures. The Contractor shall not be required to provide professional services in violation of applicable law.

§ 3.12.10.1 If professional design services or certifications by a design professional related to systems, materials, or equipment are specifically required of the Contractor by the Contract Documents, the Owner and the Architect will specify all performance and design criteria that such services must satisfy. The Contractor shall be entitled to rely upon the adequacy and accuracy of the performance and design criteria provided in the Contract Documents. The Contractor shall cause such services or certifications to be provided by an appropriately licensed design professional, whose signature and seal shall appear on all drawings, calculations, specifications, certifications, Shop Drawings, and

AIA Document A201™ – 2017. Copyright © 1911, 1915, 1918, 1925, 1937, 1951, 1958, 1961, 1963, 1966, 1970, 1976, 1987, 1997, 2007 and 2017 by The American Institute of Architects. **All rights reserved. WARNING: This AIA® Document is protected by U.S. Copyright Law and International Treaties. Unauthorized reproduction or distribution of this AIA® Document, or any portion of it, may result in severe civil and criminal penalties, and will be prosecuted to the maximum extent possible under the law.** This draft was produced by AIA software at 17:14:05 ET on 04/14/2020 under Order No.7760153018 which expires on 04/14/2021, and is not for resale.
User Notes: (1295017041)

other submittals prepared by such professional. Shop Drawings, and other submittals related to the Work, designed or certified by such professional, if prepared by others, shall bear such professional's written approval when submitted to the Architect. The Owner and the Architect shall be entitled to rely upon the adequacy and accuracy of the services, certifications, and approvals performed or provided by such design professionals, provided the Owner and Architect have specified to the Contractor the performance and design criteria that such services must satisfy. Pursuant to this Section 3.12.10, the Architect will review and approve or take other appropriate action on submittals only for the limited purpose of checking for conformance with information given and the design concept expressed in the Contract Documents.

§ 3.12.10.2 If the Contract Documents require the Contractor's design professional to certify that the Work has been performed in accordance with the design criteria, the Contractor shall furnish such certifications to the Architect at the time and in the form specified by the Architect.

§ 3.13 Use of Site

The Contractor shall confine operations at the site to areas permitted by applicable laws, statutes, ordinances, codes, rules and regulations, lawful orders of public authorities, and the Contract Documents and shall not unreasonably encumber the site with materials or equipment.

§ 3.14 Cutting and Patching

§ 3.14.1 The Contractor shall be responsible for cutting, fitting, or patching required to complete the Work or to make its parts fit together properly. All areas requiring cutting, fitting, or patching shall be restored to the condition existing prior to the cutting, fitting, or patching, unless otherwise required by the Contract Documents.

§ 3.14.2 The Contractor shall not damage or endanger a portion of the Work or fully or partially completed construction of the Owner or Separate Contractors by cutting, patching, or otherwise altering such construction, or by excavation. The Contractor shall not cut or otherwise alter construction by the Owner or a Separate Contractor except with written consent of the Owner and of the Separate Contractor. Consent shall not be unreasonably withheld. The Contractor shall not unreasonably withhold, from the Owner or a Separate Contractor, its consent to cutting or otherwise altering the Work.

§ 3.15 Cleaning Up

§ 3.15.1 The Contractor shall keep the premises and surrounding area free from accumulation of waste materials and rubbish caused by operations under the Contract. At completion of the Work, the Contractor shall remove waste materials, rubbish, the Contractor's tools, construction equipment, machinery, and surplus materials from and about the Project.

§ 3.15.2 If the Contractor fails to clean up as provided in the Contract Documents, the Owner may do so and the Owner shall be entitled to reimbursement from the Contractor.

§ 3.16 Access to Work

The Contractor shall provide the Owner and Architect with access to the Work in preparation and progress wherever located.

§ 3.17 Royalties, Patents and Copyrights

The Contractor shall pay all royalties and license fees. The Contractor shall defend suits or claims for infringement of copyrights and patent rights and shall hold the Owner and Architect harmless from loss on account thereof, but shall not be responsible for defense or loss when a particular design, process, or product of a particular manufacturer or manufacturers is required by the Contract Documents, or where the copyright violations are contained in Drawings, Specifications, or other documents prepared by the Owner or Architect. However, if an infringement of a copyright or patent is discovered by, or made known to, the Contractor, the Contractor shall be responsible for the loss unless the information is promptly furnished to the Architect.

§ 3.18 Indemnification

§ 3.18.1 To the fullest extent permitted by law, the Contractor shall indemnify and hold harmless the Owner, Architect, Architect's consultants, and agents and employees of any of them from and against claims, damages, losses, and expenses, including but not limited to attorneys' fees, arising out of or resulting from performance of the Work, provided that such claim, damage, loss, or expense is attributable to bodily injury, sickness, disease or death, or to injury to or destruction of tangible property (other than the Work itself), but only to the extent caused by the negligent

AIA Document A201™ – 2017. Copyright © 1911, 1915, 1918, 1925, 1937, 1951, 1958, 1961, 1963, 1966, 1970, 1976, 1987, 1997, 2007 and 2017 by The American Institute of Architects. **All rights reserved. WARNING: This AIA® Document is protected by U.S. Copyright Law and International Treaties. Unauthorized reproduction or distribution of this AIA® Document, or any portion of it, may result in severe civil and criminal penalties, and will be prosecuted to the maximum extent possible under the law.** This draft was produced by AIA software at 17:14:05 ET on 04/14/2020 under Order No.7760153018 which expires on 04/14/2021, and is not for resale.
User Notes: (1295017041)

acts or omissions of the Contractor, a Subcontractor, anyone directly or indirectly employed by them, or anyone for whose acts they may be liable, regardless of whether or not such claim, damage, loss, or expense is caused in part by a party indemnified hereunder. Such obligation shall not be construed to negate, abridge, or reduce other rights or obligations of indemnity that would otherwise exist as to a party or person described in this Section 3.18.

§ 3.18.2 In claims against any person or entity indemnified under this Section 3.18 by an employee of the Contractor, a Subcontractor, anyone directly or indirectly employed by them, or anyone for whose acts they may be liable, the indemnification obligation under Section 3.18.1 shall not be limited by a limitation on amount or type of damages, compensation, or benefits payable by or for the Contractor or a Subcontractor under workers' compensation acts, disability benefit acts, or other employee benefit acts.

ARTICLE 4 ARCHITECT

§ 4.1 General

§ 4.1.1 The Architect is the person or entity retained by the Owner pursuant to Section 2.3.2 and identified as such in the Agreement.

§ 4.1.2 Duties, responsibilities, and limitations of authority of the Architect as set forth in the Contract Documents shall not be restricted, modified, or extended without written consent of the Owner, Contractor, and Architect. Consent shall not be unreasonably withheld.

§ 4.2 Administration of the Contract

§ 4.2.1 The Architect will provide administration of the Contract as described in the Contract Documents and will be an Owner's representative during construction until the date the Architect issues the final Certificate for Payment. The Architect will have authority to act on behalf of the Owner only to the extent provided in the Contract Documents.

§ 4.2.2 The Architect will visit the site at intervals appropriate to the stage of construction, or as otherwise agreed with the Owner, to become generally familiar with the progress and quality of the portion of the Work completed, and to determine in general if the Work observed is being performed in a manner indicating that the Work, when fully completed, will be in accordance with the Contract Documents. However, the Architect will not be required to make exhaustive or continuous on-site inspections to check the quality or quantity of the Work. The Architect will not have control over, charge of, or responsibility for the construction means, methods, techniques, sequences or procedures, or for the safety precautions and programs in connection with the Work, since these are solely the Contractor's rights and responsibilities under the Contract Documents.

§ 4.2.3 On the basis of the site visits, the Architect will keep the Owner reasonably informed about the progress and quality of the portion of the Work completed, and promptly report to the Owner (1) known deviations from the Contract Documents, (2) known deviations from the most recent construction schedule submitted by the Contractor, and (3) defects and deficiencies observed in the Work. The Architect will not be responsible for the Contractor's failure to perform the Work in accordance with the requirements of the Contract Documents. The Architect will not have control over or charge of, and will not be responsible for acts or omissions of, the Contractor, Subcontractors, or their agents or employees, or any other persons or entities performing portions of the Work.

§ 4.2.4 Communications

The Owner and Contractor shall include the Architect in all communications that relate to or affect the Architect's services or professional responsibilities. The Owner shall promptly notify the Architect of the substance of any direct communications between the Owner and the Contractor otherwise relating to the Project. Communications by and with the Architect's consultants shall be through the Architect. Communications by and with Subcontractors and suppliers shall be through the Contractor. Communications by and with Separate Contractors shall be through the Owner. The Contract Documents may specify other communication protocols.

§ 4.2.5 Based on the Architect's evaluations of the Contractor's Applications for Payment, the Architect will review and certify the amounts due the Contractor and will issue Certificates for Payment in such amounts.

§ 4.2.6 The Architect has authority to reject Work that does not conform to the Contract Documents. Whenever the Architect considers it necessary or advisable, the Architect will have authority to require inspection or testing of the Work in accordance with Sections 13.4.2 and 13.4.3, whether or not the Work is fabricated, installed or completed. However, neither this authority of the Architect nor a decision made in good faith either to exercise or not to exercise

AIA Document A201™ – 2017. Copyright © 1911, 1915, 1918, 1925, 1937, 1951, 1958, 1961, 1963, 1966, 1970, 1976, 1987, 1997, 2007 and 2017 by The American Institute of Architects. **All rights reserved. WARNING: This AIA® Document is protected by U.S. Copyright Law and International Treaties. Unauthorized reproduction or distribution of this AIA® Document, or any portion of it, may result in severe civil and criminal penalties, and will be prosecuted to the maximum extent possible under the law.** This draft was produced by AIA software at 17:14:05 ET on 04/14/2020 under Order No.7760153018 which expires on 04/14/2021, and is not for resale.
User Notes: (1295017041)

such authority shall give rise to a duty or responsibility of the Architect to the Contractor, Subcontractors, suppliers, their agents or employees, or other persons or entities performing portions of the Work.

§ 4.2.7 The Architect will review and approve, or take other appropriate action upon, the Contractor's submittals such as Shop Drawings, Product Data, and Samples, but only for the limited purpose of checking for conformance with information given and the design concept expressed in the Contract Documents. The Architect's action will be taken in accordance with the submittal schedule approved by the Architect or, in the absence of an approved submittal schedule, with reasonable promptness while allowing sufficient time in the Architect's professional judgment to permit adequate review. Review of such submittals is not conducted for the purpose of determining the accuracy and completeness of other details such as dimensions and quantities, or for substantiating instructions for installation or performance of equipment or systems, all of which remain the responsibility of the Contractor as required by the Contract Documents. The Architect's review of the Contractor's submittals shall not relieve the Contractor of the obligations under Sections 3.3, 3.5, and 3.12. The Architect's review shall not constitute approval of safety precautions or of any construction means, methods, techniques, sequences, or procedures. The Architect's approval of a specific item shall not indicate approval of an assembly of which the item is a component.

§ 4.2.8 The Architect will prepare Change Orders and Construction Change Directives, and may order minor changes in the Work as provided in Section 7.4. The Architect will investigate and make determinations and recommendations regarding concealed and unknown conditions as provided in Section 3.7.4.

§ 4.2.9 The Architect will conduct inspections to determine the date or dates of Substantial Completion and the date of final completion; issue Certificates of Substantial Completion pursuant to Section 9.8; receive and forward to the Owner, for the Owner's review and records, written warranties and related documents required by the Contract and assembled by the Contractor pursuant to Section 9.10; and issue a final Certificate for Payment pursuant to Section 9.10.

§ 4.2.10 If the Owner and Architect agree, the Architect will provide one or more Project representatives to assist in carrying out the Architect's responsibilities at the site. The Owner shall notify the Contractor of any change in the duties, responsibilities and limitations of authority of the Project representatives.

§ 4.2.11 The Architect will interpret and decide matters concerning performance under, and requirements of, the Contract Documents on written request of either the Owner or Contractor. The Architect's response to such requests will be made in writing within any time limits agreed upon or otherwise with reasonable promptness.

§ 4.2.12 Interpretations and decisions of the Architect will be consistent with the intent of, and reasonably inferable from, the Contract Documents and will be in writing or in the form of drawings. When making such interpretations and decisions, the Architect will endeavor to secure faithful performance by both Owner and Contractor, will not show partiality to either, and will not be liable for results of interpretations or decisions rendered in good faith.

§ 4.2.13 The Architect's decisions on matters relating to aesthetic effect will be final if consistent with the intent expressed in the Contract Documents.

§ 4.2.14 The Architect will review and respond to requests for information about the Contract Documents. The Architect's response to such requests will be made in writing within any time limits agreed upon or otherwise with reasonable promptness. If appropriate, the Architect will prepare and issue supplemental Drawings and Specifications in response to the requests for information.

ARTICLE 5 SUBCONTRACTORS

§ 5.1 Definitions

§ 5.1.1 A Subcontractor is a person or entity who has a direct contract with the Contractor to perform a portion of the Work at the site. The term "Subcontractor" is referred to throughout the Contract Documents as if singular in number and means a Subcontractor or an authorized representative of the Subcontractor. The term "Subcontractor" does not include a Separate Contractor or the subcontractors of a Separate Contractor.

§ 5.1.2 A Sub-subcontractor is a person or entity who has a direct or indirect contract with a Subcontractor to perform a portion of the Work at the site. The term "Sub-subcontractor" is referred to throughout the Contract Documents as if singular in number and means a Sub-subcontractor or an authorized representative of the Sub-subcontractor.

AIA Document A201™ – 2017. Copyright © 1911, 1915, 1918, 1925, 1937, 1951, 1958, 1961, 1963, 1966, 1970, 1976, 1987, 1997, 2007 and 2017 by The American Institute of Architects. **All rights reserved. WARNING: This AIA® Document is protected by U.S. Copyright Law and International Treaties. Unauthorized reproduction or distribution of this AIA® Document, or any portion of it, may result in severe civil and criminal penalties, and will be prosecuted to the maximum extent possible under the law.** This draft was produced by AIA software at 17:14:05 ET on 04/14/2020 under Order No.7760153018 which expires on 04/14/2021, and is not for resale.
User Notes: (1295017041)

§ 5.2 Award of Subcontracts and Other Contracts for Portions of the Work

§ 5.2.1 Unless otherwise stated in the Contract Documents, the Contractor, as soon as practicable after award of the Contract, shall notify the Owner and Architect of the persons or entities proposed for each principal portion of the Work, including those who are to furnish materials or equipment fabricated to a special design. Within 14 days of receipt of the information, the Architect may notify the Contractor whether the Owner or the Architect (1) has reasonable objection to any such proposed person or entity or (2) requires additional time for review. Failure of the Architect to provide notice within the 14-day period shall constitute notice of no reasonable objection.

§ 5.2.2 The Contractor shall not contract with a proposed person or entity to whom the Owner or Architect has made reasonable and timely objection. The Contractor shall not be required to contract with anyone to whom the Contractor has made reasonable objection.

§ 5.2.3 If the Owner or Architect has reasonable objection to a person or entity proposed by the Contractor, the Contractor shall propose another to whom the Owner or Architect has no reasonable objection. If the proposed but rejected Subcontractor was reasonably capable of performing the Work, the Contract Sum and Contract Time shall be increased or decreased by the difference, if any, occasioned by such change, and an appropriate Change Order shall be issued before commencement of the substitute Subcontractor's Work. However, no increase in the Contract Sum or Contract Time shall be allowed for such change unless the Contractor has acted promptly and responsively in submitting names as required.

§ 5.2.4 The Contractor shall not substitute a Subcontractor, person, or entity for one previously selected if the Owner or Architect makes reasonable objection to such substitution.

§ 5.3 Subcontractual Relations

By appropriate written agreement, the Contractor shall require each Subcontractor, to the extent of the Work to be performed by the Subcontractor, to be bound to the Contractor by terms of the Contract Documents, and to assume toward the Contractor all the obligations and responsibilities, including the responsibility for safety of the Subcontractor's Work that the Contractor, by these Contract Documents, assumes toward the Owner and Architect. Each subcontract agreement shall preserve and protect the rights of the Owner and Architect under the Contract Documents with respect to the Work to be performed by the Subcontractor so that subcontracting thereof will not prejudice such rights, and shall allow to the Subcontractor, unless specifically provided otherwise in the subcontract agreement, the benefit of all rights, remedies, and redress against the Contractor that the Contractor, by the Contract Documents, has against the Owner. Where appropriate, the Contractor shall require each Subcontractor to enter into similar agreements with Sub-subcontractors. The Contractor shall make available to each proposed Subcontractor, prior to the execution of the subcontract agreement, copies of the Contract Documents to which the Subcontractor will be bound, and, upon written request of the Subcontractor, identify to the Subcontractor terms and conditions of the proposed subcontract agreement that may be at variance with the Contract Documents. Subcontractors will similarly make copies of applicable portions of such documents available to their respective proposed Sub-subcontractors.

§ 5.4 Contingent Assignment of Subcontracts

§ 5.4.1 Each subcontract agreement for a portion of the Work is assigned by the Contractor to the Owner, provided that

- **.1** assignment is effective only after termination of the Contract by the Owner for cause pursuant to Section 14.2 and only for those subcontract agreements that the Owner accepts by notifying the Subcontractor and Contractor; and
- **.2** assignment is subject to the prior rights of the surety, if any, obligated under bond relating to the Contract.

When the Owner accepts the assignment of a subcontract agreement, the Owner assumes the Contractor's rights and obligations under the subcontract.

§ 5.4.2 Upon such assignment, if the Work has been suspended for more than 30 days, the Subcontractor's compensation shall be equitably adjusted for increases in cost resulting from the suspension.

§ 5.4.3 Upon assignment to the Owner under this Section 5.4, the Owner may further assign the subcontract to a successor contractor or other entity. If the Owner assigns the subcontract to a successor contractor or other entity, the Owner shall nevertheless remain legally responsible for all of the successor contractor's obligations under the subcontract.

AIA Document A201™ – 2017. Copyright © 1911, 1915, 1918, 1925, 1937, 1951, 1958, 1961, 1963, 1966, 1970, 1976, 1987, 1997, 2007 and 2017 by The American Institute of Architects. **All rights reserved. WARNING: This AIA® Document is protected by U.S. Copyright Law and International Treaties. Unauthorized reproduction or distribution of this AIA® Document, or any portion of it, may result in severe civil and criminal penalties, and will be prosecuted to the maximum extent possible under the law.** This draft was produced by AIA software at 17:14:05 ET on 04/14/2020 under Order No.7760153018 which expires on 04/14/2021, and is not for resale.
User Notes: (1295017041)

ARTICLE 6 CONSTRUCTION BY OWNER OR BY SEPARATE CONTRACTORS

§ 6.1 Owner's Right to Perform Construction and to Award Separate Contracts

§ 6.1.1 The term "Separate Contractor(s)" shall mean other contractors retained by the Owner under separate agreements. The Owner reserves the right to perform construction or operations related to the Project with the Owner's own forces, and with Separate Contractors retained under Conditions of the Contract substantially similar to those of this Contract, including those provisions of the Conditions of the Contract related to insurance and waiver of subrogation.

§ 6.1.2 When separate contracts are awarded for different portions of the Project or other construction or operations on the site, the term "Contractor" in the Contract Documents in each case shall mean the Contractor who executes each separate Owner-Contractor Agreement.

§ 6.1.3 The Owner shall provide for coordination of the activities of the Owner's own forces and of each Separate Contractor with the Work of the Contractor, who shall cooperate with them. The Contractor shall participate with any Separate Contractors and the Owner in reviewing their construction schedules. The Contractor shall make any revisions to its construction schedule deemed necessary after a joint review and mutual agreement. The construction schedules shall then constitute the schedules to be used by the Contractor, Separate Contractors, and the Owner until subsequently revised.

§ 6.1.4 Unless otherwise provided in the Contract Documents, when the Owner performs construction or operations related to the Project with the Owner's own forces or with Separate Contractors, the Owner or its Separate Contractors shall have the same obligations and rights that the Contractor has under the Conditions of the Contract, including, without excluding others, those stated in Article 3, this Article 6, and Articles 10, 11, and 12.

§ 6.2 Mutual Responsibility

§ 6.2.1 The Contractor shall afford the Owner and Separate Contractors reasonable opportunity for introduction and storage of their materials and equipment and performance of their activities, and shall connect and coordinate the Contractor's construction and operations with theirs as required by the Contract Documents.

§ 6.2.2 If part of the Contractor's Work depends for proper execution or results upon construction or operations by the Owner or a Separate Contractor, the Contractor shall, prior to proceeding with that portion of the Work, promptly notify the Architect of apparent discrepancies or defects in the construction or operations by the Owner or Separate Contractor that would render it unsuitable for proper execution and results of the Contractor's Work. Failure of the Contractor to notify the Architect of apparent discrepancies or defects prior to proceeding with the Work shall constitute an acknowledgment that the Owner's or Separate Contractor's completed or partially completed construction is fit and proper to receive the Contractor's Work. The Contractor shall not be responsible for discrepancies or defects in the construction or operations by the Owner or Separate Contractor that are not apparent.

§ 6.2.3 The Contractor shall reimburse the Owner for costs the Owner incurs that are payable to a Separate Contractor because of the Contractor's delays, improperly timed activities or defective construction. The Owner shall be responsible to the Contractor for costs the Contractor incurs because of a Separate Contractor's delays, improperly timed activities, damage to the Work or defective construction.

§ 6.2.4 The Contractor shall promptly remedy damage that the Contractor wrongfully causes to completed or partially completed construction or to property of the Owner or Separate Contractor as provided in Section 10.2.5.

§ 6.2.5 The Owner and each Separate Contractor shall have the same responsibilities for cutting and patching as are described for the Contractor in Section 3.14.

§ 6.3 Owner's Right to Clean Up

If a dispute arises among the Contractor, Separate Contractors, and the Owner as to the responsibility under their respective contracts for maintaining the premises and surrounding area free from waste materials and rubbish, the Owner may clean up and the Architect will allocate the cost among those responsible.

AIA Document A201™ – 2017. Copyright © 1911, 1915, 1918, 1925, 1937, 1951, 1958, 1961, 1963, 1966, 1970, 1976, 1987, 1997, 2007 and 2017 by The American Institute of Architects. **All rights reserved. WARNING: This AIA® Document is protected by U.S. Copyright Law and International Treaties. Unauthorized reproduction or distribution of this AIA® Document, or any portion of it, may result in severe civil and criminal penalties, and will be prosecuted to the maximum extent possible under the law.** This draft was produced by AIA software at 17:14:05 ET on 04/14/2020 under Order No.7760153018 which expires on 04/14/2021, and is not for resale.
User Notes: (1295017041)

ARTICLE 7 CHANGES IN THE WORK

§ 7.1 General

§ 7.1.1 Changes in the Work may be accomplished after execution of the Contract, and without invalidating the Contract, by Change Order, Construction Change Directive or order for a minor change in the Work, subject to the limitations stated in this Article 7 and elsewhere in the Contract Documents.

§ 7.1.2 A Change Order shall be based upon agreement among the Owner, Contractor, and Architect. A Construction Change Directive requires agreement by the Owner and Architect and may or may not be agreed to by the Contractor. An order for a minor change in the Work may be issued by the Architect alone.

§ 7.1.3 Changes in the Work shall be performed under applicable provisions of the Contract Documents. The Contractor shall proceed promptly with changes in the Work, unless otherwise provided in the Change Order, Construction Change Directive, or order for a minor change in the Work.

§ 7.2 Change Orders

§ 7.2.1 A Change Order is a written instrument prepared by the Architect and signed by the Owner, Contractor, and Architect stating their agreement upon all of the following:

- **.1** The change in the Work;
- **.2** The amount of the adjustment, if any, in the Contract Sum; and
- **.3** The extent of the adjustment, if any, in the Contract Time.

§ 7.3 Construction Change Directives

§ 7.3.1 A Construction Change Directive is a written order prepared by the Architect and signed by the Owner and Architect, directing a change in the Work prior to agreement on adjustment, if any, in the Contract Sum or Contract Time, or both. The Owner may by Construction Change Directive, without invalidating the Contract, order changes in the Work within the general scope of the Contract consisting of additions, deletions, or other revisions, the Contract Sum and Contract Time being adjusted accordingly.

§ 7.3.2 A Construction Change Directive shall be used in the absence of total agreement on the terms of a Change Order.

§ 7.3.3 If the Construction Change Directive provides for an adjustment to the Contract Sum, the adjustment shall be based on one of the following methods:

- **.1** Mutual acceptance of a lump sum properly itemized and supported by sufficient substantiating data to permit evaluation;
- **.2** Unit prices stated in the Contract Documents or subsequently agreed upon;
- **.3** Cost to be determined in a manner agreed upon by the parties and a mutually acceptable fixed or percentage fee; or
- **.4** As provided in Section 7.3.4.

§ 7.3.4 If the Contractor does not respond promptly or disagrees with the method for adjustment in the Contract Sum, the Architect shall determine the adjustment on the basis of reasonable expenditures and savings of those performing the Work attributable to the change, including, in case of an increase in the Contract Sum, an amount for overhead and profit as set forth in the Agreement, or if no such amount is set forth in the Agreement, a reasonable amount. In such case, and also under Section 7.3.3.3, the Contractor shall keep and present, in such form as the Architect may prescribe, an itemized accounting together with appropriate supporting data. Unless otherwise provided in the Contract Documents, costs for the purposes of this Section 7.3.4 shall be limited to the following:

- **.1** Costs of labor, including applicable payroll taxes, fringe benefits required by agreement or custom, workers' compensation insurance, and other employee costs approved by the Architect;
- **.2** Costs of materials, supplies, and equipment, including cost of transportation, whether incorporated or consumed;
- **.3** Rental costs of machinery and equipment, exclusive of hand tools, whether rented from the Contractor or others;
- **.4** Costs of premiums for all bonds and insurance, permit fees, and sales, use, or similar taxes, directly related to the change; and
- **.5** Costs of supervision and field office personnel directly attributable to the change.

AIA Document A201™ – 2017. Copyright © 1911, 1915, 1918, 1925, 1937, 1951, 1958, 1961, 1963, 1966, 1970, 1976, 1987, 1997, 2007 and 2017 by The American Institute of Architects. **All rights reserved. WARNING: This AIA® Document is protected by U.S. Copyright Law and International Treaties. Unauthorized reproduction or distribution of this AIA® Document, or any portion of it, may result in severe civil and criminal penalties, and will be prosecuted to the maximum extent possible under the law.** This draft was produced by AIA software at 17:14:05 ET on 04/14/2020 under Order No.7760153018 which expires on 04/14/2021, and is not for resale.
User Notes: (1295017041)

§ 7.3.5 If the Contractor disagrees with the adjustment in the Contract Time, the Contractor may make a Claim in accordance with applicable provisions of Article 15.

§ 7.3.6 Upon receipt of a Construction Change Directive, the Contractor shall promptly proceed with the change in the Work involved and advise the Architect of the Contractor's agreement or disagreement with the method, if any, provided in the Construction Change Directive for determining the proposed adjustment in the Contract Sum or Contract Time.

§ 7.3.7 A Construction Change Directive signed by the Contractor indicates the Contractor's agreement therewith, including adjustment in Contract Sum and Contract Time or the method for determining them. Such agreement shall be effective immediately and shall be recorded as a Change Order.

§ 7.3.8 The amount of credit to be allowed by the Contractor to the Owner for a deletion or change that results in a net decrease in the Contract Sum shall be actual net cost as confirmed by the Architect. When both additions and credits covering related Work or substitutions are involved in a change, the allowance for overhead and profit shall be figured on the basis of net increase, if any, with respect to that change.

§ 7.3.9 Pending final determination of the total cost of a Construction Change Directive to the Owner, the Contractor may request payment for Work completed under the Construction Change Directive in Applications for Payment. The Architect will make an interim determination for purposes of monthly certification for payment for those costs and certify for payment the amount that the Architect determines, in the Architect's professional judgment, to be reasonably justified. The Architect's interim determination of cost shall adjust the Contract Sum on the same basis as a Change Order, subject to the right of either party to disagree and assert a Claim in accordance with Article 15.

§ 7.3.10 When the Owner and Contractor agree with a determination made by the Architect concerning the adjustments in the Contract Sum and Contract Time, or otherwise reach agreement upon the adjustments, such agreement shall be effective immediately and the Architect will prepare a Change Order. Change Orders may be issued for all or any part of a Construction Change Directive.

§ 7.4 Minor Changes in the Work

The Architect may order minor changes in the Work that are consistent with the intent of the Contract Documents and do not involve an adjustment in the Contract Sum or an extension of the Contract Time. The Architect's order for minor changes shall be in writing. If the Contractor believes that the proposed minor change in the Work will affect the Contract Sum or Contract Time, the Contractor shall notify the Architect and shall not proceed to implement the change in the Work. If the Contractor performs the Work set forth in the Architect's order for a minor change without prior notice to the Architect that such change will affect the Contract Sum or Contract Time, the Contractor waives any adjustment to the Contract Sum or extension of the Contract Time.

ARTICLE 8 TIME

§ 8.1 Definitions

§ 8.1.1 Unless otherwise provided, Contract Time is the period of time, including authorized adjustments, allotted in the Contract Documents for Substantial Completion of the Work.

§ 8.1.2 The date of commencement of the Work is the date established in the Agreement.

§ 8.1.3 The date of Substantial Completion is the date certified by the Architect in accordance with Section 9.8.

§ 8.1.4 The term "day" as used in the Contract Documents shall mean calendar day unless otherwise specifically defined.

§ 8.2 Progress and Completion

§ 8.2.1 Time limits stated in the Contract Documents are of the essence of the Contract. By executing the Agreement, the Contractor confirms that the Contract Time is a reasonable period for performing the Work.

§ 8.2.2 The Contractor shall not knowingly, except by agreement or instruction of the Owner in writing, commence the Work prior to the effective date of insurance required to be furnished by the Contractor and Owner.

AIA Document A201™ – 2017. Copyright © 1911, 1915, 1918, 1925, 1937, 1951, 1958, 1961, 1963, 1966, 1970, 1976, 1987, 1997, 2007 and 2017 by The American Institute of Architects. **All rights reserved. WARNING: This AIA® Document is protected by U.S. Copyright Law and International Treaties. Unauthorized reproduction or distribution of this AIA® Document, or any portion of it, may result in severe civil and criminal penalties, and will be prosecuted to the maximum extent possible under the law.** This draft was produced by AIA software at 17:14:05 ET on 04/14/2020 under Order No.7760153018 which expires on 04/14/2021, and is not for resale.
User Notes: (1295017041)

§ 8.2.3 The Contractor shall proceed expeditiously with adequate forces and shall achieve Substantial Completion within the Contract Time.

§ 8.3 Delays and Extensions of Time

§ 8.3.1 If the Contractor is delayed at any time in the commencement or progress of the Work by (1) an act or neglect of the Owner or Architect, of an employee of either, or of a Separate Contractor; (2) by changes ordered in the Work; (3) by labor disputes, fire, unusual delay in deliveries, unavoidable casualties, adverse weather conditions documented in accordance with Section 15.1.6.2, or other causes beyond the Contractor's control; (4) by delay authorized by the Owner pending mediation and binding dispute resolution; or (5) by other causes that the Contractor asserts, and the Architect determines, justify delay, then the Contract Time shall be extended for such reasonable time as the Architect may determine.

§ 8.3.2 Claims relating to time shall be made in accordance with applicable provisions of Article 15.

§ 8.3.3 This Section 8.3 does not preclude recovery of damages for delay by either party under other provisions of the Contract Documents.

ARTICLE 9 PAYMENTS AND COMPLETION

§ 9.1 Contract Sum

§ 9.1.1 The Contract Sum is stated in the Agreement and, including authorized adjustments, is the total amount payable by the Owner to the Contractor for performance of the Work under the Contract Documents.

§ 9.1.2 If unit prices are stated in the Contract Documents or subsequently agreed upon, and if quantities originally contemplated are materially changed so that application of such unit prices to the actual quantities causes substantial inequity to the Owner or Contractor, the applicable unit prices shall be equitably adjusted.

§ 9.2 Schedule of Values

Where the Contract is based on a stipulated sum or Guaranteed Maximum Price, the Contractor shall submit a schedule of values to the Architect before the first Application for Payment, allocating the entire Contract Sum to the various portions of the Work. The schedule of values shall be prepared in the form, and supported by the data to substantiate its accuracy, required by the Architect. This schedule, unless objected to by the Architect, shall be used as a basis for reviewing the Contractor's Applications for Payment. Any changes to the schedule of values shall be submitted to the Architect and supported by such data to substantiate its accuracy as the Architect may require, and unless objected to by the Architect, shall be used as a basis for reviewing the Contractor's subsequent Applications for Payment.

§ 9.3 Applications for Payment

§ 9.3.1 At least ten days before the date established for each progress payment, the Contractor shall submit to the Architect an itemized Application for Payment prepared in accordance with the schedule of values, if required under Section 9.2, for completed portions of the Work. The application shall be notarized, if required, and supported by all data substantiating the Contractor's right to payment that the Owner or Architect require, such as copies of requisitions, and releases and waivers of liens from Subcontractors and suppliers, and shall reflect retainage if provided for in the Contract Documents.

§ 9.3.1.1 As provided in Section 7.3.9, such applications may include requests for payment on account of changes in the Work that have been properly authorized by Construction Change Directives, or by interim determinations of the Architect, but not yet included in Change Orders.

§ 9.3.1.2 Applications for Payment shall not include requests for payment for portions of the Work for which the Contractor does not intend to pay a Subcontractor or supplier, unless such Work has been performed by others whom the Contractor intends to pay.

§ 9.3.2 Unless otherwise provided in the Contract Documents, payments shall be made on account of materials and equipment delivered and suitably stored at the site for subsequent incorporation in the Work. If approved in advance by the Owner, payment may similarly be made for materials and equipment suitably stored off the site at a location agreed upon in writing. Payment for materials and equipment stored on or off the site shall be conditioned upon compliance by the Contractor with procedures satisfactory to the Owner to establish the Owner's title to such materials

AIA Document A201™ – 2017. Copyright © 1911, 1915, 1918, 1925, 1937, 1951, 1958, 1961, 1963, 1966, 1970, 1976, 1987, 1997, 2007 and 2017 by The American Institute of Architects. **All rights reserved. WARNING: This AIA® Document is protected by U.S. Copyright Law and International Treaties. Unauthorized reproduction or distribution of this AIA® Document, or any portion of it, may result in severe civil and criminal penalties, and will be prosecuted to the maximum extent possible under the law.** This draft was produced by AIA software at 17:14:05 ET on 04/14/2020 under Order No.7760153018 which expires on 04/14/2021, and is not for resale.
User Notes: (1295017041)

and equipment or otherwise protect the Owner's interest, and shall include the costs of applicable insurance, storage, and transportation to the site, for such materials and equipment stored off the site.

§ 9.3.3 The Contractor warrants that title to all Work covered by an Application for Payment will pass to the Owner no later than the time of payment. The Contractor further warrants that upon submittal of an Application for Payment all Work for which Certificates for Payment have been previously issued and payments received from the Owner shall, to the best of the Contractor's knowledge, information, and belief, be free and clear of liens, claims, security interests, or encumbrances, in favor of the Contractor, Subcontractors, suppliers, or other persons or entities that provided labor, materials, and equipment relating to the Work.

§ 9.4 Certificates for Payment

§ 9.4.1 The Architect will, within seven days after receipt of the Contractor's Application for Payment, either (1) issue to the Owner a Certificate for Payment in the full amount of the Application for Payment, with a copy to the Contractor; or (2) issue to the Owner a Certificate for Payment for such amount as the Architect determines is properly due, and notify the Contractor and Owner of the Architect's reasons for withholding certification in part as provided in Section 9.5.1; or (3) withhold certification of the entire Application for Payment, and notify the Contractor and Owner of the Architect's reason for withholding certification in whole as provided in Section 9.5.1.

§ 9.4.2 The issuance of a Certificate for Payment will constitute a representation by the Architect to the Owner, based on the Architect's evaluation of the Work and the data in the Application for Payment, that, to the best of the Architect's knowledge, information, and belief, the Work has progressed to the point indicated, the quality of the Work is in accordance with the Contract Documents, and that the Contractor is entitled to payment in the amount certified. The foregoing representations are subject to an evaluation of the Work for conformance with the Contract Documents upon Substantial Completion, to results of subsequent tests and inspections, to correction of minor deviations from the Contract Documents prior to completion, and to specific qualifications expressed by the Architect. However, the issuance of a Certificate for Payment will not be a representation that the Architect has (1) made exhaustive or continuous on-site inspections to check the quality or quantity of the Work; (2) reviewed construction means, methods, techniques, sequences, or procedures; (3) reviewed copies of requisitions received from Subcontractors and suppliers and other data requested by the Owner to substantiate the Contractor's right to payment; or (4) made examination to ascertain how or for what purpose the Contractor has used money previously paid on account of the Contract Sum.

§ 9.5 Decisions to Withhold Certification

§ 9.5.1 The Architect may withhold a Certificate for Payment in whole or in part, to the extent reasonably necessary to protect the Owner, if in the Architect's opinion the representations to the Owner required by Section 9.4.2 cannot be made. If the Architect is unable to certify payment in the amount of the Application, the Architect will notify the Contractor and Owner as provided in Section 9.4.1. If the Contractor and Architect cannot agree on a revised amount, the Architect will promptly issue a Certificate for Payment for the amount for which the Architect is able to make such representations to the Owner. The Architect may also withhold a Certificate for Payment or, because of subsequently discovered evidence, may nullify the whole or a part of a Certificate for Payment previously issued, to such extent as may be necessary in the Architect's opinion to protect the Owner from loss for which the Contractor is responsible, including loss resulting from acts and omissions described in Section 3.3.2, because of

- **.1** defective Work not remedied;
- **.2** third party claims filed or reasonable evidence indicating probable filing of such claims, unless security acceptable to the Owner is provided by the Contractor;
- **.3** failure of the Contractor to make payments properly to Subcontractors or suppliers for labor, materials or equipment;
- **.4** reasonable evidence that the Work cannot be completed for the unpaid balance of the Contract Sum;
- **.5** damage to the Owner or a Separate Contractor;
- **.6** reasonable evidence that the Work will not be completed within the Contract Time, and that the unpaid balance would not be adequate to cover actual or liquidated damages for the anticipated delay; or
- **.7** repeated failure to carry out the Work in accordance with the Contract Documents.

§ 9.5.2 When either party disputes the Architect's decision regarding a Certificate for Payment under Section 9.5.1, in whole or in part, that party may submit a Claim in accordance with Article 15.

§ 9.5.3 When the reasons for withholding certification are removed, certification will be made for amounts previously withheld.

AIA Document A201™ – 2017. Copyright © 1911, 1915, 1918, 1925, 1937, 1951, 1958, 1961, 1963, 1966, 1970, 1976, 1987, 1997, 2007 and 2017 by The American Institute of Architects. **All rights reserved. WARNING: This AIA® Document is protected by U.S. Copyright Law and International Treaties. Unauthorized reproduction or distribution of this AIA® Document, or any portion of it, may result in severe civil and criminal penalties, and will be prosecuted to the maximum extent possible under the law.** This draft was produced by AIA software at 17:14:05 ET on 04/14/2020 under Order No.7760153018 which expires on 04/14/2021, and is not for resale.
User Notes: (1295017041)

§ 9.5.4 If the Architect withholds certification for payment under Section 9.5.1.3, the Owner may, at its sole option, issue joint checks to the Contractor and to any Subcontractor or supplier to whom the Contractor failed to make payment for Work properly performed or material or equipment suitably delivered. If the Owner makes payments by joint check, the Owner shall notify the Architect and the Contractor shall reflect such payment on its next Application for Payment.

§ 9.6 Progress Payments

§ 9.6.1 After the Architect has issued a Certificate for Payment, the Owner shall make payment in the manner and within the time provided in the Contract Documents, and shall so notify the Architect.

§ 9.6.2 The Contractor shall pay each Subcontractor, no later than seven days after receipt of payment from the Owner, the amount to which the Subcontractor is entitled, reflecting percentages actually retained from payments to the Contractor on account of the Subcontractor's portion of the Work. The Contractor shall, by appropriate agreement with each Subcontractor, require each Subcontractor to make payments to Sub-subcontractors in a similar manner.

§ 9.6.3 The Architect will, on request, furnish to a Subcontractor, if practicable, information regarding percentages of completion or amounts applied for by the Contractor and action taken thereon by the Architect and Owner on account of portions of the Work done by such Subcontractor.

§ 9.6.4 The Owner has the right to request written evidence from the Contractor that the Contractor has properly paid Subcontractors and suppliers amounts paid by the Owner to the Contractor for subcontracted Work. If the Contractor fails to furnish such evidence within seven days, the Owner shall have the right to contact Subcontractors and suppliers to ascertain whether they have been properly paid. Neither the Owner nor Architect shall have an obligation to pay, or to see to the payment of money to, a Subcontractor or supplier, except as may otherwise be required by law.

§ 9.6.5 The Contractor's payments to suppliers shall be treated in a manner similar to that provided in Sections 9.6.2, 9.6.3 and 9.6.4.

§ 9.6.6 A Certificate for Payment, a progress payment, or partial or entire use or occupancy of the Project by the Owner shall not constitute acceptance of Work not in accordance with the Contract Documents.

§ 9.6.7 Unless the Contractor provides the Owner with a payment bond in the full penal sum of the Contract Sum, payments received by the Contractor for Work properly performed by Subcontractors or provided by suppliers shall be held by the Contractor for those Subcontractors or suppliers who performed Work or furnished materials, or both, under contract with the Contractor for which payment was made by the Owner. Nothing contained herein shall require money to be placed in a separate account and not commingled with money of the Contractor, create any fiduciary liability or tort liability on the part of the Contractor for breach of trust, or entitle any person or entity to an award of punitive damages against the Contractor for breach of the requirements of this provision.

§ 9.6.8 Provided the Owner has fulfilled its payment obligations under the Contract Documents, the Contractor shall defend and indemnify the Owner from all loss, liability, damage or expense, including reasonable attorney's fees and litigation expenses, arising out of any lien claim or other claim for payment by any Subcontractor or supplier of any tier. Upon receipt of notice of a lien claim or other claim for payment, the Owner shall notify the Contractor. If approved by the applicable court, when required, the Contractor may substitute a surety bond for the property against which the lien or other claim for payment has been asserted.

§ 9.7 Failure of Payment

If the Architect does not issue a Certificate for Payment, through no fault of the Contractor, within seven days after receipt of the Contractor's Application for Payment, or if the Owner does not pay the Contractor within seven days after the date established in the Contract Documents, the amount certified by the Architect or awarded by binding dispute resolution, then the Contractor may, upon seven additional days' notice to the Owner and Architect, stop the Work until payment of the amount owing has been received. The Contract Time shall be extended appropriately and the Contract Sum shall be increased by the amount of the Contractor's reasonable costs of shutdown, delay and start-up, plus interest as provided for in the Contract Documents.

AIA Document A201™ – 2017. Copyright © 1911, 1915, 1918, 1925, 1937, 1951, 1958, 1961, 1963, 1966, 1970, 1976, 1987, 1997, 2007 and 2017 by The American Institute of Architects. **All rights reserved. WARNING: This AIA® Document is protected by U.S. Copyright Law and International Treaties. Unauthorized reproduction or distribution of this AIA® Document, or any portion of it, may result in severe civil and criminal penalties, and will be prosecuted to the maximum extent possible under the law.** This draft was produced by AIA software at 17:14:05 ET on 04/14/2020 under Order No.7760153018 which expires on 04/14/2021, and is not for resale.
User Notes: (1295017041)

§ 9.8 Substantial Completion

§ 9.8.1 Substantial Completion is the stage in the progress of the Work when the Work or designated portion thereof is sufficiently complete in accordance with the Contract Documents so that the Owner can occupy or utilize the Work for its intended use.

§ 9.8.2 When the Contractor considers that the Work, or a portion thereof which the Owner agrees to accept separately, is substantially complete, the Contractor shall prepare and submit to the Architect a comprehensive list of items to be completed or corrected prior to final payment. Failure to include an item on such list does not alter the responsibility of the Contractor to complete all Work in accordance with the Contract Documents.

§ 9.8.3 Upon receipt of the Contractor's list, the Architect will make an inspection to determine whether the Work or designated portion thereof is substantially complete. If the Architect's inspection discloses any item, whether or not included on the Contractor's list, which is not sufficiently complete in accordance with the Contract Documents so that the Owner can occupy or utilize the Work or designated portion thereof for its intended use, the Contractor shall, before issuance of the Certificate of Substantial Completion, complete or correct such item upon notification by the Architect. In such case, the Contractor shall then submit a request for another inspection by the Architect to determine Substantial Completion.

§ 9.8.4 When the Work or designated portion thereof is substantially complete, the Architect will prepare a Certificate of Substantial Completion that shall establish the date of Substantial Completion; establish responsibilities of the Owner and Contractor for security, maintenance, heat, utilities, damage to the Work and insurance; and fix the time within which the Contractor shall finish all items on the list accompanying the Certificate. Warranties required by the Contract Documents shall commence on the date of Substantial Completion of the Work or designated portion thereof unless otherwise provided in the Certificate of Substantial Completion.

§ 9.8.5 The Certificate of Substantial Completion shall be submitted to the Owner and Contractor for their written acceptance of responsibilities assigned to them in the Certificate. Upon such acceptance, and consent of surety if any, the Owner shall make payment of retainage applying to the Work or designated portion thereof. Such payment shall be adjusted for Work that is incomplete or not in accordance with the requirements of the Contract Documents.

§ 9.9 Partial Occupancy or Use

§ 9.9.1 The Owner may occupy or use any completed or partially completed portion of the Work at any stage when such portion is designated by separate agreement with the Contractor, provided such occupancy or use is consented to by the insurer and authorized by public authorities having jurisdiction over the Project. Such partial occupancy or use may commence whether or not the portion is substantially complete, provided the Owner and Contractor have accepted in writing the responsibilities assigned to each of them for payments, retainage, if any, security, maintenance, heat, utilities, damage to the Work and insurance, and have agreed in writing concerning the period for correction of the Work and commencement of warranties required by the Contract Documents. When the Contractor considers a portion substantially complete, the Contractor shall prepare and submit a list to the Architect as provided under Section 9.8.2. Consent of the Contractor to partial occupancy or use shall not be unreasonably withheld. The stage of the progress of the Work shall be determined by written agreement between the Owner and Contractor or, if no agreement is reached, by decision of the Architect.

§ 9.9.2 Immediately prior to such partial occupancy or use, the Owner, Contractor, and Architect shall jointly inspect the area to be occupied or portion of the Work to be used in order to determine and record the condition of the Work.

§ 9.9.3 Unless otherwise agreed upon, partial occupancy or use of a portion or portions of the Work shall not constitute acceptance of Work not complying with the requirements of the Contract Documents.

§ 9.10 Final Completion and Final Payment

§ 9.10.1 Upon receipt of the Contractor's notice that the Work is ready for final inspection and acceptance and upon receipt of a final Application for Payment, the Architect will promptly make such inspection. When the Architect finds the Work acceptable under the Contract Documents and the Contract fully performed, the Architect will promptly issue a final Certificate for Payment stating that to the best of the Architect's knowledge, information and belief, and on the basis of the Architect's on-site visits and inspections, the Work has been completed in accordance with the Contract Documents and that the entire balance found to be due the Contractor and noted in the final Certificate is due and payable. The Architect's final Certificate for Payment will constitute a further representation that conditions listed in Section 9.10.2 as precedent to the Contractor's being entitled to final payment have been fulfilled.

AIA Document A201™ – 2017. Copyright © 1911, 1915, 1918, 1925, 1937, 1951, 1958, 1961, 1963, 1966, 1970, 1976, 1987, 1997, 2007 and 2017 by The American Institute of Architects. **All rights reserved. WARNING: This AIA® Document is protected by U.S. Copyright Law and International Treaties. Unauthorized reproduction or distribution of this AIA® Document, or any portion of it, may result in severe civil and criminal penalties, and will be prosecuted to the maximum extent possible under the law.** This draft was produced by AIA software at 17:14:05 ET on 04/14/2020 under Order No.7760153018 which expires on 04/14/2021, and is not for resale.
User Notes: (1295017041)

§ 9.10.2 Neither final payment nor any remaining retained percentage shall become due until the Contractor submits to the Architect (1) an affidavit that payrolls, bills for materials and equipment, and other indebtedness connected with the Work for which the Owner or the Owner's property might be responsible or encumbered (less amounts withheld by Owner) have been paid or otherwise satisfied, (2) a certificate evidencing that insurance required by the Contract Documents to remain in force after final payment is currently in effect, (3) a written statement that the Contractor knows of no reason that the insurance will not be renewable to cover the period required by the Contract Documents, (4) consent of surety, if any, to final payment, (5) documentation of any special warranties, such as manufacturers' warranties or specific Subcontractor warranties, and (6) if required by the Owner, other data establishing payment or satisfaction of obligations, such as receipts and releases and waivers of liens, claims, security interests, or encumbrances arising out of the Contract, to the extent and in such form as may be designated by the Owner. If a Subcontractor refuses to furnish a release or waiver required by the Owner, the Contractor may furnish a bond satisfactory to the Owner to indemnify the Owner against such lien, claim, security interest, or encumbrance. If a lien, claim, security interest, or encumbrance remains unsatisfied after payments are made, the Contractor shall refund to the Owner all money that the Owner may be compelled to pay in discharging the lien, claim, security interest, or encumbrance, including all costs and reasonable attorneys' fees.

§ 9.10.3 If, after Substantial Completion of the Work, final completion thereof is materially delayed through no fault of the Contractor or by issuance of Change Orders affecting final completion, and the Architect so confirms, the Owner shall, upon application by the Contractor and certification by the Architect, and without terminating the Contract, make payment of the balance due for that portion of the Work fully completed, corrected, and accepted. If the remaining balance for Work not fully completed or corrected is less than retainage stipulated in the Contract Documents, and if bonds have been furnished, the written consent of the surety to payment of the balance due for that portion of the Work fully completed and accepted shall be submitted by the Contractor to the Architect prior to certification of such payment. Such payment shall be made under terms and conditions governing final payment, except that it shall not constitute a waiver of Claims.

§ 9.10.4 The making of final payment shall constitute a waiver of Claims by the Owner except those arising from

- **.1** liens, Claims, security interests, or encumbrances arising out of the Contract and unsettled;
- **.2** failure of the Work to comply with the requirements of the Contract Documents;
- **.3** terms of special warranties required by the Contract Documents; or
- **.4** audits performed by the Owner, if permitted by the Contract Documents, after final payment.

§ 9.10.5 Acceptance of final payment by the Contractor, a Subcontractor, or a supplier, shall constitute a waiver of claims by that payee except those previously made in writing and identified by that payee as unsettled at the time of final Application for Payment.

ARTICLE 10 PROTECTION OF PERSONS AND PROPERTY

§ 10.1 Safety Precautions and Programs

The Contractor shall be responsible for initiating, maintaining, and supervising all safety precautions and programs in connection with the performance of the Contract.

§ 10.2 Safety of Persons and Property

§ 10.2.1 The Contractor shall take reasonable precautions for safety of, and shall provide reasonable protection to prevent damage, injury, or loss to

- **.1** employees on the Work and other persons who may be affected thereby;
- **.2** the Work and materials and equipment to be incorporated therein, whether in storage on or off the site, under care, custody, or control of the Contractor, a Subcontractor, or a Sub-subcontractor; and
- **.3** other property at the site or adjacent thereto, such as trees, shrubs, lawns, walks, pavements, roadways, structures, and utilities not designated for removal, relocation, or replacement in the course of construction.

§ 10.2.2 The Contractor shall comply with, and give notices required by applicable laws, statutes, ordinances, codes, rules and regulations, and lawful orders of public authorities, bearing on safety of persons or property or their protection from damage, injury, or loss.

§ 10.2.3 The Contractor shall implement, erect, and maintain, as required by existing conditions and performance of the Contract, reasonable safeguards for safety and protection, including posting danger signs and other warnings

AIA Document A201™ – 2017. Copyright © 1911, 1915, 1918, 1925, 1937, 1951, 1958, 1961, 1963, 1966, 1970, 1976, 1987, 1997, 2007 and 2017 by The American Institute of Architects. **All rights reserved. WARNING: This AIA® Document is protected by U.S. Copyright Law and International Treaties. Unauthorized reproduction or distribution of this AIA® Document, or any portion of it, may result in severe civil and criminal penalties, and will be prosecuted to the maximum extent possible under the law.** This draft was produced by AIA software at 17:14:05 ET on 04/14/2020 under Order No.7760153018 which expires on 04/14/2021, and is not for resale.
User Notes: (1295017041)

against hazards; promulgating safety regulations; and notifying the owners and users of adjacent sites and utilities of the safeguards.

§ 10.2.4 When use or storage of explosives or other hazardous materials or equipment, or unusual methods are necessary for execution of the Work, the Contractor shall exercise utmost care and carry on such activities under supervision of properly qualified personnel.

§ 10.2.5 The Contractor shall promptly remedy damage and loss (other than damage or loss insured under property insurance required by the Contract Documents) to property referred to in Sections 10.2.1.2 and 10.2.1.3 caused in whole or in part by the Contractor, a Subcontractor, a Sub-subcontractor, or anyone directly or indirectly employed by any of them, or by anyone for whose acts they may be liable and for which the Contractor is responsible under Sections 10.2.1.2 and 10.2.1.3. The Contractor may make a Claim for the cost to remedy the damage or loss to the extent such damage or loss is attributable to acts or omissions of the Owner or Architect or anyone directly or indirectly employed by either of them, or by anyone for whose acts either of them may be liable, and not attributable to the fault or negligence of the Contractor. The foregoing obligations of the Contractor are in addition to the Contractor's obligations under Section 3.18.

§ 10.2.6 The Contractor shall designate a responsible member of the Contractor's organization at the site whose duty shall be the prevention of accidents. This person shall be the Contractor's superintendent unless otherwise designated by the Contractor in writing to the Owner and Architect.

§ 10.2.7 The Contractor shall not permit any part of the construction or site to be loaded so as to cause damage or create an unsafe condition.

§ 10.2.8 Injury or Damage to Person or Property

If either party suffers injury or damage to person or property because of an act or omission of the other party, or of others for whose acts such party is legally responsible, notice of the injury or damage, whether or not insured, shall be given to the other party within a reasonable time not exceeding 21 days after discovery. The notice shall provide sufficient detail to enable the other party to investigate the matter.

§ 10.3 Hazardous Materials and Substances

§ 10.3.1 The Contractor is responsible for compliance with any requirements included in the Contract Documents regarding hazardous materials or substances. If the Contractor encounters a hazardous material or substance not addressed in the Contract Documents and if reasonable precautions will be inadequate to prevent foreseeable bodily injury or death to persons resulting from a material or substance, including but not limited to asbestos or polychlorinated biphenyl (PCB), encountered on the site by the Contractor, the Contractor shall, upon recognizing the condition, immediately stop Work in the affected area and notify the Owner and Architect of the condition.

§ 10.3.2 Upon receipt of the Contractor's notice, the Owner shall obtain the services of a licensed laboratory to verify the presence or absence of the material or substance reported by the Contractor and, in the event such material or substance is found to be present, to cause it to be rendered harmless. Unless otherwise required by the Contract Documents, the Owner shall furnish in writing to the Contractor and Architect the names and qualifications of persons or entities who are to perform tests verifying the presence or absence of the material or substance or who are to perform the task of removal or safe containment of the material or substance. The Contractor and the Architect will promptly reply to the Owner in writing stating whether or not either has reasonable objection to the persons or entities proposed by the Owner. If either the Contractor or Architect has an objection to a person or entity proposed by the Owner, the Owner shall propose another to whom the Contractor and the Architect have no reasonable objection. When the material or substance has been rendered harmless, Work in the affected area shall resume upon written agreement of the Owner and Contractor. By Change Order, the Contract Time shall be extended appropriately and the Contract Sum shall be increased by the amount of the Contractor's reasonable additional costs of shutdown, delay, and start-up.

§ 10.3.3 To the fullest extent permitted by law, the Owner shall indemnify and hold harmless the Contractor, Subcontractors, Architect, Architect's consultants, and agents and employees of any of them from and against claims, damages, losses, and expenses, including but not limited to attorneys' fees, arising out of or resulting from performance of the Work in the affected area if in fact the material or substance presents the risk of bodily injury or death as described in Section 10.3.1 and has not been rendered harmless, provided that such claim, damage, loss, or expense is attributable to bodily injury, sickness, disease or death, or to injury to or destruction of tangible property

AIA Document A201™ – 2017. Copyright © 1911, 1915, 1918, 1925, 1937, 1951, 1958, 1961, 1963, 1966, 1970, 1976, 1987, 1997, 2007 and 2017 by The American Institute of Architects. **All rights reserved. WARNING: This AIA® Document is protected by U.S. Copyright Law and International Treaties. Unauthorized reproduction or distribution of this AIA® Document, or any portion of it, may result in severe civil and criminal penalties, and will be prosecuted to the maximum extent possible under the law.** This draft was produced by AIA software at 17:14:05 ET on 04/14/2020 under Order No.7760153018 which expires on 04/14/2021, and is not for resale.
User Notes: (1295017041)

(other than the Work itself), except to the extent that such damage, loss, or expense is due to the fault or negligence of the party seeking indemnity.

§ 10.3.4 The Owner shall not be responsible under this Section 10.3 for hazardous materials or substances the Contractor brings to the site unless such materials or substances are required by the Contract Documents. The Owner shall be responsible for hazardous materials or substances required by the Contract Documents, except to the extent of the Contractor's fault or negligence in the use and handling of such materials or substances.

§ 10.3.5 The Contractor shall reimburse the Owner for the cost and expense the Owner incurs (1) for remediation of hazardous materials or substances the Contractor brings to the site and negligently handles, or (2) where the Contractor fails to perform its obligations under Section 10.3.1, except to the extent that the cost and expense are due to the Owner's fault or negligence.

§ 10.3.6 If, without negligence on the part of the Contractor, the Contractor is held liable by a government agency for the cost of remediation of a hazardous material or substance solely by reason of performing Work as required by the Contract Documents, the Owner shall reimburse the Contractor for all cost and expense thereby incurred.

§ 10.4 Emergencies

In an emergency affecting safety of persons or property, the Contractor shall act, at the Contractor's discretion, to prevent threatened damage, injury, or loss. Additional compensation or extension of time claimed by the Contractor on account of an emergency shall be determined as provided in Article 15 and Article 7.

ARTICLE 11 INSURANCE AND BONDS

§ 11.1 Contractor's Insurance and Bonds

§ 11.1.1 The Contractor shall purchase and maintain insurance of the types and limits of liability, containing the endorsements, and subject to the terms and conditions, as described in the Agreement or elsewhere in the Contract Documents. The Contractor shall purchase and maintain the required insurance from an insurance company or insurance companies lawfully authorized to issue insurance in the jurisdiction where the Project is located. The Owner, Architect, and Architect's consultants shall be named as additional insureds under the Contractor's commercial general liability policy or as otherwise described in the Contract Documents.

§ 11.1.2 The Contractor shall provide surety bonds of the types, for such penal sums, and subject to such terms and conditions as required by the Contract Documents. The Contractor shall purchase and maintain the required bonds from a company or companies lawfully authorized to issue surety bonds in the jurisdiction where the Project is located.

§ 11.1.3 Upon the request of any person or entity appearing to be a potential beneficiary of bonds covering payment of obligations arising under the Contract, the Contractor shall promptly furnish a copy of the bonds or shall authorize a copy to be furnished.

§ 11.1.4 Notice of Cancellation or Expiration of Contractor's Required Insurance. Within three (3) business days of the date the Contractor becomes aware of an impending or actual cancellation or expiration of any insurance required by the Contract Documents, the Contractor shall provide notice to the Owner of such impending or actual cancellation or expiration. Upon receipt of notice from the Contractor, the Owner shall, unless the lapse in coverage arises from an act or omission of the Owner, have the right to stop the Work until the lapse in coverage has been cured by the procurement of replacement coverage by the Contractor. The furnishing of notice by the Contractor shall not relieve the Contractor of any contractual obligation to provide any required coverage.

§ 11.2 Owner's Insurance

§ 11.2.1 The Owner shall purchase and maintain insurance of the types and limits of liability, containing the endorsements, and subject to the terms and conditions, as described in the Agreement or elsewhere in the Contract Documents. The Owner shall purchase and maintain the required insurance from an insurance company or insurance companies lawfully authorized to issue insurance in the jurisdiction where the Project is located.

§ 11.2.2 Failure to Purchase Required Property Insurance. If the Owner fails to purchase and maintain the required property insurance, with all of the coverages and in the amounts described in the Agreement or elsewhere in the Contract Documents, the Owner shall inform the Contractor in writing prior to commencement of the Work. Upon receipt of notice from the Owner, the Contractor may delay commencement of the Work and may obtain insurance that will protect the interests of the Contractor, Subcontractors, and Sub-Subcontractors in the Work. When the failure to

AIA Document A201™ – 2017. Copyright © 1911, 1915, 1918, 1925, 1937, 1951, 1958, 1961, 1963, 1966, 1970, 1976, 1987, 1997, 2007 and 2017 by The American Institute of Architects. **All rights reserved. WARNING: This AIA® Document is protected by U.S. Copyright Law and International Treaties. Unauthorized reproduction or distribution of this AIA® Document, or any portion of it, may result in severe civil and criminal penalties, and will be prosecuted to the maximum extent possible under the law.** This draft was produced by AIA software at 17:14:05 ET on 04/14/2020 under Order No.7760153018 which expires on 04/14/2021, and is not for resale.
User Notes: (1295017041)

provide coverage has been cured or resolved, the Contract Sum and Contract Time shall be equitably adjusted. In the event the Owner fails to procure coverage, the Owner waives all rights against the Contractor, Subcontractors, and Sub-subcontractors to the extent the loss to the Owner would have been covered by the insurance to have been procured by the Owner. The cost of the insurance shall be charged to the Owner by a Change Order. If the Owner does not provide written notice, and the Contractor is damaged by the failure or neglect of the Owner to purchase or maintain the required insurance, the Owner shall reimburse the Contractor for all reasonable costs and damages attributable thereto.

§ 11.2.3 Notice of Cancellation or Expiration of Owner's Required Property Insurance. Within three (3) business days of the date the Owner becomes aware of an impending or actual cancellation or expiration of any property insurance required by the Contract Documents, the Owner shall provide notice to the Contractor of such impending or actual cancellation or expiration. Unless the lapse in coverage arises from an act or omission of the Contractor: (1) the Contractor, upon receipt of notice from the Owner, shall have the right to stop the Work until the lapse in coverage has been cured by the procurement of replacement coverage by either the Owner or the Contractor; (2) the Contract Time and Contract Sum shall be equitably adjusted; and (3) the Owner waives all rights against the Contractor, Subcontractors, and Sub-subcontractors to the extent any loss to the Owner would have been covered by the insurance had it not expired or been cancelled. If the Contractor purchases replacement coverage, the cost of the insurance shall be charged to the Owner by an appropriate Change Order. The furnishing of notice by the Owner shall not relieve the Owner of any contractual obligation to provide required insurance.

§ 11.3 Waivers of Subrogation

§ 11.3.1 The Owner and Contractor waive all rights against (1) each other and any of their subcontractors, sub-subcontractors, agents, and employees, each of the other; (2) the Architect and Architect's consultants; and (3) Separate Contractors, if any, and any of their subcontractors, sub-subcontractors, agents, and employees, for damages caused by fire, or other causes of loss, to the extent those losses are covered by property insurance required by the Agreement or other property insurance applicable to the Project, except such rights as they have to proceeds of such insurance. The Owner or Contractor, as appropriate, shall require similar written waivers in favor of the individuals and entities identified above from the Architect, Architect's consultants, Separate Contractors, subcontractors, and sub-subcontractors. The policies of insurance purchased and maintained by each person or entity agreeing to waive claims pursuant to this section 11.3.1 shall not prohibit this waiver of subrogation. This waiver of subrogation shall be effective as to a person or entity (1) even though that person or entity would otherwise have a duty of indemnification, contractual or otherwise, (2) even though that person or entity did not pay the insurance premium directly or indirectly, or (3) whether or not the person or entity had an insurable interest in the damaged property.

§ 11.3.2 If during the Project construction period the Owner insures properties, real or personal or both, at or adjacent to the site by property insurance under policies separate from those insuring the Project, or if after final payment property insurance is to be provided on the completed Project through a policy or policies other than those insuring the Project during the construction period, to the extent permissible by such policies, the Owner waives all rights in accordance with the terms of Section 11.3.1 for damages caused by fire or other causes of loss covered by this separate property insurance.

§ 11.4 Loss of Use, Business Interruption, and Delay in Completion Insurance

The Owner, at the Owner's option, may purchase and maintain insurance that will protect the Owner against loss of use of the Owner's property, or the inability to conduct normal operations, due to fire or other causes of loss. The Owner waives all rights of action against the Contractor and Architect for loss of use of the Owner's property, due to fire or other hazards however caused.

§11.5 Adjustment and Settlement of Insured Loss

§ 11.5.1 A loss insured under the property insurance required by the Agreement shall be adjusted by the Owner as fiduciary and made payable to the Owner as fiduciary for the insureds, as their interests may appear, subject to requirements of any applicable mortgagee clause and of Section 11.5.2. The Owner shall pay the Architect and Contractor their just shares of insurance proceeds received by the Owner, and by appropriate agreements the Architect and Contractor shall make payments to their consultants and Subcontractors in similar manner.

§ 11.5.2 Prior to settlement of an insured loss, the Owner shall notify the Contractor of the terms of the proposed settlement as well as the proposed allocation of the insurance proceeds. The Contractor shall have 14 days from receipt of notice to object to the proposed settlement or allocation of the proceeds. If the Contractor does not object, the Owner shall settle the loss and the Contractor shall be bound by the settlement and allocation. Upon receipt, the Owner

AIA Document A201™ – 2017. Copyright © 1911, 1915, 1918, 1925, 1937, 1951, 1958, 1961, 1963, 1966, 1970, 1976, 1987, 1997, 2007 and 2017 by The American Institute of Architects. **All rights reserved. WARNING: This AIA® Document is protected by U.S. Copyright Law and International Treaties. Unauthorized reproduction or distribution of this AIA® Document, or any portion of it, may result in severe civil and criminal penalties, and will be prosecuted to the maximum extent possible under the law.** This draft was produced by AIA software at 17:14:05 ET on 04/14/2020 under Order No.7760153018 which expires on 04/14/2021, and is not for resale.
User Notes: (1295017041)

shall deposit the insurance proceeds in a separate account and make the appropriate distributions. Thereafter, if no other agreement is made or the Owner does not terminate the Contract for convenience, the Owner and Contractor shall execute a Change Order for reconstruction of the damaged or destroyed Work in the amount allocated for that purpose. If the Contractor timely objects to either the terms of the proposed settlement or the allocation of the proceeds, the Owner may proceed to settle the insured loss, and any dispute between the Owner and Contractor arising out of the settlement or allocation of the proceeds shall be resolved pursuant to Article 15. Pending resolution of any dispute, the Owner may issue a Construction Change Directive for the reconstruction of the damaged or destroyed Work.

ARTICLE 12 UNCOVERING AND CORRECTION OF WORK

§ 12.1 Uncovering of Work

§ 12.1.1 If a portion of the Work is covered contrary to the Architect's request or to requirements specifically expressed in the Contract Documents, it must, if requested in writing by the Architect, be uncovered for the Architect's examination and be replaced at the Contractor's expense without change in the Contract Time.

§ 12.1.2 If a portion of the Work has been covered that the Architect has not specifically requested to examine prior to its being covered, the Architect may request to see such Work and it shall be uncovered by the Contractor. If such Work is in accordance with the Contract Documents, the Contractor shall be entitled to an equitable adjustment to the Contract Sum and Contract Time as may be appropriate. If such Work is not in accordance with the Contract Documents, the costs of uncovering the Work, and the cost of correction, shall be at the Contractor's expense.

§ 12.2 Correction of Work

§ 12.2.1 Before Substantial Completion

The Contractor shall promptly correct Work rejected by the Architect or failing to conform to the requirements of the Contract Documents, discovered before Substantial Completion and whether or not fabricated, installed or completed. Costs of correcting such rejected Work, including additional testing and inspections, the cost of uncovering and replacement, and compensation for the Architect's services and expenses made necessary thereby, shall be at the Contractor's expense.

§ 12.2.2 After Substantial Completion

§ 12.2.2.1 In addition to the Contractor's obligations under Section 3.5, if, within one year after the date of Substantial Completion of the Work or designated portion thereof or after the date for commencement of warranties established under Section 9.9.1, or by terms of any applicable special warranty required by the Contract Documents, any of the Work is found to be not in accordance with the requirements of the Contract Documents, the Contractor shall correct it promptly after receipt of notice from the Owner to do so, unless the Owner has previously given the Contractor a written acceptance of such condition. The Owner shall give such notice promptly after discovery of the condition. During the one-year period for correction of Work, if the Owner fails to notify the Contractor and give the Contractor an opportunity to make the correction, the Owner waives the rights to require correction by the Contractor and to make a claim for breach of warranty. If the Contractor fails to correct nonconforming Work within a reasonable time during that period after receipt of notice from the Owner or Architect, the Owner may correct it in accordance with Section 2.5.

§ 12.2.2.2 The one-year period for correction of Work shall be extended with respect to portions of Work first performed after Substantial Completion by the period of time between Substantial Completion and the actual completion of that portion of the Work.

§ 12.2.2.3 The one-year period for correction of Work shall not be extended by corrective Work performed by the Contractor pursuant to this Section 12.2.

§ 12.2.3 The Contractor shall remove from the site portions of the Work that are not in accordance with the requirements of the Contract Documents and are neither corrected by the Contractor nor accepted by the Owner.

§ 12.2.4 The Contractor shall bear the cost of correcting destroyed or damaged construction of the Owner or Separate Contractors, whether completed or partially completed, caused by the Contractor's correction or removal of Work that is not in accordance with the requirements of the Contract Documents.

§ 12.2.5 Nothing contained in this Section 12.2 shall be construed to establish a period of limitation with respect to other obligations the Contractor has under the Contract Documents. Establishment of the one-year period for

AIA Document A201™ – 2017. Copyright © 1911, 1915, 1918, 1925, 1937, 1951, 1958, 1961, 1963, 1966, 1970, 1976, 1987, 1997, 2007 and 2017 by The American Institute of Architects. **All rights reserved. WARNING: This AIA® Document is protected by U.S. Copyright Law and International Treaties. Unauthorized reproduction or distribution of this AIA® Document, or any portion of it, may result in severe civil and criminal penalties, and will be prosecuted to the maximum extent possible under the law.** This draft was produced by AIA software at 17:14:05 ET on 04/14/2020 under Order No.7760153018 which expires on 04/14/2021, and is not for resale.
User Notes: (1295017041)

correction of Work as described in Section 12.2.2 relates only to the specific obligation of the Contractor to correct the Work, and has no relationship to the time within which the obligation to comply with the Contract Documents may be sought to be enforced, nor to the time within which proceedings may be commenced to establish the Contractor's liability with respect to the Contractor's obligations other than specifically to correct the Work.

§ 12.3 Acceptance of Nonconforming Work

If the Owner prefers to accept Work that is not in accordance with the requirements of the Contract Documents, the Owner may do so instead of requiring its removal and correction, in which case the Contract Sum will be reduced as appropriate and equitable. Such adjustment shall be effected whether or not final payment has been made.

ARTICLE 13 MISCELLANEOUS PROVISIONS

§ 13.1 Governing Law

The Contract shall be governed by the law of the place where the Project is located, excluding that jurisdiction's choice of law rules. If the parties have selected arbitration as the method of binding dispute resolution, the Federal Arbitration Act shall govern Section 15.4.

§ 13.2 Successors and Assigns

§ 13.2.1 The Owner and Contractor respectively bind themselves, their partners, successors, assigns, and legal representatives to covenants, agreements, and obligations contained in the Contract Documents. Except as provided in Section 13.2.2, neither party to the Contract shall assign the Contract as a whole without written consent of the other. If either party attempts to make an assignment without such consent, that party shall nevertheless remain legally responsible for all obligations under the Contract.

§ 13.2.2 The Owner may, without consent of the Contractor, assign the Contract to a lender providing construction financing for the Project, if the lender assumes the Owner's rights and obligations under the Contract Documents. The Contractor shall execute all consents reasonably required to facilitate the assignment.

§ 13.3 Rights and Remedies

§ 13.3.1 Duties and obligations imposed by the Contract Documents and rights and remedies available thereunder shall be in addition to and not a limitation of duties, obligations, rights, and remedies otherwise imposed or available by law.

§ 13.3.2 No action or failure to act by the Owner, Architect, or Contractor shall constitute a waiver of a right or duty afforded them under the Contract, nor shall such action or failure to act constitute approval of or acquiescence in a breach thereunder, except as may be specifically agreed upon in writing.

§ 13.4 Tests and Inspections

§ 13.4.1 Tests, inspections, and approvals of portions of the Work shall be made as required by the Contract Documents and by applicable laws, statutes, ordinances, codes, rules, and regulations or lawful orders of public authorities. Unless otherwise provided, the Contractor shall make arrangements for such tests, inspections, and approvals with an independent testing laboratory or entity acceptable to the Owner, or with the appropriate public authority, and shall bear all related costs of tests, inspections, and approvals. The Contractor shall give the Architect timely notice of when and where tests and inspections are to be made so that the Architect may be present for such procedures. The Owner shall bear costs of tests, inspections, or approvals that do not become requirements until after bids are received or negotiations concluded. The Owner shall directly arrange and pay for tests, inspections, or approvals where building codes or applicable laws or regulations so require.

§ 13.4.2 If the Architect, Owner, or public authorities having jurisdiction determine that portions of the Work require additional testing, inspection, or approval not included under Section 13.4.1, the Architect will, upon written authorization from the Owner, instruct the Contractor to make arrangements for such additional testing, inspection, or approval, by an entity acceptable to the Owner, and the Contractor shall give timely notice to the Architect of when and where tests and inspections are to be made so that the Architect may be present for such procedures. Such costs, except as provided in Section 13.4.3, shall be at the Owner's expense.

§ 13.4.3 If procedures for testing, inspection, or approval under Sections 13.4.1 and 13.4.2 reveal failure of the portions of the Work to comply with requirements established by the Contract Documents, all costs made necessary by such failure, including those of repeated procedures and compensation for the Architect's services and expenses, shall be at the Contractor's expense.

AIA Document A201™ – 2017. Copyright © 1911, 1915, 1918, 1925, 1937, 1951, 1958, 1961, 1963, 1966, 1970, 1976, 1987, 1997, 2007 and 2017 by The American Institute of Architects. **All rights reserved. WARNING: This AIA® Document is protected by U.S. Copyright Law and International Treaties. Unauthorized reproduction or distribution of this AIA® Document, or any portion of it, may result in severe civil and criminal penalties, and will be prosecuted to the maximum extent possible under the law.** This draft was produced by AIA software at 17:14:05 ET on 04/14/2020 under Order No.7760153018 which expires on 04/14/2021, and is not for resale.
User Notes: (1295017041)

§ 13.4.4 Required certificates of testing, inspection, or approval shall, unless otherwise required by the Contract Documents, be secured by the Contractor and promptly delivered to the Architect.

§ 13.4.5 If the Architect is to observe tests, inspections, or approvals required by the Contract Documents, the Architect will do so promptly and, where practicable, at the normal place of testing.

§ 13.4.6 Tests or inspections conducted pursuant to the Contract Documents shall be made promptly to avoid unreasonable delay in the Work.

§ 13.5 Interest

Payments due and unpaid under the Contract Documents shall bear interest from the date payment is due at the rate the parties agree upon in writing or, in the absence thereof, at the legal rate prevailing from time to time at the place where the Project is located.

ARTICLE 14 TERMINATION OR SUSPENSION OF THE CONTRACT

§ 14.1 Termination by the Contractor

§ 14.1.1 The Contractor may terminate the Contract if the Work is stopped for a period of 30 consecutive days through no act or fault of the Contractor, a Subcontractor, a Sub-subcontractor, their agents or employees, or any other persons or entities performing portions of the Work, for any of the following reasons:

- **.1** Issuance of an order of a court or other public authority having jurisdiction that requires all Work to be stopped;
- **.2** An act of government, such as a declaration of national emergency, that requires all Work to be stopped;
- **.3** Because the Architect has not issued a Certificate for Payment and has not notified the Contractor of the reason for withholding certification as provided in Section 9.4.1, or because the Owner has not made payment on a Certificate for Payment within the time stated in the Contract Documents; or
- **.4** The Owner has failed to furnish to the Contractor reasonable evidence as required by Section 2.2.

§ 14.1.2 The Contractor may terminate the Contract if, through no act or fault of the Contractor, a Subcontractor, a Sub-subcontractor, their agents or employees, or any other persons or entities performing portions of the Work, repeated suspensions, delays, or interruptions of the entire Work by the Owner as described in Section 14.3, constitute in the aggregate more than 100 percent of the total number of days scheduled for completion, or 120 days in any 365-day period, whichever is less.

§ 14.1.3 If one of the reasons described in Section 14.1.1 or 14.1.2 exists, the Contractor may, upon seven days' notice to the Owner and Architect, terminate the Contract and recover from the Owner payment for Work executed, as well as reasonable overhead and profit on Work not executed, and costs incurred by reason of such termination.

§ 14.1.4 If the Work is stopped for a period of 60 consecutive days through no act or fault of the Contractor, a Subcontractor, a Sub-subcontractor, or their agents or employees or any other persons or entities performing portions of the Work because the Owner has repeatedly failed to fulfill the Owner's obligations under the Contract Documents with respect to matters important to the progress of the Work, the Contractor may, upon seven additional days' notice to the Owner and the Architect, terminate the Contract and recover from the Owner as provided in Section 14.1.3.

§ 14.2 Termination by the Owner for Cause

§ 14.2.1 The Owner may terminate the Contract if the Contractor

- **.1** repeatedly refuses or fails to supply enough properly skilled workers or proper materials;
- **.2** fails to make payment to Subcontractors or suppliers in accordance with the respective agreements between the Contractor and the Subcontractors or suppliers;
- **.3** repeatedly disregards applicable laws, statutes, ordinances, codes, rules and regulations, or lawful orders of a public authority; or
- **.4** otherwise is guilty of substantial breach of a provision of the Contract Documents.

§ 14.2.2 When any of the reasons described in Section 14.2.1 exist, and upon certification by the Architect that sufficient cause exists to justify such action, the Owner may, without prejudice to any other rights or remedies of the Owner and after giving the Contractor and the Contractor's surety, if any, seven days' notice, terminate employment of the Contractor and may, subject to any prior rights of the surety:

AIA Document A201™ – 2017. Copyright © 1911, 1915, 1918, 1925, 1937, 1951, 1958, 1961, 1963, 1966, 1970, 1976, 1987, 1997, 2007 and 2017 by The American Institute of Architects. **All rights reserved. WARNING: This AIA® Document is protected by U.S. Copyright Law and International Treaties. Unauthorized reproduction or distribution of this AIA® Document, or any portion of it, may result in severe civil and criminal penalties, and will be prosecuted to the maximum extent possible under the law.** This draft was produced by AIA software at 17:14:05 ET on 04/14/2020 under Order No.7760153018 which expires on 04/14/2021, and is not for resale.
User Notes: (1295017041)

.1 Exclude the Contractor from the site and take possession of all materials, equipment, tools, and construction equipment and machinery thereon owned by the Contractor;
.2 Accept assignment of subcontracts pursuant to Section 5.4; and
.3 Finish the Work by whatever reasonable method the Owner may deem expedient. Upon written request of the Contractor, the Owner shall furnish to the Contractor a detailed accounting of the costs incurred by the Owner in finishing the Work.

§ 14.2.3 When the Owner terminates the Contract for one of the reasons stated in Section 14.2.1, the Contractor shall not be entitled to receive further payment until the Work is finished.

§ 14.2.4 If the unpaid balance of the Contract Sum exceeds costs of finishing the Work, including compensation for the Architect's services and expenses made necessary thereby, and other damages incurred by the Owner and not expressly waived, such excess shall be paid to the Contractor. If such costs and damages exceed the unpaid balance, the Contractor shall pay the difference to the Owner. The amount to be paid to the Contractor or Owner, as the case may be, shall be certified by the Initial Decision Maker, upon application, and this obligation for payment shall survive termination of the Contract.

§ 14.3 Suspension by the Owner for Convenience

§ 14.3.1 The Owner may, without cause, order the Contractor in writing to suspend, delay or interrupt the Work, in whole or in part for such period of time as the Owner may determine.

§ 14.3.2 The Contract Sum and Contract Time shall be adjusted for increases in the cost and time caused by suspension, delay, or interruption under Section 14.3.1. Adjustment of the Contract Sum shall include profit. No adjustment shall be made to the extent

.1 that performance is, was, or would have been, so suspended, delayed, or interrupted, by another cause for which the Contractor is responsible; or
.2 that an equitable adjustment is made or denied under another provision of the Contract.

§ 14.4 Termination by the Owner for Convenience

§ 14.4.1 The Owner may, at any time, terminate the Contract for the Owner's convenience and without cause.

§ 14.4.2 Upon receipt of notice from the Owner of such termination for the Owner's convenience, the Contractor shall

.1 cease operations as directed by the Owner in the notice;
.2 take actions necessary, or that the Owner may direct, for the protection and preservation of the Work; and
.3 except for Work directed to be performed prior to the effective date of termination stated in the notice, terminate all existing subcontracts and purchase orders and enter into no further subcontracts and purchase orders.

§ 14.4.3 In case of such termination for the Owner's convenience, the Owner shall pay the Contractor for Work properly executed; costs incurred by reason of the termination, including costs attributable to termination of Subcontracts; and the termination fee, if any, set forth in the Agreement.

ARTICLE 15 CLAIMS AND DISPUTES

§ 15.1 Claims

§ 15.1.1 Definition

A Claim is a demand or assertion by one of the parties seeking, as a matter of right, payment of money, a change in the Contract Time, or other relief with respect to the terms of the Contract. The term "Claim" also includes other disputes and matters in question between the Owner and Contractor arising out of or relating to the Contract. The responsibility to substantiate Claims shall rest with the party making the Claim. This Section 15.1.1 does not require the Owner to file a Claim in order to impose liquidated damages in accordance with the Contract Documents.

§ 15.1.2 Time Limits on Claims

The Owner and Contractor shall commence all Claims and causes of action against the other and arising out of or related to the Contract, whether in contract, tort, breach of warranty or otherwise, in accordance with the requirements of the binding dispute resolution method selected in the Agreement and within the period specified by applicable law, but in any case not more than 10 years after the date of Substantial Completion of the Work. The Owner and Contractor waive all Claims and causes of action not commenced in accordance with this Section 15.1.2.

AIA Document A201™ – 2017. Copyright © 1911, 1915, 1918, 1925, 1937, 1951, 1958, 1961, 1963, 1966, 1970, 1976, 1987, 1997, 2007 and 2017 by The American Institute of Architects. **All rights reserved. WARNING: This AIA® Document is protected by U.S. Copyright Law and International Treaties. Unauthorized reproduction or distribution of this AIA® Document, or any portion of it, may result in severe civil and criminal penalties, and will be prosecuted to the maximum extent possible under the law.** This draft was produced by AIA software at 17:14:05 ET on 04/14/2020 under Order No.7760153018 which expires on 04/14/2021, and is not for resale.
User Notes: (1295017041)

§ 15.1.3 Notice of Claims

§ 15.1.3.1 Claims by either the Owner or Contractor, where the condition giving rise to the Claim is first discovered prior to expiration of the period for correction of the Work set forth in Section 12.2.2, shall be initiated by notice to the other party and to the Initial Decision Maker with a copy sent to the Architect, if the Architect is not serving as the Initial Decision Maker. Claims by either party under this Section 15.1.3.1 shall be initiated within 21 days after occurrence of the event giving rise to such Claim or within 21 days after the claimant first recognizes the condition giving rise to the Claim, whichever is later.

§ 15.1.3.2 Claims by either the Owner or Contractor, where the condition giving rise to the Claim is first discovered after expiration of the period for correction of the Work set forth in Section 12.2.2, shall be initiated by notice to the other party. In such event, no decision by the Initial Decision Maker is required.

§ 15.1.4 Continuing Contract Performance

§ 15.1.4.1 Pending final resolution of a Claim, except as otherwise agreed in writing or as provided in Section 9.7 and Article 14, the Contractor shall proceed diligently with performance of the Contract and the Owner shall continue to make payments in accordance with the Contract Documents.

§ 15.1.4.2 The Contract Sum and Contract Time shall be adjusted in accordance with the Initial Decision Maker's decision, subject to the right of either party to proceed in accordance with this Article 15. The Architect will issue Certificates for Payment in accordance with the decision of the Initial Decision Maker.

§ 15.1.5 Claims for Additional Cost

If the Contractor wishes to make a Claim for an increase in the Contract Sum, notice as provided in Section 15.1.3 shall be given before proceeding to execute the portion of the Work that is the subject of the Claim. Prior notice is not required for Claims relating to an emergency endangering life or property arising under Section 10.4.

§ 15.1.6 Claims for Additional Time

§ 15.1.6.1 If the Contractor wishes to make a Claim for an increase in the Contract Time, notice as provided in Section 15.1.3 shall be given. The Contractor's Claim shall include an estimate of cost and of probable effect of delay on progress of the Work. In the case of a continuing delay, only one Claim is necessary.

§ 15.1.6.2 If adverse weather conditions are the basis for a Claim for additional time, such Claim shall be documented by data substantiating that weather conditions were abnormal for the period of time, could not have been reasonably anticipated, and had an adverse effect on the scheduled construction.

§ 15.1.7 Waiver of Claims for Consequential Damages

The Contractor and Owner waive Claims against each other for consequential damages arising out of or relating to this Contract. This mutual waiver includes

- **.1** damages incurred by the Owner for rental expenses, for losses of use, income, profit, financing, business and reputation, and for loss of management or employee productivity or of the services of such persons; and
- **.2** damages incurred by the Contractor for principal office expenses including the compensation of personnel stationed there, for losses of financing, business and reputation, and for loss of profit, except anticipated profit arising directly from the Work.

This mutual waiver is applicable, without limitation, to all consequential damages due to either party's termination in accordance with Article 14. Nothing contained in this Section 15.1.7 shall be deemed to preclude assessment of liquidated damages, when applicable, in accordance with the requirements of the Contract Documents.

§ 15.2 Initial Decision

§ 15.2.1 Claims, excluding those where the condition giving rise to the Claim is first discovered after expiration of the period for correction of the Work set forth in Section 12.2.2 or arising under Sections 10.3, 10.4, and 11.5, shall be referred to the Initial Decision Maker for initial decision. The Architect will serve as the Initial Decision Maker, unless otherwise indicated in the Agreement. Except for those Claims excluded by this Section 15.2.1, an initial decision shall be required as a condition precedent to mediation of any Claim. If an initial decision has not been rendered within 30 days after the Claim has been referred to the Initial Decision Maker, the party asserting the Claim may demand mediation and binding dispute resolution without a decision having been rendered. Unless the Initial Decision Maker

AIA Document A201™ – 2017. Copyright © 1911, 1915, 1918, 1925, 1937, 1951, 1958, 1961, 1963, 1966, 1970, 1976, 1987, 1997, 2007 and 2017 by The American Institute of Architects. **All rights reserved. WARNING: This AIA® Document is protected by U.S. Copyright Law and International Treaties. Unauthorized reproduction or distribution of this AIA® Document, or any portion of it, may result in severe civil and criminal penalties, and will be prosecuted to the maximum extent possible under the law.** This draft was produced by AIA software at 17:14:05 ET on 04/14/2020 under Order No.7760153018 which expires on 04/14/2021, and is not for resale.
User Notes: (1295017041)

and all affected parties agree, the Initial Decision Maker will not decide disputes between the Contractor and persons or entities other than the Owner.

§ 15.2.2 The Initial Decision Maker will review Claims and within ten days of the receipt of a Claim take one or more of the following actions: (1) request additional supporting data from the claimant or a response with supporting data from the other party, (2) reject the Claim in whole or in part, (3) approve the Claim, (4) suggest a compromise, or (5) advise the parties that the Initial Decision Maker is unable to resolve the Claim if the Initial Decision Maker lacks sufficient information to evaluate the merits of the Claim or if the Initial Decision Maker concludes that, in the Initial Decision Maker's sole discretion, it would be inappropriate for the Initial Decision Maker to resolve the Claim.

§ 15.2.3 In evaluating Claims, the Initial Decision Maker may, but shall not be obligated to, consult with or seek information from either party or from persons with special knowledge or expertise who may assist the Initial Decision Maker in rendering a decision. The Initial Decision Maker may request the Owner to authorize retention of such persons at the Owner's expense.

§ 15.2.4 If the Initial Decision Maker requests a party to provide a response to a Claim or to furnish additional supporting data, such party shall respond, within ten days after receipt of the request, and shall either (1) provide a response on the requested supporting data, (2) advise the Initial Decision Maker when the response or supporting data will be furnished, or (3) advise the Initial Decision Maker that no supporting data will be furnished. Upon receipt of the response or supporting data, if any, the Initial Decision Maker will either reject or approve the Claim in whole or in part.

§ 15.2.5 The Initial Decision Maker will render an initial decision approving or rejecting the Claim, or indicating that the Initial Decision Maker is unable to resolve the Claim. This initial decision shall (1) be in writing; (2) state the reasons therefor; and (3) notify the parties and the Architect, if the Architect is not serving as the Initial Decision Maker, of any change in the Contract Sum or Contract Time or both. The initial decision shall be final and binding on the parties but subject to mediation and, if the parties fail to resolve their dispute through mediation, to binding dispute resolution.

§ 15.2.6 Either party may file for mediation of an initial decision at any time, subject to the terms of Section 15.2.6.1.

§ 15.2.6.1 Either party may, within 30 days from the date of receipt of an initial decision, demand in writing that the other party file for mediation. If such a demand is made and the party receiving the demand fails to file for mediation within 30 days after receipt thereof, then both parties waive their rights to mediate or pursue binding dispute resolution proceedings with respect to the initial decision.

§ 15.2.7 In the event of a Claim against the Contractor, the Owner may, but is not obligated to, notify the surety, if any, of the nature and amount of the Claim. If the Claim relates to a possibility of a Contractor's default, the Owner may, but is not obligated to, notify the surety and request the surety's assistance in resolving the controversy.

§ 15.2.8 If a Claim relates to or is the subject of a mechanic's lien, the party asserting such Claim may proceed in accordance with applicable law to comply with the lien notice or filing deadlines.

§ 15.3 Mediation

§ 15.3.1 Claims, disputes, or other matters in controversy arising out of or related to the Contract, except those waived as provided for in Sections 9.10.4, 9.10.5, and 15.1.7, shall be subject to mediation as a condition precedent to binding dispute resolution.

§ 15.3.2 The parties shall endeavor to resolve their Claims by mediation which, unless the parties mutually agree otherwise, shall be administered by the American Arbitration Association in accordance with its Construction Industry Mediation Procedures in effect on the date of the Agreement. A request for mediation shall be made in writing, delivered to the other party to the Contract, and filed with the person or entity administering the mediation. The request may be made concurrently with the filing of binding dispute resolution proceedings but, in such event, mediation shall proceed in advance of binding dispute resolution proceedings, which shall be stayed pending mediation for a period of 60 days from the date of filing, unless stayed for a longer period by agreement of the parties or court order. If an arbitration is stayed pursuant to this Section 15.3.2, the parties may nonetheless proceed to the selection of the arbitrator(s) and agree upon a schedule for later proceedings.

AIA Document A201™ – 2017. Copyright © 1911, 1915, 1918, 1925, 1937, 1951, 1958, 1961, 1963, 1966, 1970, 1976, 1987, 1997, 2007 and 2017 by The American Institute of Architects. **All rights reserved. WARNING: This AIA® Document is protected by U.S. Copyright Law and International Treaties. Unauthorized reproduction or distribution of this AIA® Document, or any portion of it, may result in severe civil and criminal penalties, and will be prosecuted to the maximum extent possible under the law.** This draft was produced by AIA software at 17:14:05 ET on 04/14/2020 under Order No.7760153018 which expires on 04/14/2021, and is not for resale.
User Notes: (1295017041)

§ 15.3.3 Either party may, within 30 days from the date that mediation has been concluded without resolution of the dispute or 60 days after mediation has been demanded without resolution of the dispute, demand in writing that the other party file for binding dispute resolution. If such a demand is made and the party receiving the demand fails to file for binding dispute resolution within 60 days after receipt thereof, then both parties waive their rights to binding dispute resolution proceedings with respect to the initial decision.

§ 15.3.4 The parties shall share the mediator's fee and any filing fees equally. The mediation shall be held in the place where the Project is located, unless another location is mutually agreed upon. Agreements reached in mediation shall be enforceable as settlement agreements in any court having jurisdiction thereof.

§ 15.4 Arbitration

§ 15.4.1 If the parties have selected arbitration as the method for binding dispute resolution in the Agreement, any Claim subject to, but not resolved by, mediation shall be subject to arbitration which, unless the parties mutually agree otherwise, shall be administered by the American Arbitration Association in accordance with its Construction Industry Arbitration Rules in effect on the date of the Agreement. The Arbitration shall be conducted in the place where the Project is located, unless another location is mutually agreed upon. A demand for arbitration shall be made in writing, delivered to the other party to the Contract, and filed with the person or entity administering the arbitration. The party filing a notice of demand for arbitration must assert in the demand all Claims then known to that party on which arbitration is permitted to be demanded.

§ 15.4.1.1 A demand for arbitration shall be made no earlier than concurrently with the filing of a request for mediation, but in no event shall it be made after the date when the institution of legal or equitable proceedings based on the Claim would be barred by the applicable statute of limitations. For statute of limitations purposes, receipt of a written demand for arbitration by the person or entity administering the arbitration shall constitute the institution of legal or equitable proceedings based on the Claim.

§ 15.4.2 The award rendered by the arbitrator or arbitrators shall be final, and judgment may be entered upon it in accordance with applicable law in any court having jurisdiction thereof.

§ 15.4.3 The foregoing agreement to arbitrate and other agreements to arbitrate with an additional person or entity duly consented to by parties to the Agreement, shall be specifically enforceable under applicable law in any court having jurisdiction thereof.

§ 15.4.4 Consolidation or Joinder

§ 15.4.4.1 Subject to the rules of the American Arbitration Association or other applicable arbitration rules, either party may consolidate an arbitration conducted under this Agreement with any other arbitration to which it is a party provided that (1) the arbitration agreement governing the other arbitration permits consolidation, (2) the arbitrations to be consolidated substantially involve common questions of law or fact, and (3) the arbitrations employ materially similar procedural rules and methods for selecting arbitrator(s).

§ 15.4.4.2 Subject to the rules of the American Arbitration Association or other applicable arbitration rules, either party may include by joinder persons or entities substantially involved in a common question of law or fact whose presence is required if complete relief is to be accorded in arbitration, provided that the party sought to be joined consents in writing to such joinder. Consent to arbitration involving an additional person or entity shall not constitute consent to arbitration of any claim, dispute or other matter in question not described in the written consent.

§ 15.4.4.3 The Owner and Contractor grant to any person or entity made a party to an arbitration conducted under this Section 15.4, whether by joinder or consolidation, the same rights of joinder and consolidation as those of the Owner and Contractor under this Agreement.

AIA Document A201™ – 2017. Copyright © 1911, 1915, 1918, 1925, 1937, 1951, 1958, 1961, 1963, 1966, 1970, 1976, 1987, 1997, 2007 and 2017 by The American Institute of Architects. **All rights reserved. WARNING: This AIA® Document is protected by U.S. Copyright Law and International Treaties. Unauthorized reproduction or distribution of this AIA® Document, or any portion of it, may result in severe civil and criminal penalties, and will be prosecuted to the maximum extent possible under the law.** This draft was produced by AIA software at 17:14:05 ET on 04/14/2020 under Order No.7760153018 which expires on 04/14/2021, and is not for resale.
User Notes: (1295017041)