BID DOCUMENTS
FOR

IFB 21-PW-003
MEADOWLARK LANE PEDESTRIAN PATH RECONSTRUCTION

CORR Project – PW2081

CITY OF RIO RANCHO, NEW MEXICO

July 2020

PREPARED BY:
City of Rio Rancho
Department of Finance/Purchasing Division
3200 Civic Center Circle, NE
Rio Rancho, New Mexico 87144
Phone (505) 891-5064

Table of Contents

Advertisement for Bid 1
Instructions To Bidders 2
Acknowledgment Form 18
Notice To Contractors 19
Supplemental Conditions 25

Sample Contract Forms

Standard Form of Agreement Between Owner and Contractor on the Basis of a Stipulated Price 44
Performance Bond 51
Labor and Material Payment Bond 53

Bid Submission Packet

Bid submission packet must include the following items:

Bid Submission Cover Page 55
Bid Form 56
Bidder's Listing of Subcontractors for Compliance with Subcontractor's Fair Practices Act 60
Bid Bond 61
Local/Area/Resident/Resident Veteran/Recycled Content Goods Preference Certification Form 63
Resident Veterans Preference Certification 66
EEOC Form 67
Non-Collusion Affidavit 68

Project Specifications and Attachments

Wage Rate Determination (As Attached)
2007 Standard General Conditions of Construction Contract (EJCDC) (As Attached)
Development Process Manual (DPM) Chapter II.7 Revised for Public Works (As Attached)
Specifications and Drawings (As Attached)

CITY OF RIO RANCHO
IFB 21-PW-003
MEADOWLARK LANE PEDESTRIAN PATH RECONSTRUCTION

Due to the current health concerns and the changing environment in respect to COVID-19 the City is requesting all bid submissions be submitted via email to mschimmel@rrnm.gov on July 30, 2020 no later than 10:00 AM MST. The City will conduct the public bid opening and reading of bids received via the GoToMeeting service. A link will be provided on the City's website. Bidders must submit their original bid in a sealed envelope or container via USPS or other mailing service no later than August 4, 2020 to the address specified in the bid document. Bidders will be deemed Non-Responsive if original physical bid submissions are received after the aforementioned date.

This project is partially funded by the New Mexico Department of Transportation (NMDOT); therefore, the City of Rio Rancho and the awarded contractor must comply with all State requirements.

Project Description:
The City of Rio Rancho is requesting formal bids for removal of the existing 12' wide asphalt pedestrian path on Meadowlark Lane, from approximately NM528 to Eileen Road, replacing it in the same footprint, with 4" thick concrete and removing and replacing three sidewalk culverts. This project will also include constructing approximately 1000 L.F. of new 5' wide sidewalk with two new ADA compliant curb ramps from Eileen Road to Sara Road.

A Pre-Bid meeting will be held online through the GoToMeeting service at 9:00 a.m., Local time, July 16, 2020. A link for the meeting will be provided on the City's website at: https://rrnm.gov/bids.

Plans, Specifications and other Contract Documents, including instructions to Bidders and Bid Forms Files are available on the City of Rio Rancho's IFB/RFP Postings web page via the following link in electronic format only: https://rrnm.gov/169/IFBRFP-Postings. Bidders are asked to be patient while downloading these files from the website.

In addition, hardcopies of printed plan sets may be obtained at the Contractors own expense through Albuquerque Reprographics, 4716 McLeod NE, Albuquerque, NM 87109, (505) 884-0862 or Academy Reprographics, 8900-N San Mateo Blvd. NE, Albuquerque, NM 87113 (505) 821-6666.

This IFB is issued on behalf of the City of Rio Rancho by the Purchasing Division, which is the **SOLE POINT OF CONTACT** DURING THE PROCUREMENT PROCESS. Any inquires or requests during the procurement process shall be directed to the following point of contact:

Issuing Office: City of Rio Rancho
Purchasing and Contracts Division
3200 Civic Center Circle NE, Suite 300
Rio Rancho, NM 87144
(505) 891-5064

Advertised: July 13, 2020 – Albuquerque Journal

INSTRUCTIONS TO BIDDERS

1. Defined Terms.

Terms used in these Instructions to Bidders which are defined in the Standard General Conditions of the Construction Contract (EJCDC) (2007 Edition) have the meanings assigned to them in the General Conditions.

Certain additional terms used in these Instructions to Bidders have the meanings indicated below which are applicable to both the singular and plural thereof.

1.1 BIDDER — one who submits a Bid directly to OWNER as distinct from a sub–bidder, who submits a bid to a BIDDER.

1.2 Issuing Office –the office on behalf of which this IFB is issued by the City. The Issuing office is the SOLE POINT OF CONTACT during the procurement process. Any inquires or requests during the procurement process shall be directed to the issuing office.

1.3 Distribution Office — the office from which the Bidding Documents are to be distributed as indicated in the Advertisement for Bids or Invitation to Bid.

1.4 Successful Bidder — the responsible BIDDER offering the lowest, responsive bid to whom OWNER (on the basis of OWNER's evaluation as hereinafter provided) makes an award.

2. Copies of Bidding Documents.

2.1 Complete copies of Bidding Documents, except for the Standard Specifications, may be obtained from the Distribution Office as indicated in the Advertisement for Bids.

2.2 The Standard Specifications for the Project are the New Mexico State Department of Transportation Standard Specifications for Highway and Bridge Construction, Current Edition, as amended and published by the New Mexico State Department of Transportation; New Mexico Standard Specifications for Public Works Construction, Current Edition, as amended and published by the New Mexico Chapter of the American Public Works Association, as well as latest modifications to various NMAPWA Sections per City of Rio Rancho that can be accessed online at: https://rrnm.gov/530/WaterandWastewater-Standard-Details; and the City of Rio Rancho Standard Details for Streets & Drainage. Copies of the Standard Specifications for Highway and Bridge Construction may be obtained online at: http://dot.state.nm.us/content/nmdot/en/Standards.html. Copies of the City of Rio Rancho Standard Details and Specifications for Streets & Drainage may be obtained online at:

http://www.rrnm.gov/DesignStandards. The order of precedent for dealing with conflicts will be as follows: Addenda, Required Documents for Bid Submittal, Notice to Contractors, Invitation for Bids, Special Provisions, Construction Plans (other than Standard Drawings), Supplemental Specifications, City or Rio Rancho Standard Specifications, New Mexico Department of Transportation Specifications, American Public Works Association Specifications, City of Rio Rancho Standard Drawings, New Mexico Department of Transportation Standard Drawings

2.3 Complete sets of Bidding Documents must be used in preparing Bids; neither OWNER nor ENGINEER assume any responsibility for errors or misinterpretations resulting from the use of incomplete sets of Bidding Documents.

2.4 OWNER and ENGINEER in making copies of Bidding Documents available on the above terms do so only for the purpose of obtaining Bids for the Work and do not confer a license or grant for any other use.

3. Qualifications of BIDDERS.

3.1 OWNER may make such investigations it deems necessary to determine the ability of the BIDDER to perform the Work, and the BIDDER shall within seven (7) calendar days furnish to the OWNER all such information and data for this purpose as the OWNER may request. OWNER reserves the right to reject any bid if the evidence submitted by, or investigation of, such BIDDER fails to satisfy the OWNER that such BIDDER is properly qualified to carry out the obligations of the Agreement and to complete the Work contemplated herein.

3.2 BIDDER shall have a New Mexico Contractor's License and all classifications required to perform the Work, and shall provide such information in the space provided in the Bid Form.

3.3 In order to submit a bid valued at more than sixty thousand dollars ($60,000) in order to respond to a request for proposals or to be considered for award of any portion of a public works project greater than sixty thousand dollars ($60,000) for a public works project that is subject to the Public Works Minimum Wage Act [Section 13-4-10 NMSA 1978, et seq.], the CONTRACTOR, serving as a prime contractor or not, shall be registered with the Labor and Industrial Division of the New Mexico Department of Workforce Solutions. Each CONTRACTOR, prime contractor or subcontractor is required to be registered pursuant to this subsection.

4. Examination of Contract Documents and Site.

4.1 It is the responsibility of each BIDDER before submitting a Bid:

4.4.1 To examine thoroughly the Contract Documents and other related data identified in the Bidding Documents (including "technical data" referred to below);

4.4.2 To visit the site(s) to become familiar with and satisfy BIDDER as to the general, local and site conditions that may affect cost, progress, performance or furnishing of the Work;

4.4.3 To consider federal, state and local Laws and Regulations that may affect cost, progress, performance or furnishing of the Work;

4.4.4 To study and carefully correlate BIDDER's knowledge and observations with the Contract Documents and such other related data; and

4.4.5 To promptly notify OWNER of any and all conflicts, errors, ambiguities or discrepancies which BIDDER may discover in or between the Contract Documents and such other related documents.

4.2 Information and data shown or indicated in the Contract Documents with respect to existing Underground Facilities at or contiguous to the site is based upon information and data furnished to OWNER and ENGINEER by owners of such Underground Facilities or others, and OWNER and ENGINEER make no guarantees as to the accuracy or completeness thereof unless it is expressly provided otherwise in the Supplementary Conditions.

4.3 Before submitting a Bid each BIDDER will be responsible to obtain such additional or supplementary examinations, investigations, explorations, tests, studies and data concerning conditions (surface, subsurface and Underground Facilities) at or contiguous to the site or otherwise, which may affect cost, progress, performance or furnishing of the Work or which relate to any aspect of the means, methods, techniques, sequences or procedures of construction to be employed by BIDDER and safety precautions and programs incident thereto or which BIDDER deems necessary to determine its Bid for performing and furnishing the Work in accordance with the time, price and other terms and conditions of the Contract Documents.

4.4 On request, OWNER will provide each BIDDER access to the site to conduct such examinations, investigations, explorations, tests and studies as each BIDDER deems necessary for submission of a Bid. BIDDER must fill all holes and clean up and restore the site to its former conditions upon completion of such explorations, investigations, tests and studies.

4.5 Reference is made to the Supplementary Specifications for the identification of the general nature of any work that is to be performed at the site by OWNER or others (such as utilities and other prime contractors) that relates to the work for which a Bid is to be submitted. On request, OWNER will provide to each BIDDER for examination access to or copies of Contract Documents (other than portions thereof related to price) for such work.

4.6 The submission of a Bid will constitute an incontrovertible representation by BIDDER that BIDDER has complied with every requirement of this Article 4, that without exception the Bid is premised upon performing and furnishing the Work required by the Contract Documents and applying the specific means, methods, techniques, sequences or procedures of construction (if any) that may be shown or indicated or expressly required by the Contract Documents, that BIDDER has given OWNER written notice of all conflicts, errors, ambiguities and discrepancies that BIDDER has discovered in the Contract Documents and the written resolutions thereof by OWNER is acceptable to BIDDER, and that the Contract Documents are generally sufficient to indicate and convey understanding of all terms and conditions for performing and furnishing the Work.

4.7 The provisions of the above items 4.1 through 4.7, inclusive, do not apply to Asbestos, Polychlorinated biphenyls (PCBs), Petroleum, Hazardous Waste or Radioactive Material covered by Paragraph 4.06 of the General Conditions.

5. Availability of Lands for Work, etc.

The lands upon which the Work is to be performed, rights–of–way and easements for access thereto and other lands designated for use by CONTRACTOR in performing the Work are identified in the Contract Documents.

All additional lands and access thereto required for temporary construction facilities, construction equipment or storage of materials and equipment to be incorporated in the Work are to be obtained and paid for by CONTRACTOR. Easements for permanent structures or permanent changes in existing facilities are to be obtained and paid for by OWNER unless otherwise provided in the Contract Documents. Access to lands used for offsite disposal of excess soil will be obtained and paid for by CONTRACTOR.

6. Interpretations and Addenda.

6.1 All questions about the meaning or intent of the Bidding Documents shall be submitted to OWNER in writing. Interpretations or clarifications considered necessary by OWNER in response to such questions will be issued by Addenda mailed or delivered to all parties recorded by the Issuing Office as having received the Bidding Documents. Questions received less

than ten (10) calendar days prior to the date for opening of Bids may not be answered. Only questions answered by formal written Addenda will be binding. Oral and other interpretations or clarifications will be without legal effect.

6.2 Addenda may also be issued to modify the Bidding Documents as deemed advisable by OWNER or ENGINEER.

6.3 Each Addendum shall be a part of the Contract Documents to the same extent as though contained in the original documents and itemized listings thereof and all BIDDERS shall be bound by such Addenda. Each BIDDER shall ascertain, prior to submitting the bid, that the BIDDER has received all Addenda issued, and shall acknowledge receipt of each Addendum on his Bid Form.

7. Bid Security.

7.1 Each Bid must be accompanied by Bid Security made payable to OWNER in an amount of at least five (5%) percent of BIDDER's total bid amount and in the form of a certified or bank check or a Bid Bond on a form acceptable to the OWNER issued by a surety meeting the requirements of Paragraph 5.01 of the General Conditions.

7.2 The Bid Security is submitted as a guarantee that the BIDDER, if awarded the Contract, will promptly execute the Agreement in accordance with the Bid Form and in the manner and form required by the Contract Documents, will furnish good and sufficient bond for the faithful performance of the same and for the payment of all labor and materials, and furnish required certificates of insurance.

7.3 The Bid Securities of all BIDDERS except the three lowest will be returned promptly after the canvas of bids.

7.4 OWNER shall have the right to retain the Bid Security of the three apparent lowest BIDDERS until either (a) the Agreement has been executed and the Labor and Material Payment Bond and the Performance Bond and all required proof of insurance, including certificates of insurance, have been furnished to OWNER; (b) the time specified in the Bidding Documents has elapsed so that BIDDER may withdraw the Bid Proposal; or (c) all bids have been rejected, whichever occurs first.

7.5 If the Successful Bidder fails to execute and deliver the Agreement and furnish the required Performance Bond, Labor and Material Payment Bond and certificates of insurance within the required time period after receipt of the Notice of Recommendation to Award, OWNER may annul the Notice

of Recommendation to Award and the Bid Security of that BIDDER shall be forfeited to OWNER as liquidated damages, not as a penalty.

7.6 Bids submitted without the required Bid Security will not be considered.

7.7 The Performance Bond and the Payment Bond will be equal to one hundred (100%) percent of the contract price.

8. Contract Times.

The number of days within which, or the dates by which, the Work is to be substantially complete are set forth in the Bid Form.

9. Liquidated Damages.

Provisions for liquidated damages, if any, are set forth in the Bid Form.

10. Substitute and "Or–Equal" Items.

The Contract, if awarded, will be on the basis of materials and equipment described in the Drawings or specified in the Specifications without consideration of possible substitute or "or–equal" items. Whenever it is indicated in the Drawings or specified in the Specifications that a substitute or "or–equal" item of material or equipment may be furnished or used by CONTRACTOR if acceptable to ENGINEER, application for such acceptance will not be considered by ENGINEER until after the Effective Date of the Agreement, unless noted in the Specifications. The procedure for submission of any such application by CONTRACTOR and consideration by ENGINEER is set forth in Paragraph 6.05 of the General Conditions and may be supplemented in the General Requirements.

11. Subcontractors, Suppliers and Others.

11.1 If the Supplementary Conditions require the identity of certain Subcontractors, Suppliers and other persons and organizations (including those who are to furnish the principal items of material and equipment) to be submitted to OWNER in advance of the Notice of Award, the apparent Successful Bidder, and any other BIDDER so requested, shall, within seven calendar (7) days request by OWNER, submit to OWNER a list of all such Subcontractors, Suppliers and other persons and organizations proposed for those portions of the Work for which such identification is required. Such list shall be accompanied by an experience statement with pertinent information regarding similar projects and other evidence of qualification for each such Subcontractor, Supplier, person or organization if requested by OWNER. An OWNER or ENGINEER who after due investigation has reasonable objection to any proposed Subcontractor, Supplier, other person or organization, may before the Notice of Award is given request apparent

Successful Bidder to submit an acceptable substitute, in which case apparent Successful Bidder may submit an acceptable substitute, that BIDDER's Bid price will be increased (or decreased) by the difference in cost occasioned by such substitution, and OWNER may consider such price adjustment in evaluating Bids and making the contract award. If the apparent Successful Bidder declines to make any such substitution, he will not thereby sacrifice his Bid Security. Any Subcontractor, other person or organization so listed and to whom OWNER does not make written objection prior to the giving of the Notice of Award shall be deemed acceptable to OWNER. This subsection does not apply to the BIDDER'S listing of Subcontractors for Compliance with the Subcontractor's Fair Practices Act, which must be complete at the time the Bid is submitted to OWNER.

11.2 Some Public Works Projects may be subject to the provisions of the "Subcontractors Fair Practices Act" (Chapter 18, Laws 1988; Sections 13–4–31 through 13–4–43 NMSA 1978). When this Act is applicable, BIDDER shall comply with the requirements set forth in the Supplementary Conditions of these Bidding Documents.

11.3 No CONTRACTOR shall be required to employ any Subcontractor, Supplier, other person or organization against whom CONTRACTOR has reasonable objection.

12. Bid Form.

12.1 Prices shall be filled in for all items on the Bid Form, including alternates as may be required on the Bid Form. The price for each item shall include its pro–rata share of overhead, profit and insurance. Prices shall also include any and all license and royalty fees for products, materials and processes. Prices shall be shown in numerals in ink, printed or typed in the spaces provided. Any alterations to the bid amounts by erasures or by interlineations shall be initialed by the signer of the Bid Form.

12.2 BIDDER shall include all applicable taxes, except New Mexico Gross Receipts Tax, in all bid amounts, including Lump Sum, Unit Price and Alternate Bid amounts. The Bid Form shall contain a separate entry for New Mexico Gross Receipts Tax immediately preceding the Base Bid. All Alternates shall contain a separate entry for New Mexico Gross Receipts Tax immediately preceding the total amount of the Alternate. No Unit Prices nor Lump Sum Amounts contained within the bid shall include New Mexico Gross Receipts Tax.

12.3 Bids by corporations must be executed in the corporate name by the president or a vice–president (or other corporate officer accompanied by evidence of authority to sign) and the corporate seal must be affixed and

attested by the secretary or an assistant secretary. The corporate address and state of incorporation must be shown below the signature.

12.4 Bids by partnerships must be executed in the partnership name and signed by a partner, whose title must appear under the signature and the official address of the partnership must be shown below the signature.

12.5 All names must be typed or printed in ink below the signature.

12.6 BIDDER shall acknowledge receipt of all Addenda by entering the number and date of each addendum in the space provided on the Bid Form.

12.7 The address and telephone number for communications regarding the Bid must be shown.

12.8 If BIDDER is an out–of–state corporation, evidence of authority to conduct business as an out–of–state corporation in New Mexico shall be provided in accordance with Paragraph 3 above.

12.9 BIDDER shall enter his New Mexico Contractor's License Number and Classifications in the space provided on the Bid Form.

13. Submission of Bids.

Bids shall be submitted at the time and place indicated in the Advertisement or Invitation to Bid and shall be enclosed in an opaque sealed envelope, marked with the Project title (and, if applicable, the designated portion of the Project for which the Bid is submitted) and name and address of BIDDER and accompanied by the Bid security and other required documents. If the Bid is sent through the mail or other delivery system the sealed envelope shall be enclosed in a separate envelope with the notation "BID ENCLOSED" on the face of it.

Delayed Opening or Closing of City Offices: In the event that City Hall is officially on a delayed opening for any reason (for example, inclement weather) and City Hall is not open at least two (2) hours prior to bid opening, the deadline for bid and proposal submissions will be delayed for exactly the amount of time indicated in the official City announcement. For example, if City Hall is on a two (2) hour delay, deadline for receipt of bids and proposals due prior to 12:00 p.m. will be delayed by two (2) hours and bids due after 12:00 p.m. will be due at their regularly scheduled time. Also, if City Hall is officially closed for any reason (such as inclement weather) for all or part of the day that submission of bids is due (other than an official, announced delayed opening), bids will be due at the same time on the following business day. Any delayed opening or closing of City Hall will be announced on the City's website, http://www.rrnm.gov.

14. Application of Resident, Veteran, Local, Area, and Recycled Content Goods Preference.

DEFINITIONS:

LOCAL BUSINESS means a Resident Business or Resident Contractor which:
(a) Is authorized to do and is doing business under the laws of the State of New Mexico;
(b) Possesses a current city business registration;
(c) Maintains its principal place of business within the corporate limits of the city; and
(d) Agrees to furnish evidence, in a form suitable to the city, of its payment of New Mexico Gross Receipts Tax.

AREA BUSINESS means a Resident Business or Resident Contractor which:
(a) Is authorized to do and is doing business under the laws of the State of New Mexico;
(b) Possesses a current city business registration;
(c) Maintains a bona fide place of business within the corporate limits of the city, and agrees to conduct its activities pursuant to the contract for which it is bidding or proposing, to the extent practicable, from that place of business; and
(d) Agrees to furnish evidence, in a form suitable to the city, of its payment of New Mexico Gross Receipts Tax.

RECYCLED CONTENT GOODS has the meaning set forth in NMSA 1978 § 13-1-21(A)(5), as amended from time to time.

RESIDENT BUSINESS has the meaning set forth in NMSA 1978 § 13-1-21(A)(6), as amended from time to time.

RESIDENT CONTRACTOR has the meaning set forth in NMSA 1978 § 13-4-2(A)(5), as amended from time to time.

RESIDENT VETERAN BUSINESS has the meaning set forth in NMSA 1978 § 13-1-22(A)(7), as amended from time to time.

RESIDENT VETERAN CONTRACTOR has the meaning set forth in NMSA 1978 § 13-4-2(A)(6), as amended from time to time.

STATUTORY PREFERENCE means the preference for Resident Businesses, Resident Contractors, Resident Veteran Businesses, Resident Veteran Contractors, and Recycled Content Goods provided in NMSA 1978 §§ 13-1-21 or 13-4-5, as amended from time to time.

QUALIFYING COMPANY means a company that qualifies for a Statutory Preference under NMSA 1978 §§ 13-1-21 or 13-4-5, as amended from time to time.

INSTRUCTIONS:

- In all invitations for bid and requests for proposals, the Statutory Preferences shall be applied in the manner set forth in NMSA 1978 §§ 13-1-21 or 13-4-5, as amended from time to time.
- A copy of a valid Resident Business, Resident Contractor, Resident Veteran Business, or Resident Veteran Contractor Certificate issued by the New Mexico Taxation & Revenue Department. Information regarding resident preference can be obtained by contacting the Point of Contact as listed herein.
- In addition to the Statutory Preferences, a preference for Local Businesses and Area Businesses shall be administered in the same manner as the Statutory Preferences, as follows:
    1. in the event a Local Business submits a qualifying bid or proposal and one or more Qualifying Companies also submits a bid or proposal, the Local Business shall receive a two percent (2%) preference in addition to (and not in lieu of) the Statutory Preference; and
    2. in the event an Area Business submits a qualifying bid or proposal and one or more Qualifying Companies also submits a bid or proposal, the Area Business shall receive a one percent (1%) preference in addition to (and not in lieu of) the Statutory Preference.
- In addition to the definitions and criteria set forth in this section, the central purchasing office may impose additional requirements regarding the nature, size and/or location of offerors or bidders in any request for proposals or invitation for bids. As a result, companies responding to such solicitations should review the solicitation documents thoroughly.
- Information regarding the City's Procurement Code and the application of the local and resident preference can be obtained by contacting the Point of Contact as listed herein.
- For consideration for the Area, Local, and Recycled Content Goods preference, the Offeror must complete the Preference Certification Form, attached hereto, in accordance with the instructions and return the form with its Technical Proposal.
- In addition to the definitions and criteria set forth in the section, when a joint bid or joint proposal is submitted by both resident and non-resident businesses, the resident business preference provided pursuant to Subsection B or C of the NMSA 1978 §§ 13-1-21 or 13-4-5, as amended from time to time , shall be reduced in proportion to the percentage of the contract, based on the dollar amount of the goods or services provided under the contract, that will be performed by a non-resident business as specified in the join bid or proposal.

15. Modification and Withdrawal of Bids.

15.1 Bids may be modified or withdrawn by an appropriate document duly executed (in the manner that a Bid must be executed) and delivered to the place where Bids are to be submitted at any time prior to the scheduled closing time for receipt of Bids.

15.2 If, within twenty–four (24) hours after Bids are opened, any BIDDER files a duly signed, written notice with OWNER and promptly thereafter demonstrates to the reasonable satisfaction of OWNER that there was a material and substantial mistake in the preparation of its Bid, that BIDDER

may withdraw its Bid and the Bid security will be returned. Thereafter, that BIDDER will be disqualified from further bidding on the Work to be provided under the Contract Documents.

16. Opening of Bids.

BIDDERS are invited to be present at the Bid Opening. The person(s) reading the bids will adhere to the following procedure prior to reading the amount of the bid:

16.1 Read name of BIDDER, BIDDER's New Mexico contractor's license number and classification, and when applicable the BIDDER's Resident Contractor Number.

16.2 Read the amount of the Bid Security.

16.3 Verify BIDDER's acknowledgment of Addenda.

16.4 Determine whether the Bid Proposal is signed.

16.5 Verify submittal of BIDDER's Listing of Subcontractors for compliance with Subcontractors Fair Practices Act.

16.6 Determine whether other requirements are met.

If any of the above requirements have not been met, the bid shall be read after the deficiency or deficiencies have been announced and noted.

17. Bids to Remain Subject to Acceptance.

All Bids shall remain subject to acceptance for the period of time after the scheduled closing time for receipt of bids as indicated on the Bid Form, but OWNER may, in its sole discretion, release any Bid and return the Bid security prior to that date.

18. Award of Contract.

18.1 OWNER reserves the right to reject any or all Bids, including without limitation the rights to reject any or all nonconforming, non–responsive, unbalanced or conditional Bids and to reject the Bid of any BIDDER if OWNER believes that it would not be in the best interest of the Project to make an award to that BIDDER, whether because the Bid is not responsive or the BIDDER is unqualified or of doubtful financial ability or fails to meet any other pertinent standard or criteria established by OWNER. OWNER also reserves the right to waive all informalities not involving price, time or changes in the Work and to negotiate contract terms with the Successful Bidder. OWNER reserves the right to cancel the opportunity for submission of bids. OWNER further reserves the right to reject for OWNER's

convenience all bids submitted. BIDDERS shall not be entitled to recover damages of any nature against OWNER for OWNER's rejection of all bids, for cause or for convenience.

18.2 Discrepancies between the multiplication of units of Work and unit prices will be resolved in favor of the unit prices. Discrepancies between the indicated sum of any column of figures and the correct sum thereof will be resolved in favor of the correct sum. Discrepancies between words and figures will be resolved in favor of the words.

18.3 In evaluating Bids, OWNER may consider the qualifications of BIDDERS, whether or not the Bids comply with the prescribed requirements, and such alternates, unit prices and other data, as may be requested in the Bid Form or prior to the Notice of Award.

18.4 OWNER may consider the qualifications and experience of Subcontractors, Suppliers, and other persons and organizations proposed for those portions of the Work as to which the identity of Subcontractors, Suppliers, and other persons and organizations must be submitted as provided in the Supplementary Conditions. OWNER also may consider the operating costs, maintenance requirements, performance data and guarantees of major items of materials and equipment proposed for incorporation in the Work when such data is required to be submitted prior to the Notice of Award.

18.5 OWNER may conduct such investigations as OWNER deems necessary to assist in the evaluation of any Bid and to establish the responsibility, qualifications and financial ability of BIDDERS, proposed Subcontractors, Suppliers and other persons and organizations to perform and furnish the Work in accordance with the Contract Documents to OWNER's satisfaction within the prescribed time.

18.6 If a Contract is awarded, it will be awarded to the lowest responsive bid submitted from a responsible BIDDER on the Base Bid shown on the Bid Form; provided, however, that if the Bid Form is a Unit Price Bid Form and there is a discrepancy between the amount shown as the Base Bid and the actual total amount of the Base Bid determined by multiplying the Unit Price shown for each Bid Item by the Estimated Quantity shown for that Bid Item, adding each such amount to obtain a subtotal amount and then adding the New Mexico Gross Receipts Tax amount determined by multiplying the subtotal amount by the New Mexico Gross Receipts Tax percentage given on the Bid Form, it will be awarded to the lowest responsible BIDDER on the actual total amount of the Base Bid; provided further, that when Alternates are to be accepted by OWNER, it will be awarded to the Responsible BIDDER who bids the lowest combined bid of the Base Bid and all accepted Alternates. For each Alternate, New Mexico Gross Receipts Tax shall be shown as a separate entry after the subtotal

using the method described above, and shall be followed by a total derived by adding the subtotal and Gross Receipts Tax amounts. Alternates, if any, shall be accepted by the City, at its sole discretion, in any order or combination thereof.

18.7 In the event that two (2) or more of the bids submitted are identical in price and are the low bid, the OWNER may award by lottery to one of the identical low Bidders.

18.8 Preference: Various preferences will be afforded to an Offeror who qualifies as a resident Offeror in accordance with New Mexico State Law and City of Rio Rancho Ordinance. This section shall not apply when the expenditure includes federal funds for a specific purchase.

18.9 If the Contract is to be awarded, the OWNER will give the apparent Successful Bidder a Notice of Recommendation to Award within the period specified in the Bid Form unless the BIDDER and the OWNER agree to extend the period specified.

19. Signing of Agreement.

If and when OWNER gives a Notice of Recommendation to Award to the Successful Bidder, it will be accompanied by the required number of unsigned counterparts of the Agreement with all other written Contract Documents attached. Within ten (10) calendar days thereafter, BIDDER shall sign and deliver the required number of counterparts of the Agreement and attached documents to OWNER with the required Performance and Payment Bonds in accordance with Paragraph 5 of the General Conditions and the Supplementary Conditions, and Certificates of Insurance in accordance with Paragraph 5.4 of the General Conditions and the Supplementary Conditions. Within ten (10) calendar days following the Award of Contract by OWNER, OWNER shall deliver one fully signed counterpart to CONTRACTOR. Each counterpart is to be accompanied by a complete set of the Drawings with appropriate identification.

20. Non-Appropriations.

The terms of this Agreement and all amounts payable hereunder are contingent upon sufficient appropriations therefore by the City's Governing Body. If sufficient appropriations are not made, the City shall notify the Contractor of the same, and this Agreement shall terminate forthwith.

21. Pre–Bid Conference.

When a pre–bid conference date is given in the Advertisement for Bid or by Addendum, the conference shall be conducted to explain the Project. Attendance at the pre–bid conference shall be mandatory only when so required in the Advertisement for Bids or

Addendum. When attendance is mandatory, failure to attend shall disqualify the prospective BIDDER from submitting his Bid. Whenever attendance is not specified as mandatory, prospective BIDDERS are encouraged to attend and should be prepared to ask questions or request clarifications regarding the Project and Bidding Documents. Nothing stated at the pre–bid conference shall change the Bidding Documents unless a change is made by Addendum. When attendance is not mandatory, failure of a BIDDER to attend the pre–bid conference shall mean that the Bidding Documents are clear, unambiguous, and acceptable to all non–participants, with respect to all who submit bids.

22. Guarantee Provisions.

The CONTRACTOR shall guarantee the Work as provided in the General Conditions and Supplementary Conditions.

23. Affirmative Action Program.

The CONTRACTOR shall comply with the Affirmative Action/Equal Employment Opportunity and Nondiscrimination requirements in the Supplementary Conditions.

24. Wage Rates.

The BIDDER's attention is directed to the fact that wages to be paid on this Project shall not be less than the prevailing wage rates as listed by the New Mexico State Office of Labor Commissioner and, where applicable, the prevailing Federal Wage Rate Decision listed by the U.S. Department of Labor in effect at the scheduled closing time for receipt of bids.

In the event more than one (1) wage scale applies to the Project, the appropriate wages to be paid to the various classes of laborers and mechanics employed under the contract shall be the highest prevailing wages for each job classification for the particular type of construction being performed by the construction worker.

25. Permits.

The CONTRACTOR shall bear the sole responsibility of securing and paying for permits, fees, and licenses required for execution of Work as applicable at the time of receipt of bids.

26. Collusion.

All BIDDERS must submit an affidavit of non-collusion and certify that the bid submitted was arrived at without resorting to any collusive bidding practices. Collusion is defined as any activity that artificially affects prices when bidding on a contract or activity that restricts competition among bidders or potential bidders by exchanging or sharing information with firms presumed to be competing for the same contract.

Any person with knowledge of collusive bidding or other misconduct is encouraged to report possible violations to the City Purchasing Manager.

27. Worker's Compensation Insurance/Non–Resident Contractors.

Notice is given that in addition to the requirements of the General Conditions of the Contract, Non–Resident Contractors shall comply with the provisions of Sections 52–1–66; 59A–17–10.1; 59A–18–1; and 59A–18–12 NMSA 1978, pertaining to the worker's compensation insurance policy and rate for employers not domiciled in New Mexico.

28. STATE OF NEW MEXICO SUBCONTRACTORS FAIR PRACTICES ACT. This Public Works Project is subject to the provisions of the Subcontractors Fair Practices of the State of New Mexico.

28.1 General: This law requires that all work being performed by a Subcontractor in the amount exceeding the listing threshold be performed under the provisions of the Subcontractors Fair Practices Act.

28.2 Listing Threshold Amount: The listing threshold shall be five thousand dollars ($5,000) or ½ of 1% of the Engineer's Estimate of the total project cost, not including alternates, whichever is greater.

28.3 List of Subcontractors Required: BIDDER shall define the categories of Subcontractors in his bid and shall list no more than one Subcontractor for each category. This listing shall only apply to those Subcontractors whose listing is required pursuant to the New Mexico Subcontractors Fair Practices Act and estimated work exceeds the threshold dollar amount given in Section 27.2 above. This list shall be completed on the form entitled "Bidder's Listing of Subcontractor for Compliance with the Subcontractors Fair Practices Act" immediately after the Bid Form. This sheet must be filled in if a Subcontractor whose work exceeds the threshold limit is to be used. The list shall include the name and business address of each Subcontractor under potential subcontract to the bidder, who will perform work or labor or render service, which exceeds the threshold amount. All Subcontractors whose listing is required pursuant to the New Mexico Subcontractors Fair Practices Act and whose estimated work exceeds the threshold shall be listed at the time the Bid is submitted to OWNER. With respect to any category of work for which no subcontractor is listed in the above-referenced form and the BIDDER does not state that 'no bid was received' or that 'only one bid was received', BIDDER should be prepared to document (1) that it is licensed and prepared to do the work itself, and/or (2) that it has determined, at the time of submission of its bid, that the category of work does not exceed the threshold dollar amount given in

Section 27.2 above. Failure to complete this form will result in a non-responsive bid that will be rejected.

28.4 Delays Attributable to Hearings Required by the Subcontractors Fair Practices Act: In the event a hearing is held pursuant to the provisions of the Subcontractors Fair Practices Act and a delay in the Work of the Project is caused as a result, the CONTRACTOR shall not be entitled to an increase in the contract amount or contract time.

28.5 Applicability of this Section: Any questions regarding this act should be referred to Legal Counsel.

29. The selected Contractor shall comply with all applicable Worker's Safety Requirements of the U.S. Occupational Health and Safety Administration.

30. The City of Rio Rancho Procurement Code, Section 36.37, Paragraph B, notes that New Mexico criminal statutes impose felony penalties for illegal bribes, gratuities and kickbacks.

31. PURCHASING OFFICE

This IFB is issued on behalf of the City of Rio Rancho by the Purchasing Office, which is THE SOLE POINT OF CONTACT DURING THE PROCUREMENT PROCESS. Communications initiated by a bidder to this IFB with members of the Governing Body or City personnel, other than as coordinated by the Point of Contact noted below, shall be grounds for Offeror disqualification. Any inquiries or requests during this procurement shall be submitted to the following Point of Contact in writing:

City of Rio Rancho
Department of Finance Services, Purchasing Division
Attention: Matthew Schimmel
3200 Civic Center Circle NE, STE 300
Rio Rancho, NM 87144
Telephone: (505) 891-5064
Fax: (505) 891-5762
mschimmel@rrnm.gov

Return of Acknowledgement Form for Distribution List. Potential Bidders should return by email, facsimile, registered mail or in person the Acknowledgement Form (see on next page) to have their firm placed on the procurement distribution list. Failure to return this form will prevent the potential Bidder's firm name from appearing on the procurement distribution list. The procurement distribution list will be used for distribution of important information regarding this solicitation. A valid email address must be provided.

CITY OF RIO RANCHO
DEPARTMENT OF FINANCIAL SERVICES
IFB 21-PW-003
MEADOWLARK LANE PEDESTRIAN PATH RECONSTRUCTION

ACKNOWLEDGMENT FORM

Please complete this form and return it to the City of Rio Rancho Financial Services Department. Failure to return this form will not exclude a firm from submitting a bid; however, only those prospective respondents who elect to return this form will receive addenda, if issued, and/or other information pertaining to this solicitation.

Name of Firm: _____

Firm Representative: _____ Title: _____

Telephone: _____ Fax: _____

Email (required): _____

Address: _____

City: _____ State: _____ Zip: _____

When completed, please email, fax or mail this form to the following contact:

City of Rio Rancho
Department of Finance Services, Purchasing Division
Attention: Matthew Schimmel
3200 Civic Center Circle NE, STE 300
Rio Rancho, NM 87144
Telephone: (505) 891-5064
Fax: (505) 891-5762
mschimmel@rrnm.gov

CITY OF RIO RANCHO
DEPARTMENT OF FINANCIAL SERVICES
IFB 21-PW-003
MEADOWLARK LANE PEDESTRIAN PATH RECONSTRUCTION

NOTICE TO CONTRACTORS

1. **Statement of Scope of Work**
The City of Rio Rancho is requesting formal bids for removal of the existing 12' wide asphalt pedestrian path on Meadowlark Lane, from approximately NM528 to Eileen Road, replacing it in the same footprint, with 4" thick concrete and removing and replacing three sidewalk culverts. This project will also include constructing approximately 1000 L.F. of new 5' wide sidewalk with two new ADA compliant curb ramps from Eileen Road to Sara Road.

This project is partially funded by the New Mexico Department of Transportation (NMDOT); therefore, the City of Rio Rancho and the awarded contractor must comply with all State requirements.

Vendor shall submit working red line drawings/As-Builts, following the format and method stated in the Development Process Manual (DPM) Chapter II.7 Revised for Public Works (Attached), to the Project Manager or Project Inspector on a monthly basis in order to obtain payment.

In addition, as part of the Final Record Drawings, a permanent erosion/sediment control plan must be submitted to the Development Services Department (DSD) Engineering Division. The permanent erosion/sediment control plan must include grading and drainage information.

2. **Standard Specifications**
The Standard Specifications for the Project are the New Mexico State Department of Transportation Standard Specifications for Highway and Bridge Construction, 2014 Edition, as amended and published by the New Mexico State Department of Transportation; New Mexico Standard Specifications for Public Works Construction, Current Edition, as amended and published by the New Mexico Chapter of the American Public Works Association, as well as latest modifications to various NMAPWA Sections per City of Rio Rancho that can be accessed online at: https://rrnm.gov/530/WaterandWastewater-Standard-Details; and the City of Rio Rancho Standard Details for Streets & Drainage. Copies of the Standard Specifications for Highway and Bridge Construction may be obtained online at: http://dot.state.nm.us/content/nmdot/en/Standards.html. Copies of the City of Rio Rancho Standard Details and Specifications for Streets & Drainage may be obtained online at: http://www.rrnm.gov/DesignStandards. The order of precedent for dealing with conflicts will be as follows: Addenda, Required Documents for Bid Submittal, Notice to Contractors, Invitation for Bids, Special Provisions, Construction Plans (other than Standard Drawings),

Supplemental Specifications, City or Rio Rancho Standard Specifications, New Mexico Department of Transportation Specifications, American Public Works Association Specifications, City of Rio Rancho Standard Drawings, New Mexico Department of Transportation Standard Drawings.

3. **Project Schedule**
   a. Legal Advertisement: July 13, 2020
   b. Pre-Bid scheduled: July 16, 2020 at 9:00 AM
   c. Question Deadline: July 20,2020 by 5:00 PM
   d. Addendum Deadline: July 23, 2020
   e. Emailed Bid Submission Deadline: July 30, 2020 by 10:00 AM
   f. Mailed Original Bid Submission Deadline: August 4, 2020

4. **Requirement of Vendor Registration with City of Rio Rancho Purchasing Office**
   The awarded vendor must have a current registration with the City of Rio Rancho for the Purchasing Office to issue a Purchase Order on any project. If the Bidder is not currently registered, a completed Vendor Registration Form and W9 must be filled out and submitted to the Purchasing Office. Contractors can find these forms and additional information regarding Vendor Registration at the following web address: http://www.rrnm.gov/bids. Contractors may also contact the Purchasing Office to check their vendor registration status.

5. **Determination of Notice to Proceed Date**
   Determination of the Notice to Proceed date is at the City of Rio Rancho's sole discretion.

6. **Americans with Disabilities Act (ADA) Compliance**
   All Americans with Disabilities Act (ADA) Construction Inspection forms must be completed and delivered to the Project Inspector and Project Manager prior to request for payment on these items.

7. **Public Notice and Communication Requirements**
   Acquisition and completion of any items required by the selected Classification Projects below are incidental to the project and no payment will be made to the contractor. Any signage listed in the Classification Projects below is for public notification and is not considered a Traffic Control Device or Traffic Control.

Classification B

Moderate level of communication will include: verbal, written (door hangers), message boards, signage, website, and social media.

Verbal Communication: When a project is in the early stages, design or inception, and throughout construction, contact should be made with residents and businesses affected in order to establish a relationship and inform them about the upcoming project, progress, and delays. Those residents or businesses affected by the project may choose to be added to the log of stakeholders to receive updates about the project as it progresses.

Written Communication: This communication type shall be used during construction on each project portion or line segment that affects public access or utilities. Written communication shall include the delivery of door hangers, letters, or both to the public no less than two (2) weeks before construction activities begin, start of, or as work progresses. The determination as to which media is best suited to the project under construction will be determined by the Project Manager.

Emails to those who have requested to be added to the stakeholders log regarding updates about the project throughout construction should also be utilized. Any and all correction notices regarding previously provided information that is now incorrect or delayed to the affected party shall be provided if construction or utility impairment does not start within 48 hours of the proposed start date.

Door Hangers: When a resident's or business' property, access, etc. is being specifically targeted for improvement or improvements are occurring where the resident's or business' property is negatively affected due to access limitations or utility outages. Contractors will use either the City of Rio Rancho's Capital Project Door Hanger Template (using Avery 16150 Template), the City of Rio Rancho's Maintenance Project Door Hanger Template (using Avery 16150 Template), or the City of Rio Rancho's GB Maintenance Project Door Hanger Template (using Avery 16150 Template) as determined by the Project Manager.

A. Door hangers and letters will state:
    1. City's Project Manager's name, email, and telephone number;
    2. Contractor's name, address, and local telephone number;
    3. Nature of work to be completed;
    4. Disruptions that resident or business might expect;
    5. Expected duration of construction;
    6. Contractor's local telephone number to which complaints can be made during normal working hours; and Contractor's local telephone number to which Emergency conditions can be reported during non-working hours.

Message Boards/Signage: Visual/automated message boards shall be used for this project and located where the work will take place. These message boards shall be displayed at least two (2) weeks before the construction project start date and inform the stakeholders of the upcoming project.

Special signage should be displayed before the construction project start date. Premade signage should be displayed to inform stakeholders of the work being completed in their neighborhood. Contractors will use the City of Rio Rancho's Public Coordination Premade Signage Information and corresponding template or the City of Rio Rancho's Public Coordination GO Bond Premade Signage Information and corresponding template as determined by the Project Manager.

Special Notices: These notices will serve as an additional reminder to inform residents and businesses personally and by written notice (door hangers or letters) that access to their property or utility services will be impaired or similar. This written communication shall restate the schedule of such impairment, with reference to the previous notifications of such

impairment. These notices will include the same information as outlined above and will be delivered seven (7) calendar days in advance of the scheduled impairment.

A. Notice Delivery:

1. Hand deliver to each resident and business adjacent to or which may be reasonably expected to be affected by impairment

8. <u>Business Notification Requirement for Access Change</u>

Contractor shall notify any or all affected businesses by written communication at least seven (7) calendar days in advance of any construction activities beginning, and as changes to the access of the businesses are made which may impact their business operation. Contractor must keep records to prove that each business was notified within the specified time and provide written proof to the City monthly. In the event that a business is not notified within the specified time, a fee will be charged pursuant to Rio Rancho Municipal Code, Chapter 96.08 (B)(8).The total fee amount will be kept as a running total and will be deducted from the final amount due to the Contractor at the time of the final pay application and will be reconciled based on the documentation agreed upon by both the City and Contractor.

9. <u>Property Owner Access</u>

The Contractor shall be solely responsible for maintaining access to those properties whose primary access is on Meadowlark Lane from NM528 to Sara Road. This access shall be maintained regardless of closure status.

10. <u>Mobilization</u>

If the Contractor's Bid Item Price for mobilization is equal to or less than 10% of the Total Original Contract Amount less mobilization, the City will pay the Contractor using the following procedure:

1. If the Contractor has performed Work representing less than 5% of the Total Original Contract Amount less mobilization, the City will pay 25% of the Mobilization bid amount;

2. If the Contractor has performed Work representing from 5% to less than 10% of the Total Original Contract Amount less mobilization, the City will pay 50% of the Bid Item Price for mobilization; and

3. If the Contractor has performed Work representing 10% or more of the Total Original Contract Amount less mobilization, the City will pay 100% of the Bid Item Price for mobilization.

If the Contractor's Bid Item price for mobilization is greater than 10% of the Total Original Contract Amount less mobilization, the City will only apply the previous payment procedure to that portion of the Contractor's Bid Item Price for mobilization equal to 10% of the Total Original Contract Amount less mobilization. The City will pay the Contractor the remainder of the Bid Item Price for mobilization upon completion of the Work.

Basis of Payment

Pay Item	**Pay Unit**
Mobilization	*Lump Sum*

The City will not make additional payments for demobilization and remobilization due to shutdowns or suspensions of the Work, or for other mobilization activities required for satisfactory completion of the Contract.

11. Traffic Control

The Contractor shall submit, a minimum of five (5) business days prior to the requested commencement of construction in the area affected, a detailed Traffic Control Plan to the City's Traffic Section, and a copy to the designated Project Manager for review and approval by the City. If the Traffic Control Plan will include closing access off to Residents or Businesses, or is to address a utility impairment; then the Public Notice and Communication Requirements project Classification will supersede the above minimum notification. In the event of an emergency situation, the Traffic Control Plan shall be submitted as soon as possible with documentation of the emergency. Traffic Control Plans shall conform to the City Ordinance Chapter 96: Use of Public Right-of-Way. The City of Rio Rancho Capital Improvement Right-of-Way Permit can be obtained at: https://www.rrnm.gov/CIPROW.

Traffic Control Log Book must be maintained throughout project duration, and submitted to the City of Rio Rancho at the project closeout. The log book will also be provided to the City Inspectors for biweekly review and hard copies.

A signature sample from the Traffic Control Supervisor is required before commencement of construction. If the Traffic Control Supervisor changes during construction, a new signature sample of the new Traffic Control Supervisor is required before work can continue.

All existing signs need to be recorded/tracked in Existing Permanent Signing Log, even if they will not be removed, covered, or relocated.

12. Material Testing and Quality Control for New Mexico Department of Transportation (NMDOT) Specification Items

Quality Control Contractor Testing shall comply with the NMDOT Minimum Testing Requirements for NMDOT Bid Items. The Contractor's Testing lab shall be independent of the testing lab performing Quality Assurance testing on behalf of the owner per the NMDOT Minimum Testing Requirements Table. All material incorporated but not limited to subgrade, asphalt, base course, concrete, backfill, pipe, and utility backfill shall be tested. A copy of the NMDOT Minimum Testing Requirements can be obtained at: https://www.rrnm.gov/VendorForms.

13. Utility Coordination Allowance

The City will utilize Supplemental Condition - SC 12.3.F of the Standard General Conditions of the Construction Contract prepared by the Engineer's Joint Contract Documents Committee (EJCDC) for this item.

14. Construction Staking and Record/As-Built Construction Drawings

The Contractor shall furnish all construction staking and surveys required to construct the project in accordance with the bearings, distances, and coordinate points specified in the drawings. The Contractor shall be responsible for furnishing the OWNER with as-built survey information/record documents for construction work performed per Chapter II.7 of the City of Rio Rancho's Development Process Manual (DPM) Revised for Public Works and the Supplementary Conditions 4.05.B. As-built survey information/record documents shall be considered incidental to the project and no separate payment shall be made thereof.

15. Construction Water Meter

Construction water meters shall be obtained by the Contractor from the City of Rio Rancho Utility Department - Customer Services Division. Acquisition of the water meter and cost of water will be incidental to the project.

16. Other

Access for residences, businesses and churches shall remain open and maintained at all times.

17. Project Closeout

The Contractor shall represent the faithful final completion of the work, including but not limited to correction of incomplete or deficient items identified in the final inspection; final cleaning and removal of temporary facilities and controls; preparation and delivery of operation and maintenance manuals, record drawings, and other project records and documents; completion of all required demonstrations and training; completion of all close-out submittals; and all other close-out procedures and requirements, if any, required for the Project. The construction close-out submittals shall be in accordance with the City of Rio Rancho Development Process Manual Volume II, Chapter 7, Section 2.

Final Payment Application shall contain the following: Evidence of Completed Operations Insurance, Consent of the Surety to Final Payment, Certificate of Payment of Claims, Release of Liens (General and Sub-Contractors), Affidavit of Wages Paid, Copy of Certification of Substantial Completion, and Copy of Certificate of Final Completion. Final payment may not be made if lacking the aforementioned required documents. The documents required to close-out the project shall be incidental to the project and shall not be included in the schedule of values. The Contractor shall represent the faithful final completion of the work, including but not limited to correction of incomplete or deficient items identified in the final inspection; final cleaning and removal of temporary facilities and controls; preparation and delivery of operation and maintenance manuals, record drawings, and other project records and documents; completion of all required demonstrations and training; completion of all close-out submittals; and all other close-out procedures and requirements, if any, required for the Project.

SUPPLEMENTAL CONDITIONS

These Supplemental Conditions amend or supplement the Standard General Conditions of the Construction Contract (EJCDC C-700) (2007) and other provisions of the Contract Documents as indicated below. All provisions, which are not so amended or supplemented, remain in full force and effect.

SC 1.01.A.2 Agreement:

At the end of the sentence, add the following:

also referred to as Contract

SC 1.01 Defined Terms

Delete Section 1.01.A.12 in its entirety and substitute the following:

12. *Contract Documents*—Those items so designated in the Agreement, including, printed, hardcopies, and electronic versions of the items listed in the Agreement are Contract Documents. Approved Shop Drawings, other Contractor's submittals, and the reports and drawings of subsurface and physical conditions are not Contract Documents.

Delete 1.01.29 in its entirety and substitute the following:

29. *Owner*—The City of Rio Rancho.

Delete Section 1.01.A.32 in its entirety and substitute the following:

32. *Progress Schedule*—The Baseline Schedule that is revised or modified during Application for Payment by Contractor.

At the end of subsection 1.01A, add the following:

52. Baseline Schedule—A fixed Project schedule developed by Contractor utilizing the critical path method that is the standard by which Project performance is measured.

SC 2.01 Delivery of Bonds and Evidence of Insurance

Add the following:

"Contractor shall also deliver simultaneously with the Agreement copies of certificates of insurance in accordance with Section 5.03 of the General Conditions."

SC 2.05 Before Starting Construction

Delete Section 2.05.A.1 in its entirety and substitute the following:

1. Baseline Schedule. The Engineer and Owner will notify Contractor in writing within ten (10) Days of the submittal of a Baseline Schedule if the schedule is "Accepted," "Accepted as noted," or is "rejected." Unless otherwise specified in the Contract, Contractor is wholly and solely responsible for construction means, methods or techniques, therefore the Engineer's and Owner's review of the Baseline Schedule will be for compliance with the Specifications and Contract requirements. Acceptance by the Engineer and Owner shall not relieve Contractor of any of its responsibilities for the accuracy or feasibility of the schedule. Any Baseline Schedule which alters Contract Time shall be deemed "rejected." In no event, may approval of a Baseline Schedule revise the Contract Documents, including Contract Time, unless accompanied by a related Change Order. Contractor shall not commence Work until the Engineer and Owner accepts a Baseline Schedule.

The Engineer and Owner will use the Baseline Schedule to establish major construction operations, to determine Contract Time extensions, and to measure the progress of the Work. Contractor shall be responsible for assuring all Work, including all Subcontractor Work, is included in the Baseline Schedule. Contractor shall be responsible for assuring that all Work sequences are logical and that the Baseline Schedule indicates a coordinated plan. Failure by Contractor to include any element of Work required for performance of the Contract shall not excuse Contractor from completing all Work within the required time.

For Baseline Schedules that are "rejected", the Engineer and Owner shall communicate, in writing, to Contractor all portions of the schedule that are not in compliance with the Contract requirements. Contractor shall, within seven (7) Days of receipt of the reasons for rejection of the schedule, provide a new Baseline Schedule and all additional information necessary for the Engineer and Owner to "Accept" the Baseline Schedule. The Engineer and Owner will notify Contractor in writing within seven (7) Days of the submittal of the corrected Baseline Schedule if the schedule is "Accepted," "Accepted as noted," or is "rejected." Contractor's failure to provide a timely and acceptable new Baseline Schedule in response to a rejected schedule waives any Claim the basis of which would have been documented by an acceptable Baseline Schedule.

Contractor shall provide a Baseline Schedule which clearly describes the following:

1. A reasonable and workable plan to complete the Work within the Contract Time;
2. The order and relationships of construction activities and the sequence of the Work;
3. Construction activities in a format prescribed by the Engineer and Owner so the Engineer and Owner can readily identify the Work and measure the progress of each construction activity;
4. The Project's critical path;

5. The milestones or other key dates specified in the Contract; and;
6. Logic diagrams.

The Baseline Schedule shall consist of network diagrams and associated bar graphs and shall include a tabulation of each activity shown on the detailed network diagrams. Provide, at a minimum, the following information on the Baseline Schedule:

1. Construction activity description;
2. Early start date (each activity);
3. Late start date (each activity);
4. Original duration, in workdays (each activity);
5. Total float and free float (each activity);
6. Sequence and interdependence of activities;
7. Workdays each week;
8. Contractor designated holidays;
9. Number of shifts per Day;
10. Number of hours per shift;
11. Scheduled Completion Date;
12. Anticipated weather events based on historical data; and
13. Resource Loading.

The Baseline Schedule shall include a report of projected Project completion measured in dollars and time. Float contained in the Baseline Schedule is not for the exclusive use or benefit of either the Owner or Contractor.

Contractor shall prepare and submit one (1) electronic copy and two (2) time-scaled color prints of the Baseline Schedule, using a Project scheduling software as directed by the Engineer and Owner that includes the following features:

1. Display the schedule as a Gantt chart;
2. Clearly display the critical path of scheduled construction activities apart from the noncritical scheduled construction activities;
3. Calculate and display total float and free float for each construction activity;
4. Clearly display the early start, late start, early finish and late finish dates for each construction activity; and,
5. Ability to easily store and transfer the schedule as a file (or files) from one computer to another.

SC 2.07 Initial Acceptance of Schedules

<u>Delete Section 2.07.A.1 in its entirety and add Section 2.08</u>

2.08 Contractor shall submit an updated Baseline Schedule, the Progress Schedule, monthly a minimum of five (5) Days before the Application of Payment. Failure by Contractor to submit the Application for Payment is non-conformance and the Progress Payment shall be withheld until a Progress Schedule is submitted.

Each construction activity in a monthly or revised schedule shall contain the same information required for the Baseline Schedule. Contractor shall include in the schedule a report of projected percent complete, measured in dollars and time. An acceptable schedule shall conform to Section 2.05.A.1 hereof. In no event may acceptance of a schedule revise the Contract Documents, including Contract Time, unless accompanied by a related Change Order. Any monthly or revised schedule which alters Contract Time shall be deemed rejected.

Float contained in the Progress Schedule is not for the exclusive use or benefit of either the Owner or Contractor, except as follows: float generated on critical path construction activities due to the acceleration of Contractor's performance, at the written direction of the Engineer and Owner, shall be for the exclusive use of the Owner; and, float generated on critical path construction activities due to the reduction or elimination of items shall be for the exclusive use of the Owner.

The Engineer and Owner may grant time extensions only to the extent that the construction activities on the critical path of the Progress Schedule in effect at the time of the delay are impacted.

SC 3.03 Reporting and Resolving Discrepancies

Add the following Subsection:

3.03.B.2 Any conflict, error, ambiguity, or discrepancy amongst the following portions of the Contract Documents shall be resolved by giving precedence in the following order: Addenda, Construction Plans other than Standard Drawings, Supplemental Specifications other than Standard Specifications.

SC 4.02.A.1.a Reports and Drawings

Add the following:

If Applicable (E.g. GEO-TESTING REPORTS)

SC 4.05 Reference Points:

Delete Section 4.05 in its entirety and substitute the following:

SECTION 4.05 SURVEYING

4.05.A Surveys by Owners

4.05.A.1 Owner reserves the right to perform any other surveys Owner deems necessary, including but not limited to surveys to verify pay

quantities, construction staking by Contractor and conformance of constructed improvements with the lines, grades, locations and elevations shown on the plans. Performance or non-performance of such surveys by Owner shall not relieve Contractor of Contractor's responsibility to construct improvements in accordance with the lines, grades, locations, and elevations shown on the plans.

4.05.B Surveys by Contractor

4.05.B.1 Contractor shall furnish all construction staking and surveys required to construct the proposed improvements in accordance with the lines, grades, locations and elevations shown on the plans.

4.05.B.2 Contractor shall furnish any reconnaissance surveys necessary to "pothole" and record the locations of existing utilities shown on the plans, indicated by utility locators and/or encountered during construction.

4.05.B.3 Contractor shall furnish any surveys required to support quantities for payment requests. Such surveys and quantity determinations shall be subject to review and approval or rejection by ENGINEER.

4.05.B.4 Contractor shall furnish as-built survey information for all improvements.

4.05.B.5 Contractor shall furnish to ENGINEER two (2) copies of all survey notes and cut sheets. Contractor shall furnish as-built survey information and existing utility location information in the form of redlines markups on the project record plans. Receipt or non-receipt of such information by ENGINEER shall not obligate Owner or ENGINEER in any manner nor relieve Contractor of Contractor's responsibility to construct all improvements in accordance with the lines, grades, locations and elevations shown on the plans.

4.05.B.6 Throughout construction of the Project, Contractor shall maintain a record set of project construction plans on which Contractor shall record the horizontal and vertical locations of constructed improvements and existing utilities encountered during construction, plan changes and other pertinent information. The record project construction plans shall be available at the project for review by ENGINEER at all times and shall be provided to ENGINEER upon completion of construction.

4.05.C Preservation of Survey Monuments, Points and Staking

4.05.C.1 Contractor shall be responsible for the preservation of any and all existing survey monuments.

Contractor shall notify ENGINEER not less than seven (7) calendar days prior to starting work in order that ENGINEER may take necessary measures to reference the location or ensure the preservation of survey monuments. Contractor shall not disturb permanent survey monuments without the consent of ENGINEER and shall notify ENGINEER and bear the expense of replacing any that may be disturbed without permission. Only Owner shall do replacement. When a change is made in the finished elevation of the pavement of any roadway in which a permanent survey monument is located, Contractor shall, at his own expense, adjust the monument cover to the new grade unless otherwise specified.

4.05.C.2 Contractor shall be responsible for the preservation of any and all right-of ¬way boundary points, and control points furnished by Owner. Contractor shall not disturb any points furnished by Owner without the written consent of ENGINEER and shall notify ENGINEER and bear the expense of replacing any that may be disturbed without permission. Only Owner shall do replacement of points furnished by Owner. The cost of replacement shall be charged against Contractor and shall be deducted from payment due Contractor for the work. Contractor shall be responsible for any mistakes or delays that may be caused by loss or disturbance of points furnished by Owner.

4.05.C.3 Contractor shall be responsible for the preservation of all construction staking furnished by Contractor and shall notify ENGINEER and bear the expense of replacing any that may be disturbed. Contractor shall be responsible for any mistakes or delays that may be caused by loss or disturbance of staking furnished by Contractor.

4.05.D Discrepancies

4.05.D.1 Contractor and ENGINEER shall notify each other immediately upon the discovery of any discrepancies in the plans, surveys, or staking. ENGINEER, in consultation with Contractor, shall promptly review the discrepancies and issue corrections or clarifications. If Contractor elects to proceed with construction before such corrections or clarifications are made, Contractor shall do so at Contractor's own risk and expense.

4.05.E Measurement and Payment

4.05.E.1 All Construction surveys furnished by Contractor, as required by the Supplementary Conditions, shall be included in the lump sum bid, or shall be considered incidental to the contract price.

SC 5.04 Contractor's Liability Insurance:

The limits of liability for the insurance required by Paragraph 5.04 of the General Conditions shall provide the following coverages for not less than the following amounts or greater where required by Laws and Regulations.

SC 5.04.A.1 & **5.04.A.2 Worker's Compensation**, etc. under Paragraph **5.04.A.1** and **5.04.A2** of the General Conditions:

(1) State:	Statutory
(2) Applicable Federal (e.g., Longshoreman's):	Statutory
(3) Employer's Liability:	$1,000,000

SC 5.04.A.3, 5.0.4.A.4 & **5.04.A.5**, and **5.04.B.3** Contractor's Liability Insurance under Paragraphs **5.04.A.3**, **5.04.A.4**, **5.04.A.5**, and **5.04.B.3** of the General Conditions which shall also include completed operations and product liability coverages and eliminate the exclusion with respect to property under the care, custody and control of Contractor:

(1) General Aggregate (Except Products-Completed Operations)	$1,000,000
(2) Products-Completed Operations Aggregate	$1,000,000
(3) Personal and Advertising Injury (Per Person/Organization)	$1,000,000
(4) Each Occurrence (Bodily Injury and Property Damage)	$1,000,000
(5) Property Damage liability insurance will provide Explosion, Collapse and Underground coverages where applicable.	
(6) Excess Liability	
General Aggregate	$1,000,000
Each Occurrence	$500,000

SC 5.04.A.6 Automobile Liability Insurance shall include coverage for all owned, non-owned and hired vehicles:

(1) Bodily Injury:	Each Person $1,000,000
	Each Accident $1,000.00

Property Damage: Each Accident $1,000,000

Or

(2) Combined Single Limit (Bodily Injury and Property Damage):
Each Accident $1,000,000

SC 5.04.B.4 Contractual Endorsement

The Contractual liability coverage required by Paragraphs 6.11 and 6.20 of the General Conditions shall provide coverage for not less than the following amounts:

(1) General Aggregate $ 1,000,000
(2) Each Occurrence (Bodily Injury and Property Damage) $ 500,000

SC 5.04.B.7a Additional Insured:

Add the following:

"The City of Rio Rancho."

SC 5.05.A Additional Types and Amounts of Insurance Required by Owner:

None.

SC 5.06 Property Insurance:

Contractor shall purchase and maintain property insurance upon the Work at the site in the amount of the full replacement cost thereof. The requirements of Section 5.06 of the General Conditions shall remain unchanged except that Contractor is responsible for obtaining and maintaining said property insurance.

SC 5.06.A Additional Insured:

Add the following:

"The City of Rio Rancho"

SC 6.02 Labor; Hours Worked

Add the following Sections:

6.02.C.Sanitary Conveniences.

Contractor shall establish and maintain in a sanitary condition necessary sanitary facilities for use by Contractor's employees, Subcontractors, Suppliers and other Project personnel.

Sanitary facilities shall be screened from public view. Contractor shall strictly enforce use of sanitary facilities.

6.02.D.Certified Weekly Payroll Certificates.

Contractor and all subcontractors shall submit one certified copy of the project weekly payrolls to Owner, email is preferred, and one certified copy directly to the New Mexico Department of Workforce Solutions, not later than five (5) working days after the close of each payroll period. Contractor shall be responsible for the submission of copies of payrolls of all Subcontractors."

6.02.E State of New Mexico-Labor and Industrial Commission Labor Requirements.

6.02.E.1 The minimum wages to be paid the various classes of mechanics and laborers engaged by Contractor and Subcontractors for work under this contract including any additional, omitted or changed work, shall not be less than the amount as determined and established by the State Labor Commission as provided in Section 13-4-11, NMSA 1978, or the Federal wage rates, where applicable, and in full force and effect, without exception, on the date of the contract and during the lifetime of this contract.

6.02.E.2 Contractor and each of his Subcontractors shall pay each of his employees working under this contract in full, in cash, and not less than once a week, less all legally required deductions or withholdings. When circumstances are such that payment in cash is not feasible or is impractical, payment may be made by check, provided, however, that adequate funds to cover same are on deposit at the bank upon which the checks are drawn, and further that the checks may be cashed without charge, trace requirements or undue inconvenience to the payee.

6.02.E.3 The minimum wage rates, if any, specified for apprentices shall apply only to persons working with the tools of the trade that they are learning, and under the direct supervision of the Journeyman or master mechanics. Except as otherwise required by law, the number of apprentices in each trade or occupation employed by Contractor or any Subcontractor shall not exceed the number permitted by the applicable standard of the United States Department of Labor, or in the absence of such standards the number permitted under, the usual practice prevailing between trade unions and Employees Associated of the respective trades or occupations.

6.02.E.4 Extra Work - Minimum Wages: In case Owner orders Contractor to perform extra work or additional work which may make it necessary for Contractor or any Subcontractor under him, to employ in the

performance of such work, any person in any trade or occupation for which no minimum wage is specified, Owner will include the Contract Change Order for such extra or additional work the minimum wage rate for such trade or occupation, and insofar as such extra or additional work is concerned, there shall be paid each employee engaged in the work in such trade or occupation, not less than the minimum wage rate included.

6.02.E.5 Wage Underpayments and Adjustments: Contractor agrees that, in case of underpayment of wages to any worker on the project under this contract, that Owner may withhold out of payments due, an amount sufficient to pay such worker the difference between the wages required to be paid under this contract and the wages actually paid such worker for the total number of hours worked and that Owner may disburse such amount so withheld by it, for and on account of Contractor to the employee to which such amount is due. Contractor further agrees that the amounts to be withheld pursuant to this paragraph may be in addition to the percentages to be retained by Owner pursuant to other provisions of this contract. A copy of the New Mexico State Office of Labor Commission Minimum Wage Rates and Apprentices minimum wage scales in effect at the time of this contract shall be posted or otherwise made available to Contractor's employees at all times on the job.

SC 6.02.F Affirmative Action/Equal Employment Opportunity and Non-Discrimination

Contractor shall not discriminate against any employee or applicant for employment because of race, color, religion, sex, age, national origin or ancestry, or physical or mental handicap. Contractor will take affirmative action to ensure that applicants for employment are employed, and that employees are treated during employment, without regard to their race, color, religion, sex, age, national origin or ancestry, physical or mental handicap. Such action shall include but not be limited to the following: employment, upgrading, demotion, transfer, recruitment, recruitment advertising, layoff, termination, disciplinary actions and grievances, rates of pay or other forms of compensation, other terms and conditions of employment and selection for training, including apprenticeship. Contractor shall include the provisions of this Paragraph in every Subcontract or purchase order so that such provisions shall be binding upon every Subcontractor.

SC 6.04 Progress Schedule

Delete reference to Paragraph 2.07 in Section 6.04 in its entirety and replace with Paragraph 2.08.

SC 6.05.A Substitutes and "Or –Equals"

<u>Delete Section 6.05.A in its entirety and substitute the following</u>:

Whenever an item of material or equipment is specified or described in the Contract Documents by using the name of a proprietary item or brand name, or the name of a Supplier, the specification or description is intended to establish the particular type, function, appearance, and quality required. Unless the specification or description contains or is followed by the words reading that a like, equivalent, or "or-equal" item or substitute is permitted, other items of material or equipment or materials or equipment of other Suppliers may not be submitted to Engineer for review. In the event the specification or description does contain or is followed by the words reading that a like, equivalent, or "or-equal" item or substitute is permitted, such "or-equal" items or substitute may be submitted to the Engineer for review under the circumstances described below.

SC 6.10 Taxes

Add the following Subsection:

6.10.B.1 GROSS RECEIPTS SURETY. Contractor's attention is called to the requirements of a gross receipts surety bond as may be required by the State of New Mexico Bureau of Revenue. It shall be Contractor's responsibility to ascertain if he is required to purchase a bond or not, and as such will be wholly responsible for all costs so incurred and without cost to Owner.

SC 6.16 Emergencies.

Add the following Subsection:

6.16.B Contractor shall designate at least one responsible employee to represent him in case of an emergency. Such employee, or employees, shall have a local telephone at which he may be reached at any hour of the day or night. Directions for contacting such employee shall be given to the Rio Rancho Police Department, and Owner and ENGINEER.

SC 6.17 Shop Drawings and Samples

Add the following Subsection:

6.17.1 Traffic Control Plan

Contractor shall prepare a Traffic Control Plan for all areas where construction activities will occur within or immediately adjacent to the public right-of-way. This Traffic Control Plan will be submitted to the ENGINEER for review. Contractor must obtain the ENGINEER's written approval of the Traffic Control Plan prior to the beginning of construction activities in the affected areas. Approval of the Traffic Control Plan by the ENGINEER shall not relieve Contractor of any liability arising from the design or maintenance of all traffic control devices. Traffic control

devices shall be maintained by Contractor in good working order at all times during the construction period, until such time as the work is completed and permanent access control items such as fences, barrier rails and gates have been installed. The Traffic Control Plan shall conform to the standards set forth in the Manual on Uniform Traffic Control Devices (MUTCD), latest edition."

SC 6.19 Contractor's General Warranty and Guarantee:

Add the following Subsection:

6.19.D After the approval of final payment and prior to the expiration of one (1) year after the date of Substantial Completion or such longer period of time as may be prescribed by law or by the terms of any applicable special guarantee required by the Contract Documents, if any work is found to be defective, Contractor shall promptly, without cost to Owner and in accordance with Owner's written instruction, either correct such defective work or, if it has been rejected by Owner, remove it from the site and replace it with non-defective work. Contractor shall also reimburse Owner for the cost of any reasonable testing or exploratory work conducted to verify the limits of the defective work. If Contractor does not promptly comply with the terms of such instructions, Owner may have the defective work removed and replaced and all direct and indirect cost of such removal and replacement, including compensation for additional professional services, shall be paid by Contractor.

SC 11.01 Cost of the Work

Delete Section 11.01.A.5.c in its entirety and substitute the following:

"Rentals of all construction equipment and machinery, and the parts thereof whether rented from Contractor or others in accordance with rental agreements approved by Owner with the advice of Engineer, and the costs of transportation, loading, unloading, assembly, dismantling, and removal thereof. All such cost of rentals of all construction equipment and machinery shall be determined in accordance with the nationally accepted equipment rental rates as amended from time to time. The rental of any such equipment, machinery, or parts shall cease when the use thereof is no longer necessary of the Work."

SC 11.02 Allowances

Add the following Subsection:

11.02.E Lump Sum Allowances specified in the Contract Documents have been established for one or more of the following reasons: to cover unanticipated costs (contingencies); in lieu of additional scope requirements and design specifications, and/or to defer the selection

of materials and equipment to a later date when additional information is available to Owner; for materials testing, and/or quality control and quality assurance; for the location and/or relocation of existing utilities; and for SWPPP preparation and implementation. Any and all work performed under allowance items shall be authorized at the sole discretion of Owner prior to being undertaken and the amount of compensation thereof will be based on the reasonable costs incurred by Contractor in performing such work (determined as provided in Paragraph 11.01) and may include a Contractor's fee for overhead and profit (determined as provided in Paragraph 12.01.C). "The following equipment rates shall be used in determining the cost of rental construction equipment and machinery in accordance with SC 11.01.c:

11.02.F Unit Price Allowances specified in the Contract Documents shall be authorized at the sole discretion of Owner prior to being undertaken and the amount of compensation thereof for Unit Price Work shall be determined as provided in Paragraph 11.03

SC 12.01 Change of Contract Price

Delete Section 12.01.B.2 in its entirety and substitute the following:

12.01.B.2 Where the Work involved is not covered by unit prices contained in the Contract Documents, by a mutually agreed lump sum (which may include an allowance for overhead and profit determined in accordance with Paragraph 12.01.C.2). Change orders involving a reduction in the Contract Price shall include itemized amounts representing Contractor's fee for overhead and profit deducted as determined in accordance with Paragraph 12.01.C.2.

SC 12.03 Delays

Delete Sections 12.03.A, B and C in their entirety and substitute the following:

A. Where Contractor is prevented from completing any part of the Work within the Contract Times due to delay beyond the control of Contractor, the Contract Times will be extended in an amount equal to the time lost due to such delay if a Claim is made therefor as provided in Paragraph 12.02.A. Delays beyond the control of Contractor shall include, but not be limited to, acts or neglect by Owner, or acts or neglect of other contractors performing other work as contemplated by Article 7, fires, floods, epidemics, abnormal weather conditions, or acts of God.

B. If Owner, Engineer, or other contractors performing other work for Owner as contemplated by Article 7, or anyone for whom Owner is responsible, delays, disrupts, or interferes with the performance or progress of the Work, then Contractor shall be entitled to an equitable

adjustment in the Contract Price or the Contract Times, or both. Contractor's entitlement to an adjustment of the Contract Times is conditioned on such adjustment being essential to Contractor's ability to complete the Work within the Contract Times.

C. If Contractor is delayed in the performance or progress of the Work by fire, flood, epidemic, abnormal weather conditions, acts of God, or other causes not the fault of and beyond control of Owner and Contractor, then Contractor shall be entitled to an equitable adjustment in Contract Times, if such adjustment is essential to Contractor's ability to complete the Work within the Contract Times. Such an adjustment shall be Contractor's sole and exclusive remedy for the delays described in this Paragraph 12.03.C.

Add the following subsections:

12.03.F Contractor shall be solely responsible for determining in advance of their construction operations, if any of the utility lines are in conflict with construction operations. Contractor shall be solely responsible for coordinating and scheduling with the appropriate utility owner to relocate the utility conflict. Payment for utility coordination and scheduling shall not exceed the amount provided for in the Bid Form labeled Utility Coordination Allowance. Contractor shall assume full and sole liability for schedule delays and/or cost overruns due to failed coordination and scheduling of relocations with utility companies. Contractor shall keep a detailed log of all utility coordination and scheduling activities.

12.03.G Contractor shall be liable for all amounts chargeable to Owner by third parties resulting from delays within Contractor's control, including but not limited to additional design and/or construction oversight expenses, and materials testing costs. Such amounts may be deducted from Contractor's Application for Payment either at the time the cost is incurred or from the final Application for Payment as decided by Owner. If the total amounts for which Contractor is liable under this subsection exceed the amounts due Contractor under the Contract, Contractor shall remit such excess to Owner within thirty (30) days after Substantial Completion.

SC 13.03 Tests and Inspections.

Add the following Subsection:

13.03.B.4 Contractor shall pay for all retesting due to the first test or subsequent tests failing to show results meeting specifications. If not previously deducted from progress payments, costs for such tests shall be deducted from the final payment of the contract.

13.03.G Job Mix Formula and Design Mixes. The preparation of job mix formulae and design mixes together with necessary sampling, and testing as required for this Contract shall be at Contractor's expense and at no cost to Owner. Such sampling and testing shall be performed by an approved testing laboratory under the supervision of a New Mexico Registered Professional Engineer. Mix, design and job mix formulae submittals shall state the methods used in preparing the designs for formulae together with substantiating data and graphic representations as appropriate, shall respond to all pertinent material requirements listed in the Technical Specifications and shall give recommendations for job procedures and job mix tolerance limits necessary to give reasonable assurances that the specification requirements will be met in the field, when appropriate.

13.03.H Materials or Manufactured Items Testing of materials or manufactured items shall be at Contractor's expense. Tests for materials or items manufactured within the State of New Mexico shall be certified as meeting contract specifications by an approved testing laboratory under the supervision of a New Mexico Registered Professional Engineer or a testing laboratory under the supervision of a professional engineer registered in the state of manufacture or a testing laboratory approved by the ENGINEER.

13.03.I Field Testing. The field testing of all locally processed or produced material directly incorporated into the work, including the establishment of density curves representative of materials to be used in subgrade and backfilling operations and concrete, and compliance tests will be provided by Contractor except as provided in Section 13.03 of the General Conditions or in the Technical Specifications for certain materials and tests. ENGINEER shall determine the number, type, and location of tests. Contractor shall furnish, incidental to this Contract, necessary equipment, tools, and labor, except testing equipment, to assist the testing agency in the performance of field tests. Copies of all laboratory and field tests shall be forwarded to ENGINEER, Contractor and Owner. Contractor shall submit invoices from materials testing firm and other information at the request of Owner substantiating reimbursement under the Allowance for Materials Testing and Contractor Quality Control.

13.03.J Contractor shall, and shall cause his Subcontractor(s) to protect carefully his and their work and materials against damage or injury from the weather. If, in the opinion of the ENGINEER, any work or materials shall have been damaged or injured by reason of failure on the part of Contractor or any of his Subcontractors so to protect

his work, such materials, shall be removed and replaced at the expense of Contractor. Until Owner accepts the project, Contractor shall be responsible for protecting completed work, work in progress, equipment, materials and property from storm water, erosion, sediment, and related elements. Damage resulting from storm water, erosion, sediment, and related elements shall be Contractor's responsibility to replace, repair, or otherwise rectify."

SC 13.07 Correction Period

Add the following Subsection:

13.07.F The one year correction period shall begin upon Substantial Completion of the entire Work.

SC 14.01 Schedule of Values

Add the following Subsections:

14.01.B Close-Out Item

The documents required to close-out the project shall be incidental to the project and shall not be included in the schedule of values. The Contractor shall represent the faithful final completion of the work, including but not limited to correction of incomplete or deficient items identified in the final inspection; final cleaning and removal of temporary facilities and controls; preparation and delivery of operation and maintenance manuals, record drawings, and other project records and documents; completion of all required demonstrations and training; completion of all close-out submittals; and all other close-out procedures and requirements, if any, required for the Project. The construction close-out submittals shall be in accordance with the City of Rio Rancho Development Process Manual Volume II, Chapter 7, Section 2.

14.01.C Mobilization Item

Mobilization
If Contractor's Bid Item Price for mobilization is equal to or less than 10% of the Total Original Contract Amount less mobilization, the City will pay Contractor using the following procedure:

1. If Contractor has performed Work representing less than 5% of the Total Original Contract Amount less mobilization, the City will pay 25% of the mobilization bid amount;

2. If Contractor has performed Work representing from 5% to less than 10% of the Total Original Contract Amount less mobilization, the City will pay 50% of the Bid Item Price for mobilization; and

3. If Contractor has performed Work representing 10% or more of the Total Original Contract Amount less mobilization, the City will pay 100% of the Bid Item Price for mobilization.

   If Contractor's Bid Item price for mobilization is greater than 10% of the Total Original Contract Amount less mobilization, the City will only apply the previous payment procedure to that portion of Contractor's Bid Item Price for mobilization equal to 10% of the Total Original Contract Amount less mobilization. The City will pay Contractor the remainder of the Bid Item Price for mobilization upon completion of the Work.

   Basis of Payment

Pay Item	**Pay Unit**
Mobilization	*Lump Sum*

The City will not make additional payments for demobilization and remobilization due to shutdowns or suspensions of the Work, or for other mobilization activities required for satisfactory completion of the Contract.

SC 14.02.A.4 Progress Payments

Add the following Subsection:

14.02.A.4 Amounts ascertained as payable per Article 14 shall be paid to Contractor until such time as the sum of the progress payments equals ninety five (95%) of the Contract Price, as adjusted for by Change Orders. Thereafter, no additional progress payments shall be made until after faithful final completion of the Work, including but not limited to correction of incomplete or deficient items identified in the final inspection; final cleaning and removal of temporary facilities and controls; preparation and delivery of operation and maintenance manuals, record drawings, and other project records and documents; completion of all required demonstrations and training; completion of all close-out submittals; and all other close-out procedures and requirements, if any, required for the Project.

SC 14.06 Final Inspection

Add the following language:

14.06.A The Engineer, Owner, and Contractor will schedule and complete a Final Inspection of the Work within 14 days of Substantial Completion. During this Final Inspection, the Engineer and Owner will revise the tentative list of items to be completed or corrected, developed at Substantial Completion, and submit it to Contractor within 2 days of the Final Inspection.

Contractor shall remediate the incomplete or defective items identified during the Final Inspection, within 25 calendar of Substantial Completion Failure of Contractor to complete the punchlist within the 25 days will result in assessment of Liquidated Damages, per the Contract, until all the incomplete or defective items are completely remediated and accepted by the Engineer and Owner.

SC 14.07 Final Payment

Add the following language:

14.07.A.2e Contractor shall, within 14 days of obtaining approval that the list of incomplete or defective items is complete and has submitted all required documents per the Contract Documents, make application for final payment following the procedure for progress payments.

14.07.B If the Engineer rejects the Application for Final Payment to Contractor, then Contractor will resubmit the revised Application for Final Payment within 2 days or the assessment of Liquidated Damages will begin, per the Contract.

SC 15.02.A.1 Owner May Terminate for Cause

Delete reference to Paragraph 2.07 in Section 15.02.A.1 in its entirety and substitute it with Paragraph 2.08.

SC 16.01 Dispute Resolution:

Add the following Subsection:

16.01.D Any and all other references to arbitration in the Contract Documents shall be deleted.

SC 17.01 Giving Notice:

Add the following Subsections:

17.01.A.3 All notices, demands, requests, instructions, approvals, and proposals and claims must be in writing.

17.01.A.4 Any notice to or demand upon Contractor shall be sufficiently given if delivered at the office of Contractor stated on the signature page of the agreement (or an such other offices as Contractor may from time to time designate in writing to Owner), or if deposited in the United States mail in a sealed, postage-prepaid envelope, or delivered with charges prepaid to any telegraph company for transmission in each case addressed to such office.

17.01.A.5 All papers required to be delivered to Owner shall, unless otherwise specified in writing to Contractor, be delivered to the City of Rio Rancho, Department of Public Works, 3200 Civic Center Circle NE, Rio Rancho, New Mexico, 87144 and any notice to or demand upon Owner shall be sufficiently given if so delivered, or if mailed in the United States mail in a sealed, postage pre-paid envelope to City of Rio Rancho, Department of Public Works, 3200 Civic Center Circle NE, Rio Rancho, New Mexico 87144, or delivered with charges pre-paid to any telegraph company for transmission to the same at such address, or to other representatives of Owner or to such other address as Owner may subsequently specify in writing to Contractor for such purpose.

17.01.A.6 Any such notice shall be deemed to have been given as of the time of actual delivery or in the case of mailing, when the same should have been received in due course of post, or in the case of telegrams, at the time of actual receipt, as the case may be.

CONTRACT NUMBER
Construction Contract
Meadowlark Lane Pedestrian Path Reconstruction

THIS AGREEMENT is made and entered into by and between the City of Rio Rancho, hereinafter referred to as the "CITY," and CONTRACTOR NAME, hereinafter referred to as the "CONTRACTOR."

City and Contractor, in consideration of the mutual covenants hereinafter set forth, agree as follows:

1. **WORK**
   CONTRACTOR shall complete all Work as specified or indicated herebelow. The Work and project are generally described in Invitation for Bid IFB 21-PW-003.

2. **GENERAL CONDITIONS**
   The general conditions ("General Conditions") of this Agreement shall be the Standard General Conditions of the Construction Contract prepared by the Engineers Joint Contract Documents Committee (EJCDC) Document C-700, 2007, and modifications thereto incorporated herein by reference.

3. **ENGINEER**
   The ENGINEER of record for this project, as described in the General Conditions, is the City of Rio Rancho.

4. **CONTRACT TIMES**

   4.1 The Work will be substantially completed within **Thirty (30)** consecutive calendar days after the date when the Contract Times commence to run as provided in Paragraph 2.03 of the General Conditions, and completed and ready for final payment in accordance with Paragraph 14.07 of the General Conditions.

   4.2 Liquidated Damages. City and Contractor recognize that time is of the essence of this Agreement and that City will suffer financial loss if the Work is not completed within the times specified in Paragraph 4.1 above, plus any extensions thereof allowed in accordance with Article 12 of the General Conditions. The parties also recognize the delays, expense and difficulties involved in proving the actual loss suffered by City if the Work is not completed on time. Accordingly, instead of requiring any such proof, City and Contractor agree that as liquidated damages for delay (but not as a penalty) Contractor shall pay City **One Thousand dollars ($ 1,000.00)** for each day that expires after the substantial completion date established by the City's written Notice to Proceed.

5. CONTRACT PRICE

The City shall pay the Contractor the Contract Sum in current funds for the Contractor's performance of the Contract. The Contract price comprises the Base Bid described in IFB 21-PW-003 and all addenda thereto. The Contract price shall be **CONTRACT PRICE ($),** which excludes applicable gross receipts tax, subject to additions and deductions as provided in the Contract Documents.

6. NON-APPROPRIATIONS

The terms of this Agreement and all amounts payable hereunder are contingent upon sufficient appropriations therefore by the City's Governing Body. If sufficient appropriations are not made, the City shall notify the Contractor of the same, and this Agreement shall terminate forthwith.

7. PAYMENT PROCEDURES

Contractor shall submit Application for Payment in accordance with Article 14 of the General Conditions. Engineer will process applications for Payment as provided in the General Conditions. The City shall make progress payments on account of the Contract Price on the basis of Contractor's Applications for Payment as recommended by Engineer, twenty one (21) days after receipt of the Engineer approved Application for Payment. All such payments will be measured by the schedule of values established in Paragraph 14.02 of the General Conditions (and in the case of Unit Price Work based on the number of units completed).

8. CONTRACTOR'S REPRESENTATIONS

In order to induce City to enter into this Agreement Contractor makes the following representations:

8.1 Contractor has examined and carefully studied the Contract Documents and other related data identified in the Bidding Documents including "technical data."

8.2 Contractor has visited the site and become familiar with and is satisfied as to the general, local and site conditions that may affect cost, progress, performance or furnishing of the Work.

8.3 Contractor is familiar with and is satisfied as to all federal, state and local laws and regulations that may affect cost, progress, performance and furnishing of the Work.

8.4 Contractor has examined all reports of explorations and tests of subsurface conditions at or contiguous to the site and all drawings of physical conditions in or relating to existing surface or subsurface structures at or contiguous to the site (except underground facilities) which have been identified in Paragraph 4.02 A of the General Conditions. Contractor accepts the determination set forth in Paragraph 4.02 B of the General Conditions of the extent of the "technical data" contained in such reports

and drawings upon which Contractor is entitled to rely as provided in Paragraph 4.02 B.1 of the General Conditions. Contractor acknowledges that such reports and drawings are not Contract Documents and may not be complete for Contractor's purposes. Contractor acknowledges that City and Engineer do not assume responsibility for the accuracy or completeness of information and data shown or indicated in the Contract Documents with respect to Underground Facilities at or contiguous to the site. Contractor has obtained and carefully studied (or assumes responsibility for having done so) all such additional supplementary examinations, investigations, explorations, tests, studies and data concerning conditions (surface, subsurface and underground facilities) at or contiguous to the site or otherwise which may affect cost, progress, performance or furnishing of the Work or which relate to any aspect of the means, methods, techniques, sequences and procedures of construction to be employed by Contractor and safety precautions and programs incident thereto. Contractor does not consider that any additional examinations, investigations, explorations, tests, studies or data are necessary for the performance and furnishing of the Work at the contract price, within the contract times and in accordance with the other terms and conditions of the contract documents.

8.5 Contractor is aware of the general nature of work to be performed by City and others at the site that relates to the Work as indicated in the Contract Documents.

8.6 Contractor has correlated the information known to Contractor, information and observations obtained from visits to the site, reports and drawings identified in the Contract Documents and all additional examinations, investigations, explorations, tests, studies and data with the Contract Documents.

8.7 Contractor has given City written notice of all conflicts, errors, ambiguities or discrepancies that Contractor has discovered in the Contract Documents. Contractor certifies that any written resolution thereof by City is acceptable and that the Contract Documents are generally sufficient to indicate and convey understanding of all terms and conditions for performance and furnishing of the Work.

8.8 Contractor shall make prompt payment to its subcontractors and suppliers for amounts owed for work performed on the construction project within seven days after receipt of payment from the City. If Contractor fails to pay Contractor’s subcontractor and suppliers by first-class mail or hand delivery within seven days of receipt of payment, Contractor shall pay interest to Contractor’s subcontractors and suppliers beginning on the eight day after payment was due, computed at one and one-half percent of the undisputed amount per month or fraction of a month until payment is issued. These

payment provisions apply to all tiers of contractors, subcontractors and suppliers.

9. CONTRACT DOCUMENTS

In addition to this Agreement, the Contract Documents, which comprise the entire agreement between City and Contractor concerning the Work, consist of the documents which are appended to this Contract as listed below in Subsection 9A and the documents which formed part of the IFB package upon which Contractor made its successful bid, as listed below in Subsection 9B.

A. Documents attached to hereto:
   1. Contractor's Bid Form
   2. The Bidder's Listing of Subcontractors for Compliance with Subcontractors Fair Practices Act
   3. Bid Bond
   4. Local/Area/Resident/Resident Veteran/Recycled Content Goods Preference Certification Form
   5. Resident Veteran Preference Certification
   6. Certification of Bidder Regarding Affirmative Action/Equal Employment Opportunity and Non-discrimination
   7. Non-Collusion Affidavit
   8. Construction Performance Bond
   9. Labor and Materials Payment Bond
   10. Certificates of Insurance

B. Documents which were part of the IFB package and not listed above:
   1. Advertisement for Bids
   2. Instructions to Bidders
   3. Standard General Conditions of the Construction Contract, EJCDC Document No. C-700 (2007)
   4. Supplemental Conditions
   5. Notice to Contractor
   6. Wage Rate Determination
   7. Any Addenda issued for IFB 21-PW-003
   8. Construction Plans as prepared by the City of Rio Rancho

There are no Contract Documents other than those listed in Section 9 of this Agreement. The Contract Documents may only be amended, modified or supplemented as provided in Paragraphs 3.04 A & B, General Conditions. Any question regarding the documents which formed the IFB package shall be resolved by use of the documents maintained by City in its files on the Work. Contractor may obtain access to these documents at any time, upon reasonable notice.

10. MISCELLANEOUS

10.1 Terms used in this Agreement will have the same meaning as those defined in Article 1 of the General Conditions.

10.2 No assignment by a party hereto of any rights under or interests in the Contract Documents will be binding on another party hereto without the written consent of the party sought to be bound; and, specifically but without limitation, monies that may become due and monies that are due may not be assigned without such consent (except to the extent that the effect of this restriction may be limited by law), and unless specifically stated to the contrary in any written consent to an assignment, no assignment will release or discharge the assignor from any duty or responsibility under the Contract Documents.

10.3 The City and Contractor each binds themselves, their partners, successors, assigns and legal representatives to the other party hereto, in respect to all covenants, agreements and obligations contained in the Contract Documents.

10.4 Any provision or part of the Contract Documents held to be void or unenforceable under any Law or Regulation shall be deemed stricken, and all remaining provisions shall continue to be valid and binding upon the City and Contractor, who agree that the Contract Documents shall be reformed to replace such stricken provision or part thereof with a valid and enforceable provision that comes as close as possible to expressing the intention of the stricken provision.

10.5 If, through any cause, Contractor shall fail to fulfill in timely and proper manner Contractor's obligations under this Agreement, or if Contractor shall violate any of the covenants, agreements, or stipulations of this Agreement, the City shall thereupon have the right to terminate this Agreement by giving written notice to Contractor of such termination and specifying the effective date thereof, at least five (5) days prior to the effective date of such termination. In such event, all finished and/or unfinished documents, data, studies, surveys and reports prepared by Contractor under this Agreement shall, at the option of the City, become its property and Contractor shall be entitled to receive just and equitable compensation for any work satisfactorily completed hereunder.

10.6 Notwithstanding the above, Contractor shall not be relieved of liability to the City for damages sustained by the City by virtue of any breach of the contract by Contractor, and the City may withhold any payments to Contractor for the purpose of set-off until such time as the exact amount of damages due the City from Contractor is determined.

10.7 The City may terminate this Agreement at any time for the City's convenience, by giving at least thirty (30) days notice in writing to Contractor. If the Agreement is terminated by the City as provided herein, Contractor will be paid for the time provided and expenses incurred up to

the termination date. If this Agreement is terminated due to the fault of Contractor, paragraph 10.5 hereof relative to termination shall apply.

10.8 Notices: Any notice required or permitted to be given hereunder shall be sufficient if mailed to the address shown below or faxed to the number shown below for the party receiving notice, or to such other address or fax number of which such party has duly notified the other party in accordance with the provisions of this paragraph.

For notice to the City:
City of Rio Rancho
Bill Ladd, PM
3200 Civic Center Circle
Rio Rancho, New Mexico 87144

For notice to the Contractor:

10.9 To the extent, if at all, that NMSA § 56-7-1 is applicable to any agreement to indemnify contained in this Contract, and any such agreement to indemnify contained in this Contract is interpreted to indemnify a party against liability, claims, damages, losses, or expenses, including attorney fees, arising out of bodily injury to persons or damage to property caused by, or resulting from, in whole or in part the negligence, act, or omission of the indemnitee, or the agents or employees of the indemnitee, or any legal entity for whose negligence, acts, or omissions any of them may be liable, any such agreement to indemnify contained this Contract shall not extend to liability, claims, damages, losses, or expenses, including attorney fees, arising out of:

A. The preparation or approval of maps, drawings, opinions, reports, surveys, change orders, designs, or specifications by the indemnitee or the agents or employees of the indemnitee; or

B. giving or failure to give directions or instructions by the indemnitee, or the agents or employees of the indemnitee, where such giving or failure to give directions or instructions is the primary cause of bodily injury to persons or damage to property.

10.10 Where documents listed in Section 9 contain terms that are different from City Ordinances, City Ordinances shall prevail. In that regard, any inconsistency between terms occurring among the following portions of this Agreement shall be resolved by giving precedence in the following order: (1) City Ordinances, (2) this Agreement (3) the Supplemental Conditions, and (4) the Standard General Conditions of the Construction Contract.

IN WITNESS WHEREOF, the parties have executed this Agreement to become effective as of the date of the last party's signature.

CITY OF RIO RANCHO

By:_____
Peter Wells, Acting City Manager

Date:_____

CONTRACTOR NAME

By:_____
CONTRACTOR NAME

Date:_____

APPROVED AS TO FORM:

_____
Gregory F. Lauer, City Attorney

PERFORMANCE BOND

Any singular reference to Contractor, Surety, Owner or other party shall be considered plural where applicable.

CONTRACTOR (Name and Address):

SURETY (Name and Principal Place of Business):

OWNER (Name and Address):

CONSTRUCTION CONTRACT
Date:
Amount:
Description (Name and Location):

BOND
Date (Not earlier than Construction Contract Date):
Amount:
Modifications to this Bond Form:

CONTRACTOR AS PRINCIPAL	SURETY
Company: (Corp. Seal)	Company: (Corp. Seal)
Signature: _____	Signature: _____
Name and Title:	Name and Title:
CONTRACTOR AS PRINCIPAL	SURETY
Company: (Corp. Seal)	Company: (Corp Seal)
Signature: _____	Signature: _____
Name and Title:	Name and Title:

EJCDC No. 1910-28-A (2007)
Originally prepared through the joint efforts of the Surety Association of America, Engineers Joint Contract Documents Committee, the Associated General Contractors of America, and the American institute of Architects.

1. The CONTRACTOR and the Surety, jointly and severally, bind themselves, their heirs, executors, administrators, successors and assigns to the Owner for the performance of the Contract, which is incorporated herein by reference.
2. If the CONTRACTOR performs the Contract, the Surety and the CONTRACTOR have no obligation under this Bond, except to participate in conferences as provided in paragraph 3.1.
3. If there is no OWNER Default, the Surety's obligation under this Bond shall arise after:
3.1. The OWNER has notified the CONTRACTOR and the Surety at the addresses described in paragraph 10 below, that the OWNER is considering declaring a CONTRACTOR Default and has requested and attempted to arrange a conference with the CONTRACTOR and the Surety to be held not later than fifteen days after receipt of such notice to discuss methods of performing the Contract. If the OWNER, the CONTRACTOR and the Surety agree, the CONTRACTOR shall be allowed a reasonable time to perform the Contract, but such an agreement shall not waive the OWNER' right, if any, subsequently to declare a CONTRACTOR Default; and
3.2. The OWNER has declared a CONTRACTOR Default and formally terminated the CONTRACTOR's right to complete the Contract. Such CONTRACTOR Default shall not be declared earlier than twenty days after the CONTRACTOR and the Surety have received notice as provided in paragraph 3.1; and
3.3. The OWNER has agreed to pay the Balance of the Contract Price to:
3.3.1. The Surety in accordance with the terms of the Contract;
3.3.2.Another contractor selected pursuant to paragraph 4.3 to perform the Contract.

4. When the OWNER has satisfied the conditions of paragraph 3, the Surety shall promptly and at the Surety's expense take one of the following actions:
4.1. Arrange for the CONTRACTOR, with consent of the OWNER, to perform and complete the Contract; or
4.2. Undertake to perform and complete the Contract itself, through its agents or through independent contractors; or
4.3. Obtain bids or negotiated proposals from qualified contractors acceptable to the OWNER for a contract for performance and completion of the Contract, arrange for a contract to be prepared for execution by the OWNER and the contractor selected with the OWNER's concurrence, to be secured with performance and payment bonds executed by a qualified surety equivalent to the Bonds issued on the Contract, and pay to the OWNER the amount of damages as described in paragraph 6 in excess of the Balance of the Contract Price incurred by the OWNER resulting from the CONTRACTOR Default; or
4.4. Waive its right to perform and complete, arrange for completion, or obtain a new contractor and with reasonable promptness under the circumstances;
4.4.1. After investigation, determine the amount for which it may be liable to the OWNER and, as soon as practicable after the amount is determined, tender payment therefore to the OWNER; or
4.4.2. Deny liability in whole or in part and notify the OWNER citing reasons therefore.
5. If the Surety does not proceed as provided in paragraph 4 with reasonable promptness, the Surety shall be deemed to be in default on this Bond fifteen days after receipt of an additional written notice from the OWNER to the Surety demanding that the Surety perform its obligations under this Bond, and the OWNER shall be entitled to enforce any remedy available to the OWNER. If the Surety proceeds as provided in paragraph 4.4, and the OWNER refuses the payment tendered or the Surety has denied pliability, in whole or in part, without further notice the OWNER shall be entitled to enforce any remedy available to the OWNER.
6. After the OWNER has terminated the CONTRACTOR's right to complete the Contract, and if the Surety elects to act under paragraph 4.1,4.2, or 4.3 above, then the responsibilities of the Surety to the OWNER shall not be greater than those of the CONTRACTOR under the Contract, and the responsibilities of the OWNER to the Surety shall not be greater than those of the OWNER under the Contract. To a limit of the amount of this Bond, but subject to commitment by the OWNER of the Balance of the Contract Price to mitigation of costs and damages on the Contract, the Surety is obligated without duplication for:
6.1 The responsibilities of the CONTRACTOR for correction of defective work and completion of the Contract;
6.2. Additional legal, design professional and delay costs resulting from the CONTRACTOR's Default, and resulting from the actions or failure to act of the Surety under paragraph 4; and
6.3. Liquidated damages, or if no liquidated damages are specified in the Contract, actual damages caused by delayed performance or non performance of the CONTRACTOR.
7. The Surety shall not be liable to the OWNER or others for obligations of the CONTRACTOR that are unrelated to the Contract, and the Balance of the Contract Price shall not be reduced or set off on account of any such unrelated obligations. No right of action shall accrue on this Bond to any person or entity other than the OWNER or its heirs, executors, administrators, or successors.
8. The Surety hereby waives notice of any change, including changes of time, to the Contract or to related subcontracts, purchase orders and other obligations.
9. Any proceeding, legal or equitable, under this Bond may be instituted in any court of competent jurisdiction in the location in which the Work or part of the Work is located and shall be instituted within two years after CONTRACTOR Default or within two years after the CONTRACTOR ceased working or within two years after the Surety refuses or fails to perform its obligations under this Bond, whichever occurs first. If the provisions of this paragraph are void or prohibited by law, the minimum period of limitation available to sureties as a defense in the jurisdiction of the suit shall be applicable.
10. Notice of the Surety, the OWNER or the CONTRACTOR shall be mailed or delivered to the address shown on the signature page.
11. When this Bond has been furnished to comply with a statutory or other legal requirements in the location where the Contract was to be performed, any provisions in this Bond conflicting with said statutory or legal requirement shall be deemed deleted here from and provisions conforming to such statutory or other legal requirement shall be deemed incorporated herein. The intent is that this Bond shall be construed as a statutory bond and not as a common law bond.
12. Definitions.
12.1 Balance of the Contract Price: The total amount payable by the OWNER to the CONTRACTOR under the Contract after all proper adjustments have been made, including allowance to the CONTRACTOR of any amounts received or to be received by the OWNER in settlement of insurance or other Claims for damages to which the CONTRACTOR is entitled, reduced by all valid and proper payments made to or on behalf of the CONTRACTOR under the Contract.
12.2 Contract: The agreement between the OWNER and the CONTRACTOR identified on the signature page, including all Contract Documents and changes thereto.
12.3 CONTRACTOR Default: Failure of the CONTRACTOR, which has neither been remedied nor waived, to perform or otherwise to comply with the terms of the Contract.
12.4 Owner Default: Failure of the OWNER, which has neither been remedied nor waived, to pay the CONTRACTOR as required by the Contract or to perform and complete or comply with the other terms thereof.

LABOR AND MATERIAL PAYMENT BOND

KNOW ALL MEN BY THESE PRESENTS:

THAT_____
as Principal, hereinafter called the Contractor, and_____, a corporation organized and existing under and by virtue of the laws of the State of _____ and authorized to do business in the State of New Mexico, a Surety, hereinafter called the Surety, are held and firmly bound unto the City of Rio Rancho, as obligee, hereinafter called the Agency, in the amount of _____ Dollars ($ _____), For the payment whereof Contractor and Surety bind themselves, their heirs, executors, administrators, successors, and assigns jointly and severally firmly by these presents.

WHEREAS, the Contractor has by written agreement dated _____, 20___, entered into a contract with Agency for the project described as follows: **MEADOWLARK LANE PEDESTRIAN PATH RECONSTRUCTION**, which Contract is by reference made a part hereof and is hereinafter referred to as the Contract.

NOW, THEREFORE, the condition of this obligation is such that if the Contractor shall pay as they become due, all just claims for labor performed and materials and supplies furnished upon or for the work under said Contract, whether said labor be performed and materials and supplies be furnished under the original Contract or any Contract thereunder, then this obligation shall be null and void; otherwise it shall remain in full force and effect subject to the following conditions:

The right to sue on this bond accrues only to the Agency and the parties to whom New Mexico Statute Annotated Sections 6-6-11 through 6-6-13, NMSA 1953, comp. as amended, grant such right; and any such right shall be exercised only in accordance with the provisions and limitations of said statutes.

SIGNED AND SEALED THIS _____ day of _____, 20 ___.

_____
(Contractor-Principal)

By: _____

Title: _____

New Mexico Contractor's
License No. _____

ATTEST:

_____

_____
Surety

By: _____

Title: _____

ATTEST:

_____

This Bond is issued simultaneously with Performance Bond in favor of the Owner for the faithful performance of the Contract.

CITY OF RIO RANCHO
STATE OF NEW MEXICO

PURCHASING DIVISION
3200 Civic Center Circle NE - Suite 300
Rio Rancho, NM 87144

INVITES YOUR FIRM TO OFFER A BID ON:

IFB 21-PW-003
MEADOWLARK LANE PEDESTRIAN PATH RECONSTRUCTION

AS SPECIFIED IN THE ATTACHED BID DOCUMENTS.

Sealed bids will be received until 10:00 A.M. Local Mountain Time on Thursday, July 30, 2020.

By the
Email: mschimmel@rrnm.gov
Mailed Originals: City of Rio Rancho
Office of the City Clerk
1st Floor, Room # 150
3200 Civic Center Circle NE
Rio Rancho, NM 87144

_____
NAME OF BIDDER/CONTRACTOR

_____
ADDRESS

_____
CITY, STATE ZIP CODE

_____ _____ _____
TELEPHONE FAX EMAIL

Complete this form as well as the following forms in their entirety as specified in the Instruction to Bidders to ensure that your bid submission is complete.

BID FORM

This Bid is submitted to the City of Rio Rancho, New Mexico (hereinafter called "OWNER").

1. The undersigned (hereinafter called "BIDDER"), in compliance with your invitation for bids for the MEADOWLARK LANE PEDESTRIAN PATH RECONSTRUCTION, having examined the drawings and specifications, with related documents, and having examined the site of the proposed work, and being familiar with all of the conditions surrounding the construction of the proposed project, including the availability of labor, materials and supplies, hereby proposes to furnish all labor, materials and supplies, and to construct the project in accordance with the contract documents at the prices stated below. These prices are to cover all expenses incurred in performing the work required under the contract documents, of which this proposal is a part.

2. **BID SUBMISSION:** The Bidder agrees to perform all of the following Base Work and any/or all Additive Alternate work for the amount(s) submitted for MEADOWLARK LANE PEDESTRIAN PATH RECONSTRUCTION determined as follows:

   CITY OF RIO RANCHO
   MEADOWLARK LANE PEDESTRIAN PATH RECONSTRUCTION

Base Bid

Bid Item	Spec. Type	Spec. #	Item Description	Unit	Est. Qty.	Unit Price	Total Amount
1	CoRR	0205-000	SUBGRADE PREPARATION	SY	4350		
2	CoRR	0601-000	REMOVAL OF STRUCTURES AND OBSTRUCTIONS	LS	1		
3	CoRR	0601-150	REMOVAL OF SURFACING	SY	4350		
4	CoRR	1000-000	UTILITY COORDINATION ALLOWANCE (See SC 12.03.F)	ALLOW	1	$ 5,000.00	$ 5,000.00
5	CoRR	3000-000	MATERIAL TESTING ALLOWANCE (See NTC)	ALLOW	1	$ 12,000.00	$ 12,000.00
6	NMAPWA	340	NMAPWA DWG. 2236 DRAINAGE SIDEWALK CULVERT WITH STEEL PLATE TOP	EA	3		
7	NMDOT	511000	STRUCTURAL CONCRETE, CLASS A	CY	2		
8	NMDOT	608004	CONCRETE SIDEWAKL 4 INCH	SY	4350		
9	NMDOT	618000	TRAFFIC CONTROL MANAGEMENT	LS	1		
10	NMDOT	621000	MOBILIZATION	LS	1		
11	NMDOT	702810-SP	TRAFFIC CONTROL DEVICES FOR CONSTRUCTION (S.P. 702-C)	LS	1		
12	NMDOT	801000	CONSTRUCTION STAKING BY THE CONTRACTOR	LS	1		
13	Other	100.1	SIGN REMOVE AND REPLACE: EXISTING ROADWAY SIGNS, REMOVE, STORE AND REPLACE:C.I.P.	EA	10		

Base Bid Subtotal:	
NMGRT @ 7.6875%:	
Total for Base Bid including NMGRT:	

Additive Alternate 1

Bid Item	Spec. Type	Spec. #	Item Description	Unit	Est. Qty.	Unit Price	Total Amount
14	CoRR	0202-000	UNCLASSIFIED EXCAVATION	CY	380		
15	CoRR	0310-130	BASE COURSE 3 IN. DEPTH	SY	4350		
16	CoRR	0425-500	ASPHALT MATERIAL FOR TACK COAT	TON	1		
17	NMDOT	423270	HMA COMPLETE SP-IV	SY	4350		
18	NMDOT	608004	CONCRETE SIDEWAKL 4 INCH	SY	-4350		
Additive Alternate 1 Subtotal:							
NMGRT @ 7.6875%:							
Total for Additive Alternate 1 including NMGRT:							

Base Bid Subtotal: _____

Additive Alternate #1 Subtotal: _____

Overall Bid Subtotal: _____

NMGRT @ 7.6875%: _____

Total Bid Submission including Base Bid, all Additive Alternates and NMGRT: _____

3. BIDDER acknowledges receipt of the following Addenda:

   Addendum No. _____ Date _____ Addendum No. _____ Date _____

   Addendum No. _____ Date _____ Addendum No. _____ Date _____

   Addendum No. _____ Date _____ Addendum No. _____ Date _____

4. BIDDER agrees that this Bid Proposal may not be withdrawn for a period of sixty (60) calendar days after the scheduled closing time for receipt of bids.

5. If the Contract is to be awarded. OWNER will give the apparent Successful Bidder a Notice of Recommendation to Award within sixty (60) days after the scheduled closing time for receipt of bids.

6. Upon receipt of Notice of Recommendation to Award, BIDDER shall execute the formal Contract Documents within ten (10) days and deliver the Performance Bond, Labor and Material Payment Bond, and Certificates of Insurance as required herein.

7. The attached Bid Security is to become the property of the OWNER, in the event the Agreement and bonds are not executed within the time specified in this Bid Proposal, as liquidated damages for the delay and additional expenses caused to the OWNER.

8. BIDDER hereby agrees to commence Work under this Contract in accordance with the Notice to Proceed from the OWNER and to substantially complete the Project as provided in the Contract Documents within **Thirty (30)** consecutive calendar days after the date Contract Time begins as provided in the Contract Documents.

   BIDDER further agrees to pay, as liquidated damages, the amount of **One Thousand dollars ($ 1,000.00)** for each consecutive calendar day thereafter as provided in the Supplementary Conditions.

9. BIDDER hereby declares that the only persons or firms interested in the Bid Proposal as principal or principles is or are named herein and that no other persons or firms than herein mentioned have any interest in the Bid or in the Contract to be entered into; that this Bid is made without collusion with any person, company, or parties making a bid or proposal; and that it is in all respects fair and in good faith without collusion or fraud.

10. BIDDER hereby agrees if awarded the Contract, to comply with the Affirmative Action/Equal Employment Opportunity and Nondiscrimination requirements of the Supplementary Conditions and to submit all information and reports required therein.

11. If requested, BIDDER agrees to furnish to the OWNER all information and data necessary for the OWNER to determine the ability of BIDDER to perform the Work.

This Bid is hereby respectfully submitted by:

_____	_____
Name of BIDDER	Federal Tax ID Number
_____	
By: Printed Name	
_____	_____
Authorized Signature	Title
_____	
Date	

_____
Bidder's Mailing Address

_____
Additional Address Information

_____
City, State, Zip Code

_____
Bidder's Telephone Number

_____
Bidder's Fax Number

_____
Bidder's E-Mail Address

_____
Bidder's Gross Receipts Tax No.

_____
Bidder's NM Contractor's License Number(s) and Classifications(s)

_____
Contractor's Department of Labor Registration Number

_____
New Mexico State Corporation Commission Number

_____
Bidder's Data Universal Numbering System (DUNS) No.

CITY OF RIO RANCHO BIDDER'S LISTING of SUBCONTRACTORS for Compliance with SUBCONTRACTORS FAIR PRACTICES ACT AND PUBLIC WORKS MINIMUM WAGE ACT

BIDDER must list all Subcontractors whose listing is required pursuant to the New Mexico Subcontractors Fair Practices Act and estimated work exceeds the threshold amount of Five Thousand and no/100 Dollars ($5,000.00) or ½ of 1% of the engineer's estimate as well as those under this threshold pursuant to the Public Works Minimum Wage Act. Both the General Contractor and all tiers of subcontractors must be actively registered with NM Department of Workforce Solutions prior to submission of bid.

Subcontractor #1	Company Name:		FEIN:	
	Address:		License Number:	
	Email:		City:	
	Phone Number:		State:	
	Fax Number:		Zip:	
	Work to be performed:		Contract Amount:	$
Subcontractor #2	Company Name:		FEIN:	
	Address:		License Number:	
	Email:		City:	
	Phone Number:		State:	
	Fax Number:		Zip:	
	Work to be performed:		Contract Amount:	$
Subcontractor #3	Company Name:		FEIN:	
	Address:		License Number:	
	Email:		City:	
	Phone Number:		State:	
	Fax Number:		Zip:	
	Work to be performed:		Contract Amount:	$
Subcontractor #4	Company Name:		FEIN:	
	Address:		License Number:	
	Email:		City:	
	Phone Number:		State:	
	Fax Number:		Zip:	
	Work to be performed:		Contract Amount:	$
Subcontractor #5	Company Name:		FEIN:	
	Address:		License Number:	
	Email:		City:	
	Phone Number:		State:	
	Fax Number:		Zip:	
	Work to be performed:		Contract Amount:	$

NOTICE TO BIDDER

List only one subcontractor for each category of work. Additional sheets listing subcontractors may be attached if necessary.
Failure to comply with these requirements will make the bid non–responsive and the bid will be rejected.

Printed Name & Title:		**Name of Bidder/ Contractor:**	
Signature:		**Date:**	

Bid Bond

BIDDER (Name and Address):

_____
_____
_____

SURETY (Name and Address of Principal Place of Business):

_____
_____
_____

OWNER (Name and Address):

_____
_____
_____

BID
BID DUE DATE: _____
PROJECT (Brief Description Including Location):

_____
_____
_____

BOND
BOND NUMBER: _____
Date (Not later than Bid due date): _____
Penal Sum: _____ _____
(Words) (Figures)

IN WITNESS WHEREOF, Surety and Bidder, intending to be legally bounded hereby, subject to the terms printed on the reverse side hereof, do each cause this Bid Bond to be duly executed on its behalf by its authorized officer, agent, or representative.

BIDDER

_____ (Seal)
Bidder's Name and Corporate Seal

By: _____
Signature and Title

Attest: _____
Signature and Title

SURETY

_____ (Seal)
Surety's Name and Corporate Seal

By: _____
Signature and Title
(Attached power of Attorney)

Attest: _____
Signature and Title

Note: (1) Above address are to be used for giving required notice.
(2) Any singular reference to Bidder, Surety, OWNER or other party shall be considered plural where applicable.

Bidder and Surety, jointly and severally, bind themselves, their heirs, executors, administrators, successors, and assigns to pay to OWNER upon default of Bidder the penal sum set forth on the face of this Bond.

2. Default of Bidder shall occur upon the failure of Bidder to deliver within the time required by the Bidding Documents (or any extension thereof agreed to in writing by OWNER) the executed Agreement required by the Bidding Documents and any performance and payment Bonds required by the Bidding Documents.

3. This obligation shall be null and void if:
3.1 OWNER accepts Bidder's Bid and Bidder delivers within the time required by the Bidding Documents (or any extension thereof agreed to in writing by OWNER) the executed Agreement required by the Bidding Documents and any performance and payment Bonds required by the Bidding Documents, or
3.2 All Bids are rejected by OWNER, or
3.3 OWNER fails to issue a Notice of Award to Bidder within the time specified in the Bidding Documents (or any extension thereof agreed to in writing by Bidder and, if applicable, consented to by Surety when required by paragraph 5 hereof).

4. Payment under this Bond will be due and payable upon default by Bidder and within thirty (30) calendar days after receipt by Bidder and Surety of written notice of default from OWNER, which notice will be given with reasonable promptness identifying this Bond and the Project and including a statement of the amount due.

5. Surety waives notice of and any and all defenses based on or arising out of any time extension to issue Notice of Award agreed to in writing by OWNER and Bidder, provided that the total time for issuing Notice of Award including extensions shall not in the aggregate exceed 120 days from Bid due date without Surety's written consent.

6. No suit or action shall be commenced under this Bond prior to thirty (30) calendar days after the notice of default required in paragraph 4 above is received by Bidder and Surety and in no case later than one year after Bid due date.

7. Any suit or action under this Bond shall be commenced only in a court of competent jurisdiction located in the state in which the Project is located.

8. Notices required hereunder shall be in writing and sent to Bidder and Surety at their respective addresses shown on the face of this Bond. Such notices may be sent by personal delivery, commercial courier or by United States Registered or Certified Mail, return receipt requested, postage pre-paid, and shall be deemed to be effective upon receipt by the party concerned.

9. Surety shall cause to be attached to this Bond a current and effective Power or Attorney evidencing the authority of the offer, agent or representative who executed this Bond on behalf of Surety to execute, seal and deliver such Bond and bind the Surety thereby.

10. This Bond is intended to conform to all applicable statutory requirements. Any applicable requirement of any applicable statute that has been omitted from this Bond shall be deemed to be included herein as if set forth at length. If any provision of this Bond conflicts with any applicable statute, then the provision of said statute shall govern and the remainder of this Bond that is not in conflict therewith shall continue in full force and effect.

11. The term "Bid" as used herein includes a Bid, offer or proposal as applicable.

LOCAL/AREA/RESIDENT/RESIDENT VETERAN/RECYCLED CONTENT GOODS PREFERENCE CERTIFICATION FORM

Business Name: _____

Principle Place of Business: _____

Address: _____

State: _____

Zip Code: _____

DEFINITIONS:

Recycled content goods has the meaning set forth in NMSA 1978 § 13-1-21(A)(6) , as amended from time to time.

RESIDENT BUSINESS has the meaning set forth in NMSA 1978 § 13-1-21(A)(5) , as amended from time to time.

RESIDENT CONTRACTOR has the meaning set forth in NMSA 1978 § 13-4-2(A)(5) , as amended from time to time.

RESIDENT VETERAN BUSINESS has the meaning set forth in NMSA 1978 § 13-1-21(A)(7), as amended from time to time.

RESIDENT VETERAN CONTRACTOR has the meaning set forth in NMSA 1978 § 13-4-2(A)(6), as amended from time to time.

STATUTORY PREFERENCE means the preference for Resident Businesses, Resident Contractors, Resident Veteran Businesses, Resident Veteran Contractors, and Recycled Content Goods provided in NMSA 1978 §§ 13-1-21 or 13-4-5, as amended from time to time.

Qualifying company means a company that qualifies for a Statutory Preference under NMSA 1978 §§ 13-1-21 or 13-4-5, as amended from time to time.

LOCAL BUSINESS means a Resident Business or Resident Contractor which:

(a) Is authorized to do and is doing business under the laws of the State of New Mexico;
(b) Possesses a current city business registration;
(c) Maintains its principal place of business within the corporate limits of the city; and
(d) Agrees to furnish evidence, in a form suitable to the city, of its payment of New Mexico Gross Receipts Tax.

AREA BUSINESS means a Resident Business or Resident Contractor which:

(a) Is authorized to do and is doing business under the laws of the State of New Mexico;
(b) Possesses a current city business registration;
(c) Maintains a bona fide place of business within the corporate limits of the city, and agrees to conduct its activities pursuant to the contract for which it is bidding or proposing, to the extent practicable, from that place of business; and
(d) Agrees to furnish evidence, in a form suitable to the city, of its payment of New Mexico Gross Receipts Tax.

No bid or proposal shall receive both the Local Business and Area Business preferences.

INSTRUCTIONS:

In all invitations for bid and requests for proposals, the Statutory Preferences shall be applied in the manner set forth in NMSA 1978 §§ 13-1-21 or 13-4-5, as amended from time to time.

In addition to the Statutory Preferences, a preference for Local Businesses and Area Businesses shall be administered in the same manner as the Statutory Preferences, as follows:

(1) in the event a Local Business submits a qualifying bid or proposal and one or more Qualifying Companies also submits a bid or proposal, the Local Business shall receive a two percent (2%) preference in addition to (and not in lieu of) the Statutory Preference; and

(2) in the event an Area Business submits a qualifying bid or proposal and one or more Qualifying Companies also submits a bid or proposal, the Area Business shall receive a one percent (1%) preference in addition to (and not in lieu of) the Statutory Preference.

No bid or proposal shall receive both the Local Business and Area Business preferences.

In addition to the definitions and criteria set forth in this section, the central purchasing office may impose additional requirements regarding the nature, size and/or location of offerors or bidders in any request for proposals or invitation for bids. As a result, companies responding to such solicitations should review the solicitation documents thoroughly.

A COPY OF A RESIDENT BUSINESS OR CONTRACTOR / VETERAN BUSINESS OR CONTRACTOR CERTIFICATE ISSUED BY THE NEW MEXICO TAXATION AND REVENUE DEPARTMENT IS REQUIRED TO BE SUBMITTED ALONG WITH YOUR BID / OFFER IN ORDER TO QUALIFY FOR THE STATUTORY RESIDENT / VETERAN PREFERENCE. In addition, the attached Resident Veterans Preference Certification form must accompany any bid/offer and any business wishing to receive a resident veteran's preference must complete and sign the form.

REQUESTS FOR RECYCLED CONTENT GOODS PREFERENCE MUST BE ACCOMPANIED BY OFFICIAL / VERIFIABLE EVIDENCE THAT THE MATERIAL BEING BID / OFFERED CONTAINS THE MINIMUM RECYCLED CONTENT REQUIRED BY STATE STATUE.

THIS FORM MUST BE SUBMITTED AT THE TIME BIDS / OFFERS IN ORDER TO CLAIM LOCAL, AREA, RESIDENT, VETERAN OR RECYCLED CONTENT GOODS PREFERENCE.

PLEASE INDICATE THE TYPE OF PREFERENCE CLAIMED:

If your firm is a Qualifying Company please circle the type of preference for which your firm qualifies and indicate your appropriate annual revenue threshold:

RECYCLED CONTENT GOODS

RESIDENT BUSINESS

RESIDENT CONTRACTOR

RECYCLED CONTENT GOODS RESIDENT VETERAN BUSINESS
☐ Annual revenue up to $3,000,000.00
☐ Annual revenue more than $3,000,000.00 or more

RESIDENT VETERAN BUSINESS
☐ Annual revenue up to $3,000,000.00
☐ Annual revenue more than $3,000,000.00 or more

RESIDENT VETERAN CONTRACTOR
☐ Annual revenue up to $3,000,000.00
☐ Annual revenue more than $3,000,000.00 or more

If your firm is applying for either a Local or Area Preference, please circle the type of preference for which your firm qualifies. (Select only one):

LOCAL BUSINESS AREA BUSINESS

CITY OF RIO RANCHO BUSINESS LICENSE REGISTRATION NUMBER: _____
(Must be provided if claiming Local Business or Area Business Preference)

If submitting a joint bid/proposal please indicated proportion of work to be completed by qualifying company:

_____%

CERTIFICATION: I hereby certify that the information which I have provided on this form is true and correct, that I am authorized to sign on behalf of the business set out above and if requested by the City will provide, within 10 days of notice, the necessary documents to substantiate the information provided on this form.

By: _____ Title: _____ Date: _____

RESIDENT VETERANS PREFERENCE CERTIFICATION

_____ (NAME OF CONTRACTOR) hereby certifies the following in regard to application of the resident veterans' preference to this procurement:

Please check one box only:

☐ I declare under penalty of perjury that my business prior year revenue starting January 1 ending December 31 is less than $3M allowing me the 10% preference discount on this solicitation. I understand that knowingly giving false or misleading information about this fact constitutes a crime.

"I agree to submit a report, or reports, to the State Purchasing Division of the General Services Department declaring under penalty of perjury that during the last calendar year starting January I and ending on December 31, the following to be true and accurate:

"In conjunction with this procurement and the requirements of this business' application for a Resident Veteran Business Preference/Resident Veteran Contractor Preference under Sections 13-1-21 or 13-1-22 NMSA 1978, when awarded a contract which was on the basis of having such veterans preference, I agree to report to the State Purchasing Division of the General Services Department the awarded amount involved. I will indicate in the report the award amount as a purchase from a public body or as a public works contract from a public body as the case may be.

"I understand that knowingly giving false or misleading information on this report constitutes a crime."

I declare under penalty of perjury that this statement is true to the best of my knowledge. I understand that giving false or misleading statements about material fact regarding this matter constitutes a crime.

_____ _____

Signature of Business Representative Date

*Must be an authorized signatory for the Business.

The representations made in checking the boxes constitutes a material representation by the business that is subject to protest and may result in denial of an award or unaward of the procurement involved if the statements are proven to be incorrect.

CERTIFICATION OF BIDDER REGARDING AFFIRMATIVE ACTION / EQUAL EMPLOYMENT OPPORTUNITY AND NONDISCRIMINATION

PROJECT: Meadowlark Pedestrian Path Reconstruction

The Bidder hereby acknowledges and agrees to abide by the Special provisions for Affirmative Action/Equal Employment Opportunity and Nondiscrimination and all other provisions, regulations, of the OWNER for Affirmative Action/Equal Employment Opportunity and Nondiscrimination.

The Bidder has participated with any agency in a previous contract or subcontract subject to any Equal Employment Opportunity and Nondiscrimination in Employment requirements?

Yes ( ) No ( )

Compliance reports were required to be filed in connection with such contract or subcontract?

Yes ( ) No ( )

The Bidder has filed all compliance reports due under applicable instructions? If answer to this statement is "No, explain in detail on the reverse side of this certification.

_____
Name of Bidder

_____
Address of Bidder

_____
Telephone Number

_____
By (Signature) (Date)

_____
Printed Name & Title of Bidder's Authorized Representative.

NON-COLLUSION AFFIDAVIT OF PRIME BIDDER

State of _____}

County of _____}

Being first duly sworn deposes and says that:

1. He/She is the _____ of, the Bidder that has submitted the attached bid;

2. He/She is fully informed respecting the preparation and contents of the attached Bid and of all pertinent circumstances respecting such Bid;

3. Such Bid is genuine and is not a collusive or sham Bid;

4. Neither the said Bidder nor any of its officers, partners, owners, agents, representatives, employees or parties in interest including this affiant, has in any way colluded, conspired, connived or agreed, directly or indirectly with any other bidder, firm or person to submit a collusive or sham Bid in connection with the Contract for which the attached Bid has been submitted or to refrain from Bidding in connection with such Contract, or has in any manner, directly or indirectly, sought by agreement or collusion or communications or conference with any other Bidder firm or person to fix the price or prices in the attached Bid or of any other Bidder, or to fix any overhead, profit or cost element of the Bid price of any other Bidder, or to secure through collusion, conspiracy, connivance or unlawful agreement any advantage against the City of Rio Rancho or any person interested in the proposed Contract; and

5. The price or prices quoted in the attached Bid are fair and proper and are not tainted by any collusion, conspiracy, connivance or unlawful agreement on the part of the Bidder or any of its agents, representatives, owners, employees, or parties in interest, including this affiant.

Subscribed and sworn to before

Me this_____ day of_____, 20_____

Signed:

_____

_____ _____

Notary Public Title

My commission expires: _____

LABOR RELATIONS DIVISION **WWW.DWS.STATE.NM.US**

401 Broadway NE
Albuquerque, NM 87102
Phone: 505-841-4400
Fax: 505-841-4424

226 South Alameda Blvd
Las Cruces, NM 88005
Phone: 575-524-6195
Fax: 575-524-6194

1596 Pacheco St, Suite 103
Santa Fe, NM 87505
Phone: 505-827-6817
Fax: 505-827-9676

Wage Decision Approval Summary

1) Project Title: Meadowlark Lane Pedestrian Path Reconstruction Project
Requested Date: 07/06/2020
Approved Date: 07/07/2020
Approved Wage Decision Number: SA-20-1390-A

Wage Decision Expiration Date for Bids: 11/04/2020

2) Physical Location of Jobsite for Project:
Job Site Address: Meadowlark Ln SE
Job Site City: Rio Rancho
Job Site County: Sandoval

3) Contracting Agency Name (Department or Bureau): City of Rio Rancho
Contracting Agency Contact's Name: Matt Schimmel
Contracting Agency Contact's Phone: (505) 891-5064 Ext.

4) Estimated Bid Opening Date: 08/04/2020

5) Estimated total project cost: $425,000.00
a. Are any federal funds involved?: No
b. Does this project involve a building?: No
c. Is this part of a larger plan for construction on or appurtenant to the property that is subject to this project?: No
d. Are there any other Public Works Wage Decisions related to this project?: No
e. What is the ultimate purpose or functional use of the construction once it is completed?: Removing the existing 12 wide asphalt pedestrian path on Meadowlark Lane, from approximately NM528 to Eileen Rd., replacing it in the same footprint, with 4" thick concrete and removing and replacing three sidewalk culverts. In addition, constructing approximately 1000 L.F. of new 5 wide sidewalk with two new ADA compliant curb ramps from Eileen Rd. to Sara Rd.

6) Classifications of Construction:

Classification Type and Cost Total	Description
Highway/Utilities (A) **Cost:** $425,000.00	Removing the existing 12 wide asphalt pedestrian path on Meadowlark Lane, from approximately NM528 to Eileen Rd., replacing it in the same footprint, with 4" thick concrete and removing and replacing three sidewalk culverts. In addition, constructing approximately 1000 L.F. of new 5 wide sidewalk with two new ADA compliant curb ramps from Eileen Rd. to Sara Rd.

LABOR RELATIONS DIVISION
121 Tijeras Ave NE, Suite 3000
Albuquerque, NM 87102
Phone: 505-841-4400
Fax: 505-841-4424

PUBLIC WORKS PROJECT REQUIREMENTS

As a participant in a Public Works project valued at more than $60,000 in the state of New Mexico, the following list addresses many of the responsibilities that are defined by statute or regulation to each project stakeholder.

Contracting Agency

- Ensure that all contractors wishing to bid on a Public Works project when the project is $60,000 or more are actively registered with the Public Works and Apprenticeship Application (PWAA) website: http://www.dws.state.nm.us/pwaa (Contractor Registration) prior to bidding.
- Please submit Notice of Award (NOA) and Subcontractor List(s) to the PWAA website promptly after the project is awarded.
- Please update the Subcontractor List(s) on the PWAA website whenever changes occur.
- All sub-contractors and tiers (excluding professional services) regardless of contract amount must be listed on the Subcontractor List and must adhere to the Public Works Minimum Wage Act.
- Ninety days after project completion please go into the PWAA system and close the project. Only contracting agencies are allowed to close the project. Agents or contractors are not allowed to close projects.

General Contractor

- Provide a complete Subcontractor List and Statements of Intent (SOI) to Pay Prevailing Wages for all contractors, regardless of amount of work, to the contracting agency within 3 (three) days of award.
- Ensure that all subcontractors wishing to bid on a Public Works project have an active Contractor Registration with the Public Works and Apprenticeship Application (PWAA) website: http://www.dws.state.nm.us/pwaa prior to bidding when their bid will exceed $60,000.
- Make certain the Public Works Apprentice and Training Act contributions are paid either to an approved Apprenticeship Program or to the Public Works Apprentice and Training Fund.
- Confirm the Wage Rate poster, provided in PWAA, is displayed at the job site in an easily accessible place.
- When the project has been completed, make sure the Affidavits of Wages Paid (AWP) are sent to the contracting agency.
- All subcontractors and tiers (excluding professional services) regardless of contract amount must pay prevailing wages, be listed on the Subcontractor List, and adhere to the Public Works Minimum Wage Act.

Subcontractor

- Ensure that all subcontractors wishing to bid on a Public Works project have an active Contractor Registration with the Public Works and Apprenticeship Application (PWAA) website: http://www.dws.state.nm.us/pwaa prior to bidding when their bid will exceed $60,000.
- Make certain the Public Works Apprentice and Training Act contributions are paid either to an approved Apprenticeship Program or to the Public Works Apprentice and Training Fund.
- All subcontractors and tiers (excluding professional services) regardless of contract amount must pay prevailing wages, be listed on the Subcontractor List, and adhere to the Public Works Minimum Wage Act.

Additional Information

Reference material and forms may be found in the New Mexico Department of Workforce Solutions Public Works web pages at: https://www.dws.state.nm.us/Labor-Relations/Labor-Information/Public-Works.

CONTACT INFORMATION

Contact the Labor Relations Division for any questions relating to Public Works projects by email at public.works@state.nm.us or call (505) 841-4400.

TYPE "A" - STREET, HIGHWAY, UTILITY & LIGHT ENGINEERING

Effective January 1, 2020

Trade Classification	Base Rate	Fringe Rate
Bricklayer/Block layer/Stonemason	24.46	8.81
Carpenter/Lather	24.63	11.24
Carpenter- Los Alamos County	27.80	13.19
Cement Mason	17.42	6.81
Ironworker	27.00	15.75
Painter- Commercial	17.00	6.88
Plumber/Pipefitter	30.76	11.62
Electricians- Outside Classifications: Zone 1		
Ground man	23.27	12.67
Equipment Operator	33.39	15.35
Lineman/ Technician	39.28	16.91
Cable Splicer	43.21	17.95
Electricians-Outside Classifications: Zone 2		
Ground man	23.27	12.67
Equipment Operator	33.39	15.35
Lineman/ Technician	39.28	16.91
Cable Splicer	43.21	17.95
Electricians-Outside Classifications: Los Alamos		
Ground man	23.94	12.85
Equipment Operator	34.35	15.60
Lineman/ Technician	40.41	17.21
Cable Splicer	44.45	18.28
Laborers		
Group I- Unskilled	12.26	6.22
Group II- Semi-Skilled	12.56	6.22
Group III- Skilled	12.96	6.22
Group IV- Specialty	13.21	6.22
Operators		

Group I	18.79	6.34
Group II	19.72	6.34
Group III	19.82	6.34
Group IV	19.93	6.34
Group V	20.03	6.34
Group VI	20.21	6.34
Group VII	20.37	6.34
Group VIII	20.66	6.34
Group IX	28.16	6.34
Group X	31.41	6.34
Truck Drivers		
Group I-IX	16.45	7.87

NOTE: All contractors are required to pay SUBSISTENCE, ZONE AND INCENTIVE PAY according to the particular trade. Details are located in a PDF attachment at WWW.DWS.STATE.NM.US. Search Labor Relations/Labor Information/Public Works/Prevailing Wage Rates.

For more information about the Subsistence, Zone, and Incentive Pay rates, or to file a wage claim, contact the Labor Relations Division at (505) 841-4400 or visit us online at www.dws.state.nm.us.

LABOR RELATIONS DIVISION **WWW.DWS.STATE.NM.US**

401 Broadway NE
Albuquerque, NM 87102
Phone: 505-841-4400
Fax: 505-841-4424

226 South Alameda Blvd
Las Cruces, NM 88005
Phone: 575-524-6195
Fax: 575-524-6194

1596 Pacheco St, Suite 103
Santa Fe, NM 87505
Phone: 505-827-6817
Fax: 505-827-9676

Wage Decision Approval Summary

1) Project Title: Meadowlark Lane Pedestrian Path Reconstruction Project
Requested Date: 07/06/2020
Approved Date: 07/07/2020
Approved Wage Decision Number: SA-20-1390-A

Wage Decision Expiration Date for Bids: 11/04/2020

2) Physical Location of Jobsite for Project:
Job Site Address: Meadowlark Ln SE
Job Site City: Rio Rancho
Job Site County: Sandoval

3) Contracting Agency Name (Department or Bureau): City of Rio Rancho
Contracting Agency Contact's Name: Matt Schimmel
Contracting Agency Contact's Phone: (505) 891-5064 Ext.

4) Estimated Bid Opening Date: 08/04/2020

5) Estimated total project cost: $425,000.00
a. Are any federal funds involved?: No
b. Does this project involve a building?: No
c. Is this part of a larger plan for construction on or appurtenant to the property that is subject to this project?: No
d. Are there any other Public Works Wage Decisions related to this project?: No
e. What is the ultimate purpose or functional use of the construction once it is completed?: Removing the existing 12 wide asphalt pedestrian path on Meadowlark Lane, from approximately NM528 to Eileen Rd., replacing it in the same footprint, with 4" thick concrete and removing and replacing three sidewalk culverts. In addition, constructing approximately 1000 L.F. of new 5 wide sidewalk with two new ADA compliant curb ramps from Eileen Rd. to Sara Rd.

6) Classifications of Construction:

Classification Type and Cost Total	Description
Highway/Utilities (A) **Cost:** $425,000.00	Removing the existing 12 wide asphalt pedestrian path on Meadowlark Lane, from approximately NM528 to Eileen Rd., replacing it in the same footprint, with 4" thick concrete and removing and replacing three sidewalk culverts. In addition, constructing approximately 1000 L.F. of new 5 wide sidewalk with two new ADA compliant curb ramps from Eileen Rd. to Sara Rd.

LABOR RELATIONS DIVISION
121 Tijeras Ave NE, Suite 3000
Albuquerque, NM 87102
Phone: 505-841-4400
Fax: 505-841-4424

PUBLIC WORKS PROJECT REQUIREMENTS

As a participant in a Public Works project valued at more than $60,000 in the state of New Mexico, the following list addresses many of the responsibilities that are defined by statute or regulation to each project stakeholder.

Contracting Agency

- Ensure that all contractors wishing to bid on a Public Works project when the project is $60,000 or more are actively registered with the Public Works and Apprenticeship Application (PWAA) website: http://www.dws.state.nm.us/pwaa (Contractor Registration) prior to bidding.
- Please submit Notice of Award (NOA) and Subcontractor List(s) to the PWAA website promptly after the project is awarded.
- Please update the Subcontractor List(s) on the PWAA website whenever changes occur.
- All sub-contractors and tiers (excluding professional services) regardless of contract amount must be listed on the Subcontractor List and must adhere to the Public Works Minimum Wage Act.
- Ninety days after project completion please go into the PWAA system and close the project. Only contracting agencies are allowed to close the project. Agents or contractors are not allowed to close projects.

General Contractor

- Provide a complete Subcontractor List and Statements of Intent (SOI) to Pay Prevailing Wages for all contractors, regardless of amount of work, to the contracting agency within 3 (three) days of award.
- Ensure that all subcontractors wishing to bid on a Public Works project have an active Contractor Registration with the Public Works and Apprenticeship Application (PWAA) website: http://www.dws.state.nm.us/pwaa prior to bidding when their bid will exceed $60,000.
- Make certain the Public Works Apprentice and Training Act contributions are paid either to an approved Apprenticeship Program or to the Public Works Apprentice and Training Fund.
- Confirm the Wage Rate poster, provided in PWAA, is displayed at the job site in an easily accessible place.
- When the project has been completed, make sure the Affidavits of Wages Paid (AWP) are sent to the contracting agency.
- All subcontractors and tiers (excluding professional services) regardless of contract amount must pay prevailing wages, be listed on the Subcontractor List, and adhere to the Public Works Minimum Wage Act.

Subcontractor

- Ensure that all subcontractors wishing to bid on a Public Works project have an active Contractor Registration with the Public Works and Apprenticeship Application (PWAA) website: http://www.dws.state.nm.us/pwaa prior to bidding when their bid will exceed $60,000.
- Make certain the Public Works Apprentice and Training Act contributions are paid either to an approved Apprenticeship Program or to the Public Works Apprentice and Training Fund.
- All subcontractors and tiers (excluding professional services) regardless of contract amount must pay prevailing wages, be listed on the Subcontractor List, and adhere to the Public Works Minimum Wage Act.

Additional Information

Reference material and forms may be found in the New Mexico Department of Workforce Solutions Public Works web pages at: https://www.dws.state.nm.us/Labor-Relations/Labor-Information/Public-Works.

CONTACT INFORMATION

Contact the Labor Relations Division for any questions relating to Public Works projects by email at public.works@state.nm.us or call (505) 841-4400.

TYPE "A" - STREET, HIGHWAY, UTILITY & LIGHT ENGINEERING

Effective January 1, 2020

Trade Classification	Base Rate	Fringe Rate
Bricklayer/Block layer/Stonemason	24.46	8.81
Carpenter/Lather	24.63	11.24
Carpenter- Los Alamos County	27.80	13.19
Cement Mason	17.42	6.81
Ironworker	27.00	15.75
Painter- Commercial	17.00	6.88
Plumber/Pipefitter	30.76	11.62
Electricians- Outside Classifications: Zone 1		
Ground man	23.27	12.67
Equipment Operator	33.39	15.35
Lineman/ Technician	39.28	16.91
Cable Splicer	43.21	17.95
Electricians-Outside Classifications: Zone 2		
Ground man	23.27	12.67
Equipment Operator	33.39	15.35
Lineman/ Technician	39.28	16.91
Cable Splicer	43.21	17.95
Electricians-Outside Classifications: Los Alamos		
Ground man	23.94	12.85
Equipment Operator	34.35	15.60
Lineman/ Technician	40.41	17.21
Cable Splicer	44.45	18.28
Laborers		
Group I- Unskilled	12.26	6.22
Group II- Semi-Skilled	12.56	6.22
Group III- Skilled	12.96	6.22
Group IV- Specialty	13.21	6.22
Operators		

Group I	18.79	6.34
Group II	19.72	6.34
Group III	19.82	6.34
Group IV	19.93	6.34
Group V	20.03	6.34
Group VI	20.21	6.34
Group VII	20.37	6.34
Group VIII	20.66	6.34
Group IX	28.16	6.34
Group X	31.41	6.34
Truck Drivers		
Group I-IX	16.45	7.87

NOTE: All contractors are required to pay SUBSISTENCE, ZONE AND INCENTIVE PAY according to the particular trade. Details are located in a PDF attachment at WWW.DWS.STATE.NM.US. Search Labor Relations/Labor Information/Public Works/Prevailing Wage Rates.

For more information about the Subsistence, Zone, and Incentive Pay rates, or to file a wage claim, contact the Labor Relations Division at (505) 841-4400 or visit us online at www.dws.state.nm.us.

This document has important legal consequences; consultation with an attorney is encouraged with respect to its use or modification. This document should be adapted to the particular circumstances of the contemplated Project and the controlling Laws and Regulations.

STANDARD GENERAL CONDITIONS OF THE CONSTRUCTION CONTRACT

Prepared by

ENGINEERS JOINT CONTRACT DOCUMENTS COMMITTEE

and

Issued and Published Jointly by

AMERICAN COUNCIL OF ENGINEERING COMPANIES

ASSOCIATED GENERAL CONTRACTORS OF AMERICA

AMERICAN SOCIETY OF CIVIL ENGINEERS

PROFESSIONAL ENGINEERS IN PRIVATE PRACTICE
A Practice Division of the
NATIONAL SOCIETY OF PROFESSIONAL ENGINEERS

Endorsed by

CONSTRUCTION SPECIFICATIONS INSTITUTE

Copyright © 2007 National Society of Professional Engineers for EJCDC. All rights reserved.

These General Conditions have been prepared for use with the Suggested Forms of Agreement Between Owner and Contractor (EJCDC C-520 or C-525, 2007 Editions). Their provisions are interrelated and a change in one may necessitate a change in the other. Comments concerning their usage are contained in the Narrative Guide to the EJCDC Construction Documents (EJCDC C-001, 2007 Edition). For guidance in the preparation of Supplementary Conditions, see Guide to the Preparation of Supplementary Conditions (EJCDC C-800, 2007 Edition).

Copyright © 2007 National Society of Professional Engineers
1420 King Street, Alexandria, VA 22314-2794
(703) 684-2882
www.nspe.org

American Council of Engineering Companies
1015 15th Street N.W., Washington, DC 20005
(202) 347-7474
www.acec.org

American Society of Civil Engineers
1801 Alexander Bell Drive, Reston, VA 20191-4400
(800) 548-2723
www.asce.org

Associated General Contractors of America
2300 Wilson Boulevard, Suite 400, Arlington, VA 22201-3308
(703) 548-3118
www.agc.org

The copyright for this EJCDC document is owned jointly by the four
EJCDC sponsoring organizations and held in trust for their benefit by NSPE.

Copyright © 2007 National Society of Professional Engineers for EJCDC. All rights reserved.

STANDARD GENERAL CONDITIONS OF THE CONSTRUCTION CONTRACT

TABLE OF CONTENTS

Page

Article 1 – Definitions and Terminology 1
1.01 Defined Terms 1
1.02 Terminology 5

Article 2 – Preliminary Matters 6
2.01 Delivery of Bonds and Evidence of Insurance 6
2.02 Copies of Documents 6
2.03 Commencement of Contract Times; Notice to Proceed 6
2.04 Starting the Work 7
2.05 Before Starting Construction 7
2.06 Preconstruction Conference; Designation of Authorized Representatives 7
2.07 Initial Acceptance of Schedules 7

Article 3 – Contract Documents: Intent, Amending, Reuse 8
3.01 Intent 8
3.02 Reference Standards 8
3.03 Reporting and Resolving Discrepancies 8
3.04 Amending and Supplementing Contract Documents 9
3.05 Reuse of Documents 10
3.06 Electronic Data 10

Article 4 – Availability of Lands; Subsurface and Physical Conditions; Hazardous Environmental Conditions; Reference Points 10
4.01 Availability of Lands 10
4.02 Subsurface and Physical Conditions 11
4.03 Differing Subsurface or Physical Conditions 11
4.04 Underground Facilities 13
4.05 Reference Points 14
4.06 Hazardous Environmental Condition at Site 14

Article 5 – Bonds and Insurance 16
5.01 Performance, Payment, and Other Bonds 16
5.02 Licensed Sureties and Insurers 16
5.03 Certificates of Insurance 16
5.04 Contractor's Insurance 17
5.05 Owner's Liability Insurance 18
5.06 Property Insurance 18
5.07 Waiver of Rights 20
5.08 Receipt and Application of Insurance Proceeds 21

Copyright © 2007 National Society of Professional Engineers for EJCDC. All rights reserved.

5.09 Acceptance of Bonds and Insurance; Option to Replace 21
5.10 Partial Utilization, Acknowledgment of Property Insurer 21

Article 6 – Contractor's Responsibilities 22
6.01 Supervision and Superintendence 22
6.02 Labor; Working Hours 22
6.03 Services, Materials, and Equipment 22
6.04 Progress Schedule 23
6.05 Substitutes and "Or-Equals" 23
6.06 Concerning Subcontractors, Suppliers, and Others 25
6.07 Patent Fees and Royalties 27
6.08 Permits 27
6.09 Laws and Regulations 27
6.10 Taxes 28
6.11 Use of Site and Other Areas 28
6.12 Record Documents 29
6.13 Safety and Protection 29
6.14 Safety Representative 30
6.15 Hazard Communication Programs 30
6.16 Emergencies 30
6.17 Shop Drawings and Samples 30
6.18 Continuing the Work 32
6.19 Contractor's General Warranty and Guarantee 32
6.20 Indemnification 33
6.21 Delegation of Professional Design Services 34

Article 7 – Other Work at the Site 35
7.01 Related Work at Site 35
7.02 Coordination 35
7.03 Legal Relationships 36

Article 8 – Owner's Responsibilities 36
8.01 Communications to Contractor 36
8.02 Replacement of Engineer 36
8.03 Furnish Data 36
8.04 Pay When Due 36
8.05 Lands and Easements; Reports and Tests 36
8.06 Insurance 36
8.07 Change Orders 36
8.08 Inspections, Tests, and Approvals 37
8.09 Limitations on Owner's Responsibilities 37
8.10 Undisclosed Hazardous Environmental Condition 37
8.11 Evidence of Financial Arrangements 37
8.12 Compliance with Safety Program 37

Article 9 – Engineer's Status During Construction 37
9.01 Owner's Representative 37
9.02 Visits to Site 37

Copyright © 2007 National Society of Professional Engineers for EJCDC. All rights reserved.

9.03 Project Representative 38
9.04 Authorized Variations in Work 38
9.05 Rejecting Defective Work 38
9.06 Shop Drawings, Change Orders and Payments 38
9.07 Determinations for Unit Price Work 39
9.08 Decisions on Requirements of Contract Documents and Acceptability of Work 39
9.09 Limitations on Engineer's Authority and Responsibilities 39
9.10 Compliance with Safety Program 40

Article 10 – Changes in the Work; Claims 40
10.01 Authorized Changes in the Work 40
10.02 Unauthorized Changes in the Work 40
10.03 Execution of Change Orders 41
10.04 Notification to Surety 41
10.05 Claims 41

Article 11 – Cost of the Work; Allowances; Unit Price Work 42
11.01 Cost of the Work 42
11.02 Allowances 45
11.03 Unit Price Work 45

Article 12 – Change of Contract Price; Change of Contract Times 46
12.01 Change of Contract Price 46
12.02 Change of Contract Times 47
12.03 Delays 47

Article 13 – Tests and Inspections; Correction, Removal or Acceptance of Defective Work 48
13.01 Notice of Defects 48
13.02 Access to Work 48
13.03 Tests and Inspections 48
13.04 Uncovering Work 49
13.05 Owner May Stop the Work 50
13.06 Correction or Removal of Defective Work 50
13.07 Correction Period 50
13.08 Acceptance of Defective Work 51
13.09 Owner May Correct Defective Work 51

Article 14 – Payments to Contractor and Completion 52
14.01 Schedule of Values 52
14.02 Progress Payments 52
14.03 Contractor's Warranty of Title 55
14.04 Substantial Completion 55
14.05 Partial Utilization 56
14.06 Final Inspection 56
14.07 Final Payment 57
14.08 Final Completion Delayed 58
14.09 Waiver of Claims 58

Copyright © 2007 National Society of Professional Engineers for EJCDC. All rights reserved.

Article 15 – Suspension of Work and Termination 58
15.01 Owner May Suspend Work 58
15.02 Owner May Terminate for Cause 58
15.03 Owner May Terminate For Convenience 60
15.04 Contractor May Stop Work or Terminate 60

Article 16 – Dispute Resolution 61
16.01 Methods and Procedures 61

Article 17 – Miscellaneous 61
17.01 Giving Notice 61
17.02 Computation of Times 61
17.03 Cumulative Remedies 62
17.04 Survival of Obligations 62
17.05 Controlling Law 62
17.06 Headings 62

Copyright © 2007 National Society of Professional Engineers for EJCDC. All rights reserved.

ARTICLE 1 – DEFINITIONS AND TERMINOLOGY

1.01 *Defined Terms*

A. Wherever used in the Bidding Requirements or Contract Documents and printed with initial capital letters, the terms listed below will have the meanings indicated which are applicable to both the singular and plural thereof. In addition to terms specifically defined, terms with initial capital letters in the Contract Documents include references to identified articles and paragraphs, and the titles of other documents or forms.

1. *Addenda*—Written or graphic instruments issued prior to the opening of Bids which clarify, correct, or change the Bidding Requirements or the proposed Contract Documents.

2. *Agreement*—The written instrument which is evidence of the agreement between Owner and Contractor covering the Work.

3. *Application for Payment*—The form acceptable to Engineer which is to be used by Contractor during the course of the Work in requesting progress or final payments and which is to be accompanied by such supporting documentation as is required by the Contract Documents.

4. *Asbestos*—Any material that contains more than one percent asbestos and is friable or is releasing asbestos fibers into the air above current action levels established by the United States Occupational Safety and Health Administration.

5. *Bid*—The offer or proposal of a Bidder submitted on the prescribed form setting forth the prices for the Work to be performed.

6. *Bidder*—The individual or entity who submits a Bid directly to Owner.

7. *Bidding Documents*—The Bidding Requirements and the proposed Contract Documents (including all Addenda).

8. *Bidding Requirements*—The advertisement or invitation to bid, Instructions to Bidders, Bid security of acceptable form, if any, and the Bid Form with any supplements.

9. *Change Order*—A document recommended by Engineer which is signed by Contractor and Owner and authorizes an addition, deletion, or revision in the Work or an adjustment in the Contract Price or the Contract Times, issued on or after the Effective Date of the Agreement.

10. *Claim*—A demand or assertion by Owner or Contractor seeking an adjustment of Contract Price or Contract Times, or both, or other relief with respect to the terms of the Contract. A demand for money or services by a third party is not a Claim.

11. *Contract*—The entire and integrated written agreement between the Owner and Contractor concerning the Work. The Contract supersedes prior negotiations, representations, or agreements, whether written or oral.

Copyright © 2007 National Society of Professional Engineers for EJCDC. All rights reserved.

12. *Contract Documents*—Those items so designated in the Agreement. Only printed or hard copies of the items listed in the Agreement are Contract Documents. Approved Shop Drawings, other Contractor submittals, and the reports and drawings of subsurface and physical conditions are not Contract Documents.

13. *Contract Price*—The moneys payable by Owner to Contractor for completion of the Work in accordance with the Contract Documents as stated in the Agreement (subject to the provisions of Paragraph 11.03 in the case of Unit Price Work).

14. *Contract Times*—The number of days or the dates stated in the Agreement to: (i) achieve Milestones, if any; (ii) achieve Substantial Completion; and (iii) complete the Work so that it is ready for final payment as evidenced by Engineer's written recommendation of final payment.

15. *Contractor*—The individual or entity with whom Owner has entered into the Agreement.

16. *Cost of the Work*—See Paragraph 11.01 for definition.

17. *Drawings*—That part of the Contract Documents prepared or approved by Engineer which graphically shows the scope, extent, and character of the Work to be performed by Contractor. Shop Drawings and other Contractor submittals are not Drawings as so defined.

18. *Effective Date of the Agreement*—The date indicated in the Agreement on which it becomes effective, but if no such date is indicated, it means the date on which the Agreement is signed and delivered by the last of the two parties to sign and deliver.

19. *Engineer*—The individual or entity named as such in the Agreement.

20. *Field Order*—A written order issued by Engineer which requires minor changes in the Work but which does not involve a change in the Contract Price or the Contract Times.

21. *General Requirements*—Sections of Division 1 of the Specifications.

22. *Hazardous Environmental Condition*—The presence at the Site of Asbestos, PCBs, Petroleum, Hazardous Waste, or Radioactive Material in such quantities or circumstances that may present a substantial danger to persons or property exposed thereto.

23. *Hazardous Waste*—The term Hazardous Waste shall have the meaning provided in Section 1004 of the Solid Waste Disposal Act (42 USC Section 6903) as amended from time to time.

24. *Laws and Regulations; Laws or Regulations*—Any and all applicable laws, rules, regulations, ordinances, codes, and orders of any and all governmental bodies, agencies, authorities, and courts having jurisdiction.

25. *Liens*—Charges, security interests, or encumbrances upon Project funds, real property, or personal property.

26. *Milestone*—A principal event specified in the Contract Documents relating to an intermediate completion date or time prior to Substantial Completion of all the Work.

Copyright © 2007 National Society of Professional Engineers for EJCDC. All rights reserved.

27. *Notice of Award*—The written notice by Owner to the Successful Bidder stating that upon timely compliance by the Successful Bidder with the conditions precedent listed therein, Owner will sign and deliver the Agreement.

28. *Notice to Proceed*—A written notice given by Owner to Contractor fixing the date on which the Contract Times will commence to run and on which Contractor shall start to perform the Work under the Contract Documents.

29. *Owner*—The individual or entity with whom Contractor has entered into the Agreement and for whom the Work is to be performed.

30. *PCBs*—Polychlorinated biphenyls.

31. *Petroleum*—Petroleum, including crude oil or any fraction thereof which is liquid at standard conditions of temperature and pressure (60 degrees Fahrenheit and 14.7 pounds per square inch absolute), such as oil, petroleum, fuel oil, oil sludge, oil refuse, gasoline, kerosene, and oil mixed with other non-Hazardous Waste and crude oils.

32. *Progress Schedule*—A schedule, prepared and maintained by Contractor, describing the sequence and duration of the activities comprising the Contractor's plan to accomplish the Work within the Contract Times.

33. *Project*—The total construction of which the Work to be performed under the Contract Documents may be the whole, or a part.

34. *Project Manual*—The bound documentary information prepared for bidding and constructing the Work. A listing of the contents of the Project Manual, which may be bound in one or more volumes, is contained in the table(s) of contents.

35. *Radioactive Material*—Source, special nuclear, or byproduct material as defined by the Atomic Energy Act of 1954 (42 USC Section 2011 et seq.) as amended from time to time.

36. *Resident Project Representative*—The authorized representative of Engineer who may be assigned to the Site or any part thereof.

37. *Samples*—Physical examples of materials, equipment, or workmanship that are representative of some portion of the Work and which establish the standards by which such portion of the Work will be judged.

38. *Schedule of Submittals*—A schedule, prepared and maintained by Contractor, of required submittals and the time requirements to support scheduled performance of related construction activities.

39. *Schedule of Values*—A schedule, prepared and maintained by Contractor, allocating portions of the Contract Price to various portions of the Work and used as the basis for reviewing Contractor's Applications for Payment.

Copyright © 2007 National Society of Professional Engineers for EJCDC. All rights reserved.

40. *Shop Drawings*—All drawings, diagrams, illustrations, schedules, and other data or information which are specifically prepared or assembled by or for Contractor and submitted by Contractor to illustrate some portion of the Work.

41. *Site*—Lands or areas indicated in the Contract Documents as being furnished by Owner upon which the Work is to be performed, including rights-of-way and easements for access thereto, and such other lands furnished by Owner which are designated for the use of Contractor.

42. *Specifications*—That part of the Contract Documents consisting of written requirements for materials, equipment, systems, standards and workmanship as applied to the Work, and certain administrative requirements and procedural matters applicable thereto.

43. *Subcontractor*—An individual or entity having a direct contract with Contractor or with any other Subcontractor for the performance of a part of the Work at the Site.

44. *Substantial Completion*—The time at which the Work (or a specified part thereof) has progressed to the point where, in the opinion of Engineer, the Work (or a specified part thereof) is sufficiently complete, in accordance with the Contract Documents, so that the Work (or a specified part thereof) can be utilized for the purposes for which it is intended. The terms "substantially complete" and "substantially completed" as applied to all or part of the Work refer to Substantial Completion thereof.

45. *Successful Bidder*—The Bidder submitting a responsive Bid to whom Owner makes an award.

46. *Supplementary Conditions*—That part of the Contract Documents which amends or supplements these General Conditions.

47. *Supplier*—A manufacturer, fabricator, supplier, distributor, materialman, or vendor having a direct contract with Contractor or with any Subcontractor to furnish materials or equipment to be incorporated in the Work by Contractor or Subcontractor.

48. *Underground Facilities*—All underground pipelines, conduits, ducts, cables, wires, manholes, vaults, tanks, tunnels, or other such facilities or attachments, and any encasements containing such facilities, including those that convey electricity, gases, steam, liquid petroleum products, telephone or other communications, cable television, water, wastewater, storm water, other liquids or chemicals, or traffic or other control systems.

49. *Unit Price Work*—Work to be paid for on the basis of unit prices.

50. *Work*—The entire construction or the various separately identifiable parts thereof required to be provided under the Contract Documents. Work includes and is the result of performing or providing all labor, services, and documentation necessary to produce such construction, and furnishing, installing, and incorporating all materials and equipment into such construction, all as required by the Contract Documents.

51. *Work Change Directive*—A written statement to Contractor issued on or after the Effective Date of the Agreement and signed by Owner and recommended by Engineer ordering an

Copyright © 2007 National Society of Professional Engineers for EJCDC. All rights reserved.

addition, deletion, or revision in the Work, or responding to differing or unforeseen subsurface or physical conditions under which the Work is to be performed or to emergencies. A Work Change Directive will not change the Contract Price or the Contract Times but is evidence that the parties expect that the change ordered or documented by a Work Change Directive will be incorporated in a subsequently issued Change Order following negotiations by the parties as to its effect, if any, on the Contract Price or Contract Times.

1.02 *Terminology*

A. The words and terms discussed in Paragraph 1.02.B through F are not defined but, when used in the Bidding Requirements or Contract Documents, have the indicated meaning.

B. *Intent of Certain Terms or Adjectives:*

1. The Contract Documents include the terms "as allowed," "as approved," "as ordered," "as directed" or terms of like effect or import to authorize an exercise of professional judgment by Engineer. In addition, the adjectives "reasonable," "suitable," "acceptable," "proper," "satisfactory," or adjectives of like effect or import are used to describe an action or determination of Engineer as to the Work. It is intended that such exercise of professional judgment, action, or determination will be solely to evaluate, in general, the Work for compliance with the information in the Contract Documents and with the design concept of the Project as a functioning whole as shown or indicated in the Contract Documents (unless there is a specific statement indicating otherwise). The use of any such term or adjective is not intended to and shall not be effective to assign to Engineer any duty or authority to supervise or direct the performance of the Work, or any duty or authority to undertake responsibility contrary to the provisions of Paragraph 9.09 or any other provision of the Contract Documents.

C. *Day:*

1. The word "day" means a calendar day of 24 hours measured from midnight to the next midnight.

D. *Defective:*

1. The word "defective," when modifying the word "Work," refers to Work that is unsatisfactory, faulty, or deficient in that it:

a. does not conform to the Contract Documents; or

b. does not meet the requirements of any applicable inspection, reference standard, test, or approval referred to in the Contract Documents; or

c. has been damaged prior to Engineer's recommendation of final payment (unless responsibility for the protection thereof has been assumed by Owner at Substantial Completion in accordance with Paragraph 14.04 or 14.05).

E. *Furnish, Install, Perform, Provide:*

Copyright © 2007 National Society of Professional Engineers for EJCDC. All rights reserved.

1. The word "furnish," when used in connection with services, materials, or equipment, shall mean to supply and deliver said services, materials, or equipment to the Site (or some other specified location) ready for use or installation and in usable or operable condition.

2. The word "install," when used in connection with services, materials, or equipment, shall mean to put into use or place in final position said services, materials, or equipment complete and ready for intended use.

3. The words "perform" or "provide," when used in connection with services, materials, or equipment, shall mean to furnish and install said services, materials, or equipment complete and ready for intended use.

4. When "furnish," "install," "perform," or "provide" is not used in connection with services, materials, or equipment in a context clearly requiring an obligation of Contractor, "provide" is implied.

F. Unless stated otherwise in the Contract Documents, words or phrases that have a well-known technical or construction industry or trade meaning are used in the Contract Documents in accordance with such recognized meaning.

ARTICLE 2 – PRELIMINARY MATTERS

2.01 *Delivery of Bonds and Evidence of Insurance*

A. When Contractor delivers the executed counterparts of the Agreement to Owner, Contractor shall also deliver to Owner such bonds as Contractor may be required to furnish.

B. *Evidence of Insurance:* Before any Work at the Site is started, Contractor and Owner shall each deliver to the other, with copies to each additional insured identified in the Supplementary Conditions, certificates of insurance (and other evidence of insurance which either of them or any additional insured may reasonably request) which Contractor and Owner respectively are required to purchase and maintain in accordance with Article 5.

2.02 *Copies of Documents*

A. Owner shall furnish to Contractor up to ten printed or hard copies of the Drawings and Project Manual. Additional copies will be furnished upon request at the cost of reproduction.

2.03 *Commencement of Contract Times; Notice to Proceed*

A. The Contract Times will commence to run on the thirtieth day after the Effective Date of the Agreement or, if a Notice to Proceed is given, on the day indicated in the Notice to Proceed. A Notice to Proceed may be given at any time within 30 days after the Effective Date of the Agreement. In no event will the Contract Times commence to run later than the sixtieth day after the day of Bid opening or the thirtieth day after the Effective Date of the Agreement, whichever date is earlier.

Copyright © 2007 National Society of Professional Engineers for EJCDC. All rights reserved.

2.04 *Starting the Work*

A. Contractor shall start to perform the Work on the date when the Contract Times commence to run. No Work shall be done at the Site prior to the date on which the Contract Times commence to run.

2.05 *Before Starting Construction*

A. *Preliminary Schedules:* Within 10 days after the Effective Date of the Agreement (unless otherwise specified in the General Requirements), Contractor shall submit to Engineer for timely review:

1. a preliminary Progress Schedule indicating the times (numbers of days or dates) for starting and completing the various stages of the Work, including any Milestones specified in the Contract Documents;

2. a preliminary Schedule of Submittals; and

3. a preliminary Schedule of Values for all of the Work which includes quantities and prices of items which when added together equal the Contract Price and subdivides the Work into component parts in sufficient detail to serve as the basis for progress payments during performance of the Work. Such prices will include an appropriate amount of overhead and profit applicable to each item of Work.

2.06 *Preconstruction Conference; Designation of Authorized Representatives*

A. Before any Work at the Site is started, a conference attended by Owner, Contractor, Engineer, and others as appropriate will be held to establish a working understanding among the parties as to the Work and to discuss the schedules referred to in Paragraph 2.05.A, procedures for handling Shop Drawings and other submittals, processing Applications for Payment, and maintaining required records.

B. At this conference Owner and Contractor each shall designate, in writing, a specific individual to act as its authorized representative with respect to the services and responsibilities under the Contract. Such individuals shall have the authority to transmit instructions, receive information, render decisions relative to the Contract, and otherwise act on behalf of each respective party.

2.07 *Initial Acceptance of Schedules*

A. At least 10 days before submission of the first Application for Payment a conference attended by Contractor, Engineer, and others as appropriate will be held to review for acceptability to Engineer as provided below the schedules submitted in accordance with Paragraph 2.05.A. Contractor shall have an additional 10 days to make corrections and adjustments and to complete and resubmit the schedules. No progress payment shall be made to Contractor until acceptable schedules are submitted to Engineer.

1. The Progress Schedule will be acceptable to Engineer if it provides an orderly progression of the Work to completion within the Contract Times. Such acceptance will not impose on Engineer responsibility for the Progress Schedule, for sequencing, scheduling, or progress of

Copyright © 2007 National Society of Professional Engineers for EJCDC. All rights reserved.

the Work, nor interfere with or relieve Contractor from Contractor's full responsibility therefor.

2. Contractor's Schedule of Submittals will be acceptable to Engineer if it provides a workable arrangement for reviewing and processing the required submittals.

3. Contractor's Schedule of Values will be acceptable to Engineer as to form and substance if it provides a reasonable allocation of the Contract Price to component parts of the Work.

ARTICLE 3 – CONTRACT DOCUMENTS: INTENT, AMENDING, REUSE

3.01 *Intent*

A. The Contract Documents are complementary; what is required by one is as binding as if required by all.

B. It is the intent of the Contract Documents to describe a functionally complete project (or part thereof) to be constructed in accordance with the Contract Documents. Any labor, documentation, services, materials, or equipment that reasonably may be inferred from the Contract Documents or from prevailing custom or trade usage as being required to produce the indicated result will be provided whether or not specifically called for, at no additional cost to Owner.

C. Clarifications and interpretations of the Contract Documents shall be issued by Engineer as provided in Article 9.

3.02 *Reference Standards*

A. Standards, Specifications, Codes, Laws, and Regulations

1. Reference to standards, specifications, manuals, or codes of any technical society, organization, or association, or to Laws or Regulations, whether such reference be specific or by implication, shall mean the standard, specification, manual, code, or Laws or Regulations in effect at the time of opening of Bids (or on the Effective Date of the Agreement if there were no Bids), except as may be otherwise specifically stated in the Contract Documents.

2. No provision of any such standard, specification, manual, or code, or any instruction of a Supplier, shall be effective to change the duties or responsibilities of Owner, Contractor, or Engineer, or any of their subcontractors, consultants, agents, or employees, from those set forth in the Contract Documents. No such provision or instruction shall be effective to assign to Owner, Engineer, or any of their officers, directors, members, partners, employees, agents, consultants, or subcontractors, any duty or authority to supervise or direct the performance of the Work or any duty or authority to undertake responsibility inconsistent with the provisions of the Contract Documents.

3.03 *Reporting and Resolving Discrepancies*

A. *Reporting Discrepancies:*

Copyright © 2007 National Society of Professional Engineers for EJCDC. All rights reserved.

1. *Contractor's Review of Contract Documents Before Starting Work*: Before undertaking each part of the Work, Contractor shall carefully study and compare the Contract Documents and check and verify pertinent figures therein and all applicable field measurements. Contractor shall promptly report in writing to Engineer any conflict, error, ambiguity, or discrepancy which Contractor discovers, or has actual knowledge of, and shall obtain a written interpretation or clarification from Engineer before proceeding with any Work affected thereby.

2. *Contractor's Review of Contract Documents During Performance of Work*: If, during the performance of the Work, Contractor discovers any conflict, error, ambiguity, or discrepancy within the Contract Documents, or between the Contract Documents and (a) any applicable Law or Regulation , (b) any standard, specification, manual, or code, or (c) any instruction of any Supplier, then Contractor shall promptly report it to Engineer in writing. Contractor shall not proceed with the Work affected thereby (except in an emergency as required by Paragraph 6.16.A) until an amendment or supplement to the Contract Documents has been issued by one of the methods indicated in Paragraph 3.04.

3. Contractor shall not be liable to Owner or Engineer for failure to report any conflict, error, ambiguity, or discrepancy in the Contract Documents unless Contractor had actual knowledge thereof.

B. *Resolving Discrepancies:*

1. Except as may be otherwise specifically stated in the Contract Documents, the provisions of the Contract Documents shall take precedence in resolving any conflict, error, ambiguity, or discrepancy between the provisions of the Contract Documents and:

   a. the provisions of any standard, specification, manual, or code, or the instruction of any Supplier (whether or not specifically incorporated by reference in the Contract Documents); or

   b. the provisions of any Laws or Regulations applicable to the performance of the Work (unless such an interpretation of the provisions of the Contract Documents would result in violation of such Law or Regulation).

3.04 *Amending and Supplementing Contract Documents*

A. The Contract Documents may be amended to provide for additions, deletions, and revisions in the Work or to modify the terms and conditions thereof by either a Change Order or a Work Change Directive.

B. The requirements of the Contract Documents may be supplemented, and minor variations and deviations in the Work may be authorized, by one or more of the following ways:

1. A Field Order;

2. Engineer's approval of a Shop Drawing or Sample (subject to the provisions of Paragraph 6.17.D.3); or

Copyright © 2007 National Society of Professional Engineers for EJCDC. All rights reserved.

3. Engineer's written interpretation or clarification.

3.05 *Reuse of Documents*

A. Contractor and any Subcontractor or Supplier shall not:

1. have or acquire any title to or ownership rights in any of the Drawings, Specifications, or other documents (or copies of any thereof) prepared by or bearing the seal of Engineer or its consultants, including electronic media editions; or

2. reuse any such Drawings, Specifications, other documents, or copies thereof on extensions of the Project or any other project without written consent of Owner and Engineer and specific written verification or adaptation by Engineer.

B. The prohibitions of this Paragraph 3.05 will survive final payment, or termination of the Contract. Nothing herein shall preclude Contractor from retaining copies of the Contract Documents for record purposes.

3.06 *Electronic Data*

A. Unless otherwise stated in the Supplementary Conditions, the data furnished by Owner or Engineer to Contractor, or by Contractor to Owner or Engineer, that may be relied upon are limited to the printed copies (also known as hard copies). Files in electronic media format of text, data, graphics, or other types are furnished only for the convenience of the receiving party. Any conclusion or information obtained or derived from such electronic files will be at the user's sole risk. If there is a discrepancy between the electronic files and the hard copies, the hard copies govern.

B. Because data stored in electronic media format can deteriorate or be modified inadvertently or otherwise without authorization of the data's creator, the party receiving electronic files agrees that it will perform acceptance tests or procedures within 60 days, after which the receiving party shall be deemed to have accepted the data thus transferred. Any errors detected within the 60-day acceptance period will be corrected by the transferring party.

C. When transferring documents in electronic media format, the transferring party makes no representations as to long term compatibility, usability, or readability of documents resulting from the use of software application packages, operating systems, or computer hardware differing from those used by the data's creator.

ARTICLE 4 – AVAILABILITY OF LANDS; SUBSURFACE AND PHYSICAL CONDITIONS; HAZARDOUS ENVIRONMENTAL CONDITIONS; REFERENCE POINTS

4.01 *Availability of Lands*

A. Owner shall furnish the Site. Owner shall notify Contractor of any encumbrances or restrictions not of general application but specifically related to use of the Site with which Contractor must comply in performing the Work. Owner will obtain in a timely manner and pay for easements for permanent structures or permanent changes in existing facilities. If Contractor and Owner are unable to agree on entitlement to or on the amount or extent, if any, of any adjustment in the

Copyright © 2007 National Society of Professional Engineers for EJCDC. All rights reserved.

Contract Price or Contract Times, or both, as a result of any delay in Owner's furnishing the Site or a part thereof, Contractor may make a Claim therefor as provided in Paragraph 10.05.

B. Upon reasonable written request, Owner shall furnish Contractor with a current statement of record legal title and legal description of the lands upon which the Work is to be performed and Owner's interest therein as necessary for giving notice of or filing a mechanic's or construction lien against such lands in accordance with applicable Laws and Regulations.

C. Contractor shall provide for all additional lands and access thereto that may be required for temporary construction facilities or storage of materials and equipment.

4.02 *Subsurface and Physical Conditions*

A. *Reports and Drawings:* The Supplementary Conditions identify:

1. those reports known to Owner of explorations and tests of subsurface conditions at or contiguous to the Site; and

2. those drawings known to Owner of physical conditions relating to existing surface or subsurface structures at the Site (except Underground Facilities).

B. *Limited Reliance by Contractor on Technical Data Authorized:* Contractor may rely upon the accuracy of the "technical data" contained in such reports and drawings, but such reports and drawings are not Contract Documents. Such "technical data" is identified in the Supplementary Conditions. Except for such reliance on such "technical data," Contractor may not rely upon or make any claim against Owner or Engineer, or any of their officers, directors, members, partners, employees, agents, consultants, or subcontractors with respect to:

1. the completeness of such reports and drawings for Contractor's purposes, including, but not limited to, any aspects of the means, methods, techniques, sequences, and procedures of construction to be employed by Contractor, and safety precautions and programs incident thereto; or

2. other data, interpretations, opinions, and information contained in such reports or shown or indicated in such drawings; or

3. any Contractor interpretation of or conclusion drawn from any "technical data" or any such other data, interpretations, opinions, or information.

4.03 *Differing Subsurface or Physical Conditions*

A. *Notice:* If Contractor believes that any subsurface or physical condition that is uncovered or revealed either:

1. is of such a nature as to establish that any "technical data" on which Contractor is entitled to rely as provided in Paragraph 4.02 is materially inaccurate; or

2. is of such a nature as to require a change in the Contract Documents; or

Copyright © 2007 National Society of Professional Engineers for EJCDC. All rights reserved.

3. differs materially from that shown or indicated in the Contract Documents; or

4. is of an unusual nature, and differs materially from conditions ordinarily encountered and generally recognized as inherent in work of the character provided for in the Contract Documents;

then Contractor shall, promptly after becoming aware thereof and before further disturbing the subsurface or physical conditions or performing any Work in connection therewith (except in an emergency as required by Paragraph 6.16.A), notify Owner and Engineer in writing about such condition. Contractor shall not further disturb such condition or perform any Work in connection therewith (except as aforesaid) until receipt of written order to do so.

B. *Engineer's Review*: After receipt of written notice as required by Paragraph 4.03.A, Engineer will promptly review the pertinent condition, determine the necessity of Owner's obtaining additional exploration or tests with respect thereto, and advise Owner in writing (with a copy to Contractor) of Engineer's findings and conclusions.

C. *Possible Price and Times Adjustments:*

1. The Contract Price or the Contract Times, or both, will be equitably adjusted to the extent that the existence of such differing subsurface or physical condition causes an increase or decrease in Contractor's cost of, or time required for, performance of the Work; subject, however, to the following:

   a. such condition must meet any one or more of the categories described in Paragraph 4.03.A; and

   b. with respect to Work that is paid for on a unit price basis, any adjustment in Contract Price will be subject to the provisions of Paragraphs 9.07 and 11.03.

2. Contractor shall not be entitled to any adjustment in the Contract Price or Contract Times if:

   a. Contractor knew of the existence of such conditions at the time Contractor made a final commitment to Owner with respect to Contract Price and Contract Times by the submission of a Bid or becoming bound under a negotiated contract; or

   b. the existence of such condition could reasonably have been discovered or revealed as a result of any examination, investigation, exploration, test, or study of the Site and contiguous areas required by the Bidding Requirements or Contract Documents to be conducted by or for Contractor prior to Contractor's making such final commitment; or

   c. Contractor failed to give the written notice as required by Paragraph 4.03.A.

3. If Owner and Contractor are unable to agree on entitlement to or on the amount or extent, if any, of any adjustment in the Contract Price or Contract Times, or both, a Claim may be made therefor as provided in Paragraph 10.05. However, neither Owner or Engineer, or any of their officers, directors, members, partners, employees, agents, consultants, or subcontractors shall be liable to Contractor for any claims, costs, losses, or damages (including but not limited to all fees and charges of engineers, architects, attorneys, and other

Copyright © 2007 National Society of Professional Engineers for EJCDC. All rights reserved.

professionals and all court or arbitration or other dispute resolution costs) sustained by Contractor on or in connection with any other project or anticipated project.

4.04 *Underground Facilities*

A. *Shown or Indicated:* The information and data shown or indicated in the Contract Documents with respect to existing Underground Facilities at or contiguous to the Site is based on information and data furnished to Owner or Engineer by the owners of such Underground Facilities, including Owner, or by others. Unless it is otherwise expressly provided in the Supplementary Conditions:

1. Owner and Engineer shall not be responsible for the accuracy or completeness of any such information or data provided by others; and

2. the cost of all of the following will be included in the Contract Price, and Contractor shall have full responsibility for:

   a. reviewing and checking all such information and data;

   b. locating all Underground Facilities shown or indicated in the Contract Documents;

   c. coordination of the Work with the owners of such Underground Facilities, including Owner, during construction; and

   d. the safety and protection of all such Underground Facilities and repairing any damage thereto resulting from the Work.

B. *Not Shown or Indicated:*

1. If an Underground Facility is uncovered or revealed at or contiguous to the Site which was not shown or indicated, or not shown or indicated with reasonable accuracy in the Contract Documents, Contractor shall, promptly after becoming aware thereof and before further disturbing conditions affected thereby or performing any Work in connection therewith (except in an emergency as required by Paragraph 6.16.A), identify the owner of such Underground Facility and give written notice to that owner and to Owner and Engineer. Engineer will promptly review the Underground Facility and determine the extent, if any, to which a change is required in the Contract Documents to reflect and document the consequences of the existence or location of the Underground Facility. During such time, Contractor shall be responsible for the safety and protection of such Underground Facility.

2. If Engineer concludes that a change in the Contract Documents is required, a Work Change Directive or a Change Order will be issued to reflect and document such consequences. An equitable adjustment shall be made in the Contract Price or Contract Times, or both, to the extent that they are attributable to the existence or location of any Underground Facility that was not shown or indicated or not shown or indicated with reasonable accuracy in the Contract Documents and that Contractor did not know of and could not reasonably have been expected to be aware of or to have anticipated. If Owner and Contractor are unable to agree on entitlement to or on the amount or extent, if any, of any such adjustment in Contract Price

Copyright © 2007 National Society of Professional Engineers for EJCDC. All rights reserved.

or Contract Times, Owner or Contractor may make a Claim therefor as provided in Paragraph 10.05.

4.05 *Reference Points*

A. Owner shall provide engineering surveys to establish reference points for construction which in Engineer's judgment are necessary to enable Contractor to proceed with the Work. Contractor shall be responsible for laying out the Work, shall protect and preserve the established reference points and property monuments, and shall make no changes or relocations without the prior written approval of Owner. Contractor shall report to Engineer whenever any reference point or property monument is lost or destroyed or requires relocation because of necessary changes in grades or locations, and shall be responsible for the accurate replacement or relocation of such reference points or property monuments by professionally qualified personnel.

4.06 *Hazardous Environmental Condition at Site*

A. *Reports and Drawings:* The Supplementary Conditions identify those reports and drawings known to Owner relating to Hazardous Environmental Conditions that have been identified at the Site.

B. *Limited Reliance by Contractor on Technical Data Authorized:* Contractor may rely upon the accuracy of the "technical data" contained in such reports and drawings, but such reports and drawings are not Contract Documents. Such "technical data" is identified in the Supplementary Conditions. Except for such reliance on such "technical data," Contractor may not rely upon or make any claim against Owner or Engineer, or any of their officers, directors, members, partners, employees, agents, consultants, or subcontractors with respect to:

1. the completeness of such reports and drawings for Contractor's purposes, including, but not limited to, any aspects of the means, methods, techniques, sequences and procedures of construction to be employed by Contractor and safety precautions and programs incident thereto; or

2. other data, interpretations, opinions and information contained in such reports or shown or indicated in such drawings; or

3. any Contractor interpretation of or conclusion drawn from any "technical data" or any such other data, interpretations, opinions or information.

C. Contractor shall not be responsible for any Hazardous Environmental Condition uncovered or revealed at the Site which was not shown or indicated in Drawings or Specifications or identified in the Contract Documents to be within the scope of the Work. Contractor shall be responsible for a Hazardous Environmental Condition created with any materials brought to the Site by Contractor, Subcontractors, Suppliers, or anyone else for whom Contractor is responsible.

D. If Contractor encounters a Hazardous Environmental Condition or if Contractor or anyone for whom Contractor is responsible creates a Hazardous Environmental Condition, Contractor shall immediately: (i) secure or otherwise isolate such condition; (ii) stop all Work in connection with such condition and in any area affected thereby (except in an emergency as required by

Copyright © 2007 National Society of Professional Engineers for EJCDC. All rights reserved.

Paragraph 6.16.A); and (iii) notify Owner and Engineer (and promptly thereafter confirm such notice in writing). Owner shall promptly consult with Engineer concerning the necessity for Owner to retain a qualified expert to evaluate such condition or take corrective action, if any. Promptly after consulting with Engineer, Owner shall take such actions as are necessary to permit Owner to timely obtain required permits and provide Contractor the written notice required by Paragraph 4.06.E.

E. Contractor shall not be required to resume Work in connection with such condition or in any affected area until after Owner has obtained any required permits related thereto and delivered written notice to Contractor: (i) specifying that such condition and any affected area is or has been rendered safe for the resumption of Work; or (ii) specifying any special conditions under which such Work may be resumed safely. If Owner and Contractor cannot agree as to entitlement to or on the amount or extent, if any, of any adjustment in Contract Price or Contract Times, or both, as a result of such Work stoppage or such special conditions under which Work is agreed to be resumed by Contractor, either party may make a Claim therefor as provided in Paragraph 10.05.

F. If after receipt of such written notice Contractor does not agree to resume such Work based on a reasonable belief it is unsafe, or does not agree to resume such Work under such special conditions, then Owner may order the portion of the Work that is in the area affected by such condition to be deleted from the Work. If Owner and Contractor cannot agree as to entitlement to or on the amount or extent, if any, of an adjustment in Contract Price or Contract Times as a result of deleting such portion of the Work, then either party may make a Claim therefor as provided in Paragraph 10.05. Owner may have such deleted portion of the Work performed by Owner's own forces or others in accordance with Article 7.

G. To the fullest extent permitted by Laws and Regulations, Owner shall indemnify and hold harmless Contractor, Subcontractors, and Engineer, and the officers, directors, members, partners, employees, agents, consultants, and subcontractors of each and any of them from and against all claims, costs, losses, and damages (including but not limited to all fees and charges of engineers, architects, attorneys, and other professionals and all court or arbitration or other dispute resolution costs) arising out of or relating to a Hazardous Environmental Condition, provided that such Hazardous Environmental Condition: (i) was not shown or indicated in the Drawings or Specifications or identified in the Contract Documents to be included within the scope of the Work, and (ii) was not created by Contractor or by anyone for whom Contractor is responsible. Nothing in this Paragraph 4.06.G shall obligate Owner to indemnify any individual or entity from and against the consequences of that individual's or entity's own negligence.

H. To the fullest extent permitted by Laws and Regulations, Contractor shall indemnify and hold harmless Owner and Engineer, and the officers, directors, members, partners, employees, agents, consultants, and subcontractors of each and any of them from and against all claims, costs, losses, and damages (including but not limited to all fees and charges of engineers, architects, attorneys, and other professionals and all court or arbitration or other dispute resolution costs) arising out of or relating to a Hazardous Environmental Condition created by Contractor or by anyone for whom Contractor is responsible. Nothing in this Paragraph 4.06.H shall obligate Contractor to indemnify any individual or entity from and against the consequences of that individual's or entity's own negligence.

Copyright © 2007 National Society of Professional Engineers for EJCDC. All rights reserved.

I. The provisions of Paragraphs 4.02, 4.03, and 4.04 do not apply to a Hazardous Environmental Condition uncovered or revealed at the Site.

ARTICLE 5 – BONDS AND INSURANCE

5.01 *Performance, Payment, and Other Bonds*

A. Contractor shall furnish performance and payment bonds, each in an amount at least equal to the Contract Price as security for the faithful performance and payment of all of Contractor's obligations under the Contract Documents. These bonds shall remain in effect until one year after the date when final payment becomes due or until completion of the correction period specified in Paragraph 13.07, whichever is later, except as provided otherwise by Laws or Regulations or by the Contract Documents. Contractor shall also furnish such other bonds as are required by the Contract Documents.

B. All bonds shall be in the form prescribed by the Contract Documents except as provided otherwise by Laws or Regulations, and shall be executed by such sureties as are named in the list of "Companies Holding Certificates of Authority as Acceptable Sureties on Federal Bonds and as Acceptable Reinsuring Companies" as published in Circular 570 (amended) by the Financial Management Service, Surety Bond Branch, U.S. Department of the Treasury. All bonds signed by an agent or attorney-in-fact must be accompanied by a certified copy of that individual's authority to bind the surety. The evidence of authority shall show that it is effective on the date the agent or attorney-in-fact signed each bond.

C. If the surety on any bond furnished by Contractor is declared bankrupt or becomes insolvent or its right to do business is terminated in any state where any part of the Project is located or it ceases to meet the requirements of Paragraph 5.01.B, Contractor shall promptly notify Owner and Engineer and shall, within 20 days after the event giving rise to such notification, provide another bond and surety, both of which shall comply with the requirements of Paragraphs 5.01.B and 5.02.

5.02 *Licensed Sureties and Insurers*

A. All bonds and insurance required by the Contract Documents to be purchased and maintained by Owner or Contractor shall be obtained from surety or insurance companies that are duly licensed or authorized in the jurisdiction in which the Project is located to issue bonds or insurance policies for the limits and coverages so required. Such surety and insurance companies shall also meet such additional requirements and qualifications as may be provided in the Supplementary Conditions.

5.03 *Certificates of Insurance*

A. Contractor shall deliver to Owner, with copies to each additional insured and loss payee identified in the Supplementary Conditions, certificates of insurance (and other evidence of insurance requested by Owner or any other additional insured) which Contractor is required to purchase and maintain.

Copyright © 2007 National Society of Professional Engineers for EJCDC. All rights reserved.

B. Owner shall deliver to Contractor, with copies to each additional insured and loss payee identified in the Supplementary Conditions, certificates of insurance (and other evidence of insurance requested by Contractor or any other additional insured) which Owner is required to purchase and maintain.

C. Failure of Owner to demand such certificates or other evidence of Contractor's full compliance with these insurance requirements or failure of Owner to identify a deficiency in compliance from the evidence provided shall not be construed as a waiver of Contractor's obligation to maintain such insurance.

D. Owner does not represent that insurance coverage and limits established in this Contract necessarily will be adequate to protect Contractor.

E. The insurance and insurance limits required herein shall not be deemed as a limitation on Contractor's liability under the indemnities granted to Owner in the Contract Documents.

5.04 *Contractor's Insurance*

A. Contractor shall purchase and maintain such insurance as is appropriate for the Work being performed and as will provide protection from claims set forth below which may arise out of or result from Contractor's performance of the Work and Contractor's other obligations under the Contract Documents, whether it is to be performed by Contractor, any Subcontractor or Supplier, or by anyone directly or indirectly employed by any of them to perform any of the Work, or by anyone for whose acts any of them may be liable:

1. claims under workers' compensation, disability benefits, and other similar employee benefit acts;

2. claims for damages because of bodily injury, occupational sickness or disease, or death of Contractor's employees;

3. claims for damages because of bodily injury, sickness or disease, or death of any person other than Contractor's employees;

4. claims for damages insured by reasonably available personal injury liability coverage which are sustained:

   a. by any person as a result of an offense directly or indirectly related to the employment of such person by Contractor, or

   b. by any other person for any other reason;

5. claims for damages, other than to the Work itself, because of injury to or destruction of tangible property wherever located, including loss of use resulting therefrom; and

6. claims for damages because of bodily injury or death of any person or property damage arising out of the ownership, maintenance or use of any motor vehicle.

B. The policies of insurance required by this Paragraph 5.04 shall:

Copyright © 2007 National Society of Professional Engineers for EJCDC. All rights reserved.

1. with respect to insurance required by Paragraphs 5.04.A.3 through 5.04.A.6 inclusive, be written on an occurrence basis, include as additional insureds (subject to any customary exclusion regarding professional liability) Owner and Engineer, and any other individuals or entities identified in the Supplementary Conditions, all of whom shall be listed as additional insureds, and include coverage for the respective officers, directors, members, partners, employees, agents, consultants, and subcontractors of each and any of all such additional insureds, and the insurance afforded to these additional insureds shall provide primary coverage for all claims covered thereby;

2. include at least the specific coverages and be written for not less than the limits of liability provided in the Supplementary Conditions or required by Laws or Regulations, whichever is greater;

3. include contractual liability insurance covering Contractor's indemnity obligations under Paragraphs 6.11 and 6.20;

4. contain a provision or endorsement that the coverage afforded will not be canceled, materially changed or renewal refused until at least 30 days prior written notice has been given to Owner and Contractor and to each other additional insured identified in the Supplementary Conditions to whom a certificate of insurance has been issued (and the certificates of insurance furnished by the Contractor pursuant to Paragraph 5.03 will so provide);

5. remain in effect at least until final payment and at all times thereafter when Contractor may be correcting, removing, or replacing defective Work in accordance with Paragraph 13.07; and

6. include completed operations coverage:

   a. Such insurance shall remain in effect for two years after final payment.

   b. Contractor shall furnish Owner and each other additional insured identified in the Supplementary Conditions, to whom a certificate of insurance has been issued, evidence satisfactory to Owner and any such additional insured of continuation of such insurance at final payment and one year thereafter.

5.05 *Owner's Liability Insurance*

A. In addition to the insurance required to be provided by Contractor under Paragraph 5.04, Owner, at Owner's option, may purchase and maintain at Owner's expense Owner's own liability insurance as will protect Owner against claims which may arise from operations under the Contract Documents.

5.06 *Property Insurance*

A. Unless otherwise provided in the Supplementary Conditions, Owner shall purchase and maintain property insurance upon the Work at the Site in the amount of the full replacement cost thereof (subject to such deductible amounts as may be provided in the Supplementary Conditions or required by Laws and Regulations). This insurance shall:

Copyright © 2007 National Society of Professional Engineers for EJCDC. All rights reserved.

1. include the interests of Owner, Contractor, Subcontractors, and Engineer, and any other individuals or entities identified in the Supplementary Conditions, and the officers, directors, members, partners, employees, agents, consultants, and subcontractors of each and any of them, each of whom is deemed to have an insurable interest and shall be listed as a loss payee;

2. be written on a Builder's Risk "all-risk" policy form that shall at least include insurance for physical loss or damage to the Work, temporary buildings, falsework, and materials and equipment in transit, and shall insure against at least the following perils or causes of loss: fire, lightning, extended coverage, theft, vandalism and malicious mischief, earthquake, collapse, debris removal, demolition occasioned by enforcement of Laws and Regulations, water damage (other than that caused by flood), and such other perils or causes of loss as may be specifically required by the Supplementary Conditions.

3. include expenses incurred in the repair or replacement of any insured property (including but not limited to fees and charges of engineers and architects);

4. cover materials and equipment stored at the Site or at another location that was agreed to in writing by Owner prior to being incorporated in the Work, provided that such materials and equipment have been included in an Application for Payment recommended by Engineer;

5. allow for partial utilization of the Work by Owner;

6. include testing and startup; and

7. be maintained in effect until final payment is made unless otherwise agreed to in writing by Owner, Contractor, and Engineer with 30 days written notice to each other loss payee to whom a certificate of insurance has been issued.

B. Owner shall purchase and maintain such equipment breakdown insurance or additional property insurance as may be required by the Supplementary Conditions or Laws and Regulations which will include the interests of Owner, Contractor, Subcontractors, and Engineer, and any other individuals or entities identified in the Supplementary Conditions, and the officers, directors, members, partners, employees, agents, consultants and subcontractors of each and any of them, each of whom is deemed to have an insurable interest and shall be listed as a loss payee.

C. All the policies of insurance (and the certificates or other evidence thereof) required to be purchased and maintained in accordance with this Paragraph 5.06 will contain a provision or endorsement that the coverage afforded will not be canceled or materially changed or renewal refused until at least 30 days prior written notice has been given to Owner and Contractor and to each other loss payee to whom a certificate of insurance has been issued and will contain waiver provisions in accordance with Paragraph 5.07.

D. Owner shall not be responsible for purchasing and maintaining any property insurance specified in this Paragraph 5.06 to protect the interests of Contractor, Subcontractors, or others in the Work to the extent of any deductible amounts that are identified in the Supplementary Conditions. The risk of loss within such identified deductible amount will be borne by Contractor, Subcontractors, or others suffering any such loss, and if any of them wishes property

Copyright © 2007 National Society of Professional Engineers for EJCDC. All rights reserved.

insurance coverage within the limits of such amounts, each may purchase and maintain it at the purchaser's own expense.

E. If Contractor requests in writing that other special insurance be included in the property insurance policies provided under this Paragraph 5.06, Owner shall, if possible, include such insurance, and the cost thereof will be charged to Contractor by appropriate Change Order. Prior to commencement of the Work at the Site, Owner shall in writing advise Contractor whether or not such other insurance has been procured by Owner.

5.07 *Waiver of Rights*

A. Owner and Contractor intend that all policies purchased in accordance with Paragraph 5.06 will protect Owner, Contractor, Subcontractors, and Engineer, and all other individuals or entities identified in the Supplementary Conditions as loss payees (and the officers, directors, members, partners, employees, agents, consultants, and subcontractors of each and any of them) in such policies and will provide primary coverage for all losses and damages caused by the perils or causes of loss covered thereby. All such policies shall contain provisions to the effect that in the event of payment of any loss or damage the insurers will have no rights of recovery against any of the insureds or loss payees thereunder. Owner and Contractor waive all rights against each other and their respective officers, directors, members, partners, employees, agents, consultants and subcontractors of each and any of them for all losses and damages caused by, arising out of or resulting from any of the perils or causes of loss covered by such policies and any other property insurance applicable to the Work; and, in addition, waive all such rights against Subcontractors and Engineer, and all other individuals or entities identified in the Supplementary Conditions as loss payees (and the officers, directors, members, partners, employees, agents, consultants, and subcontractors of each and any of them) under such policies for losses and damages so caused. None of the above waivers shall extend to the rights that any party making such waiver may have to the proceeds of insurance held by Owner as trustee or otherwise payable under any policy so issued.

B. Owner waives all rights against Contractor, Subcontractors, and Engineer, and the officers, directors, members, partners, employees, agents, consultants and subcontractors of each and any of them for:

1. loss due to business interruption, loss of use, or other consequential loss extending beyond direct physical loss or damage to Owner's property or the Work caused by, arising out of, or resulting from fire or other perils whether or not insured by Owner; and

2. loss or damage to the completed Project or part thereof caused by, arising out of, or resulting from fire or other insured peril or cause of loss covered by any property insurance maintained on the completed Project or part thereof by Owner during partial utilization pursuant to Paragraph 14.05, after Substantial Completion pursuant to Paragraph 14.04, or after final payment pursuant to Paragraph 14.07.

C. Any insurance policy maintained by Owner covering any loss, damage or consequential loss referred to in Paragraph 5.07.B shall contain provisions to the effect that in the event of payment of any such loss, damage, or consequential loss, the insurers will have no rights of recovery

Copyright © 2007 National Society of Professional Engineers for EJCDC. All rights reserved.

against Contractor, Subcontractors, or Engineer, and the officers, directors, members, partners, employees, agents, consultants and subcontractors of each and any of them.

5.08 *Receipt and Application of Insurance Proceeds*

A. Any insured loss under the policies of insurance required by Paragraph 5.06 will be adjusted with Owner and made payable to Owner as fiduciary for the loss payees, as their interests may appear, subject to the requirements of any applicable mortgage clause and of Paragraph 5.08.B. Owner shall deposit in a separate account any money so received and shall distribute it in accordance with such agreement as the parties in interest may reach. If no other special agreement is reached, the damaged Work shall be repaired or replaced, the moneys so received applied on account thereof, and the Work and the cost thereof covered by an appropriate Change Order.

B. Owner as fiduciary shall have power to adjust and settle any loss with the insurers unless one of the parties in interest shall object in writing within 15 days after the occurrence of loss to Owner's exercise of this power. If such objection be made, Owner as fiduciary shall make settlement with the insurers in accordance with such agreement as the parties in interest may reach. If no such agreement among the parties in interest is reached, Owner as fiduciary shall adjust and settle the loss with the insurers and, if required in writing by any party in interest, Owner as fiduciary shall give bond for the proper performance of such duties.

5.09 *Acceptance of Bonds and Insurance; Option to Replace*

A. If either Owner or Contractor has any objection to the coverage afforded by or other provisions of the bonds or insurance required to be purchased and maintained by the other party in accordance with Article 5 on the basis of non-conformance with the Contract Documents, the objecting party shall so notify the other party in writing within 10 days after receipt of the certificates (or other evidence requested) required by Paragraph 2.01.B. Owner and Contractor shall each provide to the other such additional information in respect of insurance provided as the other may reasonably request. If either party does not purchase or maintain all of the bonds and insurance required of such party by the Contract Documents, such party shall notify the other party in writing of such failure to purchase prior to the start of the Work, or of such failure to maintain prior to any change in the required coverage. Without prejudice to any other right or remedy, the other party may elect to obtain equivalent bonds or insurance to protect such other party's interests at the expense of the party who was required to provide such coverage, and a Change Order shall be issued to adjust the Contract Price accordingly.

5.10 *Partial Utilization, Acknowledgment of Property Insurer*

A. If Owner finds it necessary to occupy or use a portion or portions of the Work prior to Substantial Completion of all the Work as provided in Paragraph 14.05, no such use or occupancy shall commence before the insurers providing the property insurance pursuant to Paragraph 5.06 have acknowledged notice thereof and in writing effected any changes in coverage necessitated thereby. The insurers providing the property insurance shall consent by endorsement on the policy or policies, but the property insurance shall not be canceled or permitted to lapse on account of any such partial use or occupancy.

Copyright © 2007 National Society of Professional Engineers for EJCDC. All rights reserved.

ARTICLE 6 – CONTRACTOR'S RESPONSIBILITIES

6.01 *Supervision and Superintendence*

A. Contractor shall supervise, inspect, and direct the Work competently and efficiently, devoting such attention thereto and applying such skills and expertise as may be necessary to perform the Work in accordance with the Contract Documents. Contractor shall be solely responsible for the means, methods, techniques, sequences, and procedures of construction. Contractor shall not be responsible for the negligence of Owner or Engineer in the design or specification of a specific means, method, technique, sequence, or procedure of construction which is shown or indicated in and expressly required by the Contract Documents.

B. At all times during the progress of the Work, Contractor shall assign a competent resident superintendent who shall not be replaced without written notice to Owner and Engineer except under extraordinary circumstances.

6.02 *Labor; Working Hours*

A. Contractor shall provide competent, suitably qualified personnel to survey and lay out the Work and perform construction as required by the Contract Documents. Contractor shall at all times maintain good discipline and order at the Site.

B. Except as otherwise required for the safety or protection of persons or the Work or property at the Site or adjacent thereto, and except as otherwise stated in the Contract Documents, all Work at the Site shall be performed during regular working hours. Contractor will not permit the performance of Work on a Saturday, Sunday, or any legal holiday without Owner's written consent (which will not be unreasonably withheld) given after prior written notice to Engineer.

6.03 *Services, Materials, and Equipment*

A. Unless otherwise specified in the Contract Documents, Contractor shall provide and assume full responsibility for all services, materials, equipment, labor, transportation, construction equipment and machinery, tools, appliances, fuel, power, light, heat, telephone, water, sanitary facilities, temporary facilities, and all other facilities and incidentals necessary for the performance, testing, start-up, and completion of the Work.

B. All materials and equipment incorporated into the Work shall be as specified or, if not specified, shall be of good quality and new, except as otherwise provided in the Contract Documents. All special warranties and guarantees required by the Specifications shall expressly run to the benefit of Owner. If required by Engineer, Contractor shall furnish satisfactory evidence (including reports of required tests) as to the source, kind, and quality of materials and equipment.

C. All materials and equipment shall be stored, applied, installed, connected, erected, protected, used, cleaned, and conditioned in accordance with instructions of the applicable Supplier, except as otherwise may be provided in the Contract Documents.

Copyright © 2007 National Society of Professional Engineers for EJCDC. All rights reserved.

6.04 *Progress Schedule*

A. Contractor shall adhere to the Progress Schedule established in accordance with Paragraph 2.07 as it may be adjusted from time to time as provided below.

1. Contractor shall submit to Engineer for acceptance (to the extent indicated in Paragraph 2.07) proposed adjustments in the Progress Schedule that will not result in changing the Contract Times. Such adjustments will comply with any provisions of the General Requirements applicable thereto.

2. Proposed adjustments in the Progress Schedule that will change the Contract Times shall be submitted in accordance with the requirements of Article 12. Adjustments in Contract Times may only be made by a Change Order.

6.05 *Substitutes and "Or-Equals"*

A. Whenever an item of material or equipment is specified or described in the Contract Documents by using the name of a proprietary item or the name of a particular Supplier, the specification or description is intended to establish the type, function, appearance, and quality required. Unless the specification or description contains or is followed by words reading that no like, equivalent, or "or-equal" item or no substitution is permitted, other items of material or equipment or material or equipment of other Suppliers may be submitted to Engineer for review under the circumstances described below.

1. *"Or-Equal" Items:* If in Engineer's sole discretion an item of material or equipment proposed by Contractor is functionally equal to that named and sufficiently similar so that no change in related Work will be required, it may be considered by Engineer as an "or-equal" item, in which case review and approval of the proposed item may, in Engineer's sole discretion, be accomplished without compliance with some or all of the requirements for approval of proposed substitute items. For the purposes of this Paragraph 6.05.A.1, a proposed item of material or equipment will be considered functionally equal to an item so named if:

a. in the exercise of reasonable judgment Engineer determines that:

1) it is at least equal in materials of construction, quality, durability, appearance, strength, and design characteristics;

2) it will reliably perform at least equally well the function and achieve the results imposed by the design concept of the completed Project as a functioning whole; and

3) it has a proven record of performance and availability of responsive service.

b. Contractor certifies that, if approved and incorporated into the Work:

1) there will be no increase in cost to the Owner or increase in Contract Times; and

2) it will conform substantially to the detailed requirements of the item named in the Contract Documents.

Copyright © 2007 National Society of Professional Engineers for EJCDC. All rights reserved.

2. *Substitute Items:*

   a. If in Engineer's sole discretion an item of material or equipment proposed by Contractor does not qualify as an "or-equal" item under Paragraph 6.05.A.1, it will be considered a proposed substitute item.

   b. Contractor shall submit sufficient information as provided below to allow Engineer to determine if the item of material or equipment proposed is essentially equivalent to that named and an acceptable substitute therefor. Requests for review of proposed substitute items of material or equipment will not be accepted by Engineer from anyone other than Contractor.

   c. The requirements for review by Engineer will be as set forth in Paragraph 6.05.A.2.d, as supplemented by the General Requirements, and as Engineer may decide is appropriate under the circumstances.

   d. Contractor shall make written application to Engineer for review of a proposed substitute item of material or equipment that Contractor seeks to furnish or use. The application:

      1) shall certify that the proposed substitute item will:

         a) perform adequately the functions and achieve the results called for by the general design,

         b) be similar in substance to that specified, and

         c) be suited to the same use as that specified;

      2) will state:

         a) the extent, if any, to which the use of the proposed substitute item will prejudice Contractor's achievement of Substantial Completion on time,

         b) whether use of the proposed substitute item in the Work will require a change in any of the Contract Documents (or in the provisions of any other direct contract with Owner for other work on the Project) to adapt the design to the proposed substitute item, and

         c) whether incorporation or use of the proposed substitute item in connection with the Work is subject to payment of any license fee or royalty;

      3) will identify:

         a) all variations of the proposed substitute item from that specified, and

         b) available engineering, sales, maintenance, repair, and replacement services; and

Copyright © 2007 National Society of Professional Engineers for EJCDC. All rights reserved.

4) shall contain an itemized estimate of all costs or credits that will result directly or indirectly from use of such substitute item, including costs of redesign and claims of other contractors affected by any resulting change.

B. *Substitute Construction Methods or Procedures:* If a specific means, method, technique, sequence, or procedure of construction is expressly required by the Contract Documents, Contractor may furnish or utilize a substitute means, method, technique, sequence, or procedure of construction approved by Engineer. Contractor shall submit sufficient information to allow Engineer, in Engineer's sole discretion, to determine that the substitute proposed is equivalent to that expressly called for by the Contract Documents. The requirements for review by Engineer will be similar to those provided in Paragraph 6.05.A.2.

C. *Engineer's Evaluation:* Engineer will be allowed a reasonable time within which to evaluate each proposal or submittal made pursuant to Paragraphs 6.05.A and 6.05.B. Engineer may require Contractor to furnish additional data about the proposed substitute item. Engineer will be the sole judge of acceptability. No "or equal" or substitute will be ordered, installed or utilized until Engineer's review is complete, which will be evidenced by a Change Order in the case of a substitute and an approved Shop Drawing for an "or equal." Engineer will advise Contractor in writing of any negative determination.

D. *Special Guarantee:* Owner may require Contractor to furnish at Contractor's expense a special performance guarantee or other surety with respect to any substitute.

E. *Engineer's Cost Reimbursement*: Engineer will record Engineer's costs in evaluating a substitute proposed or submitted by Contractor pursuant to Paragraphs 6.05.A.2 and 6.05.B. Whether or not Engineer approves a substitute so proposed or submitted by Contractor, Contractor shall reimburse Owner for the reasonable charges of Engineer for evaluating each such proposed substitute. Contractor shall also reimburse Owner for the reasonable charges of Engineer for making changes in the Contract Documents (or in the provisions of any other direct contract with Owner) resulting from the acceptance of each proposed substitute.

F. *Contractor's Expense*: Contractor shall provide all data in support of any proposed substitute or "or-equal" at Contractor's expense.

6.06 *Concerning Subcontractors, Suppliers, and Others*

A. Contractor shall not employ any Subcontractor, Supplier, or other individual or entity (including those acceptable to Owner as indicated in Paragraph 6.06.B), whether initially or as a replacement, against whom Owner may have reasonable objection. Contractor shall not be required to employ any Subcontractor, Supplier, or other individual or entity to furnish or perform any of the Work against whom Contractor has reasonable objection.

B. If the Supplementary Conditions require the identity of certain Subcontractors, Suppliers, or other individuals or entities to be submitted to Owner in advance for acceptance by Owner by a specified date prior to the Effective Date of the Agreement, and if Contractor has submitted a list thereof in accordance with the Supplementary Conditions, Owner's acceptance (either in writing or by failing to make written objection thereto by the date indicated for acceptance or objection in the Bidding Documents or the Contract Documents) of any such Subcontractor, Supplier, or

Copyright © 2007 National Society of Professional Engineers for EJCDC. All rights reserved.

other individual or entity so identified may be revoked on the basis of reasonable objection after due investigation. Contractor shall submit an acceptable replacement for the rejected Subcontractor, Supplier, or other individual or entity, and the Contract Price will be adjusted by the difference in the cost occasioned by such replacement, and an appropriate Change Order will be issued. No acceptance by Owner of any such Subcontractor, Supplier, or other individual or entity, whether initially or as a replacement, shall constitute a waiver of any right of Owner or Engineer to reject defective Work.

C. Contractor shall be fully responsible to Owner and Engineer for all acts and omissions of the Subcontractors, Suppliers, and other individuals or entities performing or furnishing any of the Work just as Contractor is responsible for Contractor's own acts and omissions. Nothing in the Contract Documents:

1. shall create for the benefit of any such Subcontractor, Supplier, or other individual or entity any contractual relationship between Owner or Engineer and any such Subcontractor, Supplier or other individual or entity; nor

2. shall create any obligation on the part of Owner or Engineer to pay or to see to the payment of any moneys due any such Subcontractor, Supplier, or other individual or entity except as may otherwise be required by Laws and Regulations.

D. Contractor shall be solely responsible for scheduling and coordinating the Work of Subcontractors, Suppliers, and other individuals or entities performing or furnishing any of the Work under a direct or indirect contract with Contractor.

E. Contractor shall require all Subcontractors, Suppliers, and such other individuals or entities performing or furnishing any of the Work to communicate with Engineer through Contractor.

F. The divisions and sections of the Specifications and the identifications of any Drawings shall not control Contractor in dividing the Work among Subcontractors or Suppliers or delineating the Work to be performed by any specific trade.

G. All Work performed for Contractor by a Subcontractor or Supplier will be pursuant to an appropriate agreement between Contractor and the Subcontractor or Supplier which specifically binds the Subcontractor or Supplier to the applicable terms and conditions of the Contract Documents for the benefit of Owner and Engineer. Whenever any such agreement is with a Subcontractor or Supplier who is listed as a loss payee on the property insurance provided in Paragraph 5.06, the agreement between the Contractor and the Subcontractor or Supplier will contain provisions whereby the Subcontractor or Supplier waives all rights against Owner, Contractor, Engineer, and all other individuals or entities identified in the Supplementary Conditions to be listed as insureds or loss payees (and the officers, directors, members, partners, employees, agents, consultants, and subcontractors of each and any of them) for all losses and damages caused by, arising out of, relating to, or resulting from any of the perils or causes of loss covered by such policies and any other property insurance applicable to the Work. If the insurers on any such policies require separate waiver forms to be signed by any Subcontractor or Supplier, Contractor will obtain the same.

Copyright © 2007 National Society of Professional Engineers for EJCDC. All rights reserved.

6.07 *Patent Fees and Royalties*

A. Contractor shall pay all license fees and royalties and assume all costs incident to the use in the performance of the Work or the incorporation in the Work of any invention, design, process, product, or device which is the subject of patent rights or copyrights held by others. If a particular invention, design, process, product, or device is specified in the Contract Documents for use in the performance of the Work and if, to the actual knowledge of Owner or Engineer, its use is subject to patent rights or copyrights calling for the payment of any license fee or royalty to others, the existence of such rights shall be disclosed by Owner in the Contract Documents.

B. To the fullest extent permitted by Laws and Regulations, Owner shall indemnify and hold harmless Contractor, and its officers, directors, members, partners, employees, agents, consultants, and subcontractors from and against all claims, costs, losses, and damages (including but not limited to all fees and charges of engineers, architects, attorneys, and other professionals, and all court or arbitration or other dispute resolution costs) arising out of or relating to any infringement of patent rights or copyrights incident to the use in the performance of the Work or resulting from the incorporation in the Work of any invention, design, process, product, or device specified in the Contract Documents, but not identified as being subject to payment of any license fee or royalty to others required by patent rights or copyrights.

C. To the fullest extent permitted by Laws and Regulations, Contractor shall indemnify and hold harmless Owner and Engineer, and the officers, directors, members, partners, employees, agents, consultants and subcontractors of each and any of them from and against all claims, costs, losses, and damages (including but not limited to all fees and charges of engineers, architects, attorneys, and other professionals and all court or arbitration or other dispute resolution costs) arising out of or relating to any infringement of patent rights or copyrights incident to the use in the performance of the Work or resulting from the incorporation in the Work of any invention, design, process, product, or device not specified in the Contract Documents.

6.08 *Permits*

A. Unless otherwise provided in the Supplementary Conditions, Contractor shall obtain and pay for all construction permits and licenses. Owner shall assist Contractor, when necessary, in obtaining such permits and licenses. Contractor shall pay all governmental charges and inspection fees necessary for the prosecution of the Work which are applicable at the time of opening of Bids, or, if there are no Bids, on the Effective Date of the Agreement. Owner shall pay all charges of utility owners for connections for providing permanent service to the Work.

6.09 *Laws and Regulations*

A. Contractor shall give all notices required by and shall comply with all Laws and Regulations applicable to the performance of the Work. Except where otherwise expressly required by applicable Laws and Regulations, neither Owner nor Engineer shall be responsible for monitoring Contractor's compliance with any Laws or Regulations.

B. If Contractor performs any Work knowing or having reason to know that it is contrary to Laws or Regulations, Contractor shall bear all claims, costs, losses, and damages (including but not limited to all fees and charges of engineers, architects, attorneys, and other professionals and all

Copyright © 2007 National Society of Professional Engineers for EJCDC. All rights reserved.

court or arbitration or other dispute resolution costs) arising out of or relating to such Work. However, it shall not be Contractor's responsibility to make certain that the Specifications and Drawings are in accordance with Laws and Regulations, but this shall not relieve Contractor of Contractor's obligations under Paragraph 3.03.

C. Changes in Laws or Regulations not known at the time of opening of Bids (or, on the Effective Date of the Agreement if there were no Bids) having an effect on the cost or time of performance of the Work shall be the subject of an adjustment in Contract Price or Contract Times. If Owner and Contractor are unable to agree on entitlement to or on the amount or extent, if any, of any such adjustment, a Claim may be made therefor as provided in Paragraph 10.05.

6.10 *Taxes*

A. Contractor shall pay all sales, consumer, use, and other similar taxes required to be paid by Contractor in accordance with the Laws and Regulations of the place of the Project which are applicable during the performance of the Work.

6.11 *Use of Site and Other Areas*

A. *Limitation on Use of Site and Other Areas:*

1. Contractor shall confine construction equipment, the storage of materials and equipment, and the operations of workers to the Site and other areas permitted by Laws and Regulations, and shall not unreasonably encumber the Site and other areas with construction equipment or other materials or equipment. Contractor shall assume full responsibility for any damage to any such land or area, or to the owner or occupant thereof, or of any adjacent land or areas resulting from the performance of the Work.

2. Should any claim be made by any such owner or occupant because of the performance of the Work, Contractor shall promptly settle with such other party by negotiation or otherwise resolve the claim by arbitration or other dispute resolution proceeding or at law.

3. To the fullest extent permitted by Laws and Regulations, Contractor shall indemnify and hold harmless Owner and Engineer, and the officers, directors, members, partners, employees, agents, consultants and subcontractors of each and any of them from and against all claims, costs, losses, and damages (including but not limited to all fees and charges of engineers, architects, attorneys, and other professionals and all court or arbitration or other dispute resolution costs) arising out of or relating to any claim or action, legal or equitable, brought by any such owner or occupant against Owner, Engineer, or any other party indemnified hereunder to the extent caused by or based upon Contractor's performance of the Work.

B. *Removal of Debris During Performance of the Work:* During the progress of the Work Contractor shall keep the Site and other areas free from accumulations of waste materials, rubbish, and other debris. Removal and disposal of such waste materials, rubbish, and other debris shall conform to applicable Laws and Regulations.

C. *Cleaning:* Prior to Substantial Completion of the Work Contractor shall clean the Site and the Work and make it ready for utilization by Owner. At the completion of the Work Contractor

Copyright © 2007 National Society of Professional Engineers for EJCDC. All rights reserved.

shall remove from the Site all tools, appliances, construction equipment and machinery, and surplus materials and shall restore to original condition all property not designated for alteration by the Contract Documents.

D. *Loading Structures:* Contractor shall not load nor permit any part of any structure to be loaded in any manner that will endanger the structure, nor shall Contractor subject any part of the Work or adjacent property to stresses or pressures that will endanger it.

6.12 *Record Documents*

A. Contractor shall maintain in a safe place at the Site one record copy of all Drawings, Specifications, Addenda, Change Orders, Work Change Directives, Field Orders, and written interpretations and clarifications in good order and annotated to show changes made during construction. These record documents together with all approved Samples and a counterpart of all approved Shop Drawings will be available to Engineer for reference. Upon completion of the Work, these record documents, Samples, and Shop Drawings will be delivered to Engineer for Owner.

6.13 *Safety and Protection*

A. Contractor shall be solely responsible for initiating, maintaining and supervising all safety precautions and programs in connection with the Work. Such responsibility does not relieve Subcontractors of their responsibility for the safety of persons or property in the performance of their work, nor for compliance with applicable safety Laws and Regulations. Contractor shall take all necessary precautions for the safety of, and shall provide the necessary protection to prevent damage, injury or loss to:

1. all persons on the Site or who may be affected by the Work;

2. all the Work and materials and equipment to be incorporated therein, whether in storage on or off the Site; and

3. other property at the Site or adjacent thereto, including trees, shrubs, lawns, walks, pavements, roadways, structures, utilities, and Underground Facilities not designated for removal, relocation, or replacement in the course of construction.

B. Contractor shall comply with all applicable Laws and Regulations relating to the safety of persons or property, or to the protection of persons or property from damage, injury, or loss; and shall erect and maintain all necessary safeguards for such safety and protection. Contractor shall notify owners of adjacent property and of Underground Facilities and other utility owners when prosecution of the Work may affect them, and shall cooperate with them in the protection, removal, relocation, and replacement of their property.

C. Contractor shall comply with the applicable requirements of Owner's safety programs, if any. The Supplementary Conditions identify any Owner's safety programs that are applicable to the Work.

Copyright © 2007 National Society of Professional Engineers for EJCDC. All rights reserved.

D. Contractor shall inform Owner and Engineer of the specific requirements of Contractor's safety program with which Owner's and Engineer's employees and representatives must comply while at the Site.

E. All damage, injury, or loss to any property referred to in Paragraph 6.13.A.2 or 6.13.A.3 caused, directly or indirectly, in whole or in part, by Contractor, any Subcontractor, Supplier, or any other individual or entity directly or indirectly employed by any of them to perform any of the Work, or anyone for whose acts any of them may be liable, shall be remedied by Contractor (except damage or loss attributable to the fault of Drawings or Specifications or to the acts or omissions of Owner or Engineer or anyone employed by any of them, or anyone for whose acts any of them may be liable, and not attributable, directly or indirectly, in whole or in part, to the fault or negligence of Contractor or any Subcontractor, Supplier, or other individual or entity directly or indirectly employed by any of them).

F. Contractor's duties and responsibilities for safety and for protection of the Work shall continue until such time as all the Work is completed and Engineer has issued a notice to Owner and Contractor in accordance with Paragraph 14.07.B that the Work is acceptable (except as otherwise expressly provided in connection with Substantial Completion).

6.14 *Safety Representative*

A. Contractor shall designate a qualified and experienced safety representative at the Site whose duties and responsibilities shall be the prevention of accidents and the maintaining and supervising of safety precautions and programs.

6.15 *Hazard Communication Programs*

A. Contractor shall be responsible for coordinating any exchange of material safety data sheets or other hazard communication information required to be made available to or exchanged between or among employers at the Site in accordance with Laws or Regulations.

6.16 *Emergencies*

A. In emergencies affecting the safety or protection of persons or the Work or property at the Site or adjacent thereto, Contractor is obligated to act to prevent threatened damage, injury, or loss. Contractor shall give Engineer prompt written notice if Contractor believes that any significant changes in the Work or variations from the Contract Documents have been caused thereby or are required as a result thereof. If Engineer determines that a change in the Contract Documents is required because of the action taken by Contractor in response to such an emergency, a Work Change Directive or Change Order will be issued.

6.17 *Shop Drawings and Samples*

A. Contractor shall submit Shop Drawings and Samples to Engineer for review and approval in accordance with the accepted Schedule of Submittals (as required by Paragraph 2.07). Each submittal will be identified as Engineer may require.

Copyright © 2007 National Society of Professional Engineers for EJCDC. All rights reserved.

1. *Shop Drawings:*

   a. Submit number of copies specified in the General Requirements.

   b. Data shown on the Shop Drawings will be complete with respect to quantities, dimensions, specified performance and design criteria, materials, and similar data to show Engineer the services, materials, and equipment Contractor proposes to provide and to enable Engineer to review the information for the limited purposes required by Paragraph 6.17.D.

2. *Samples:*

   a. Submit number of Samples specified in the Specifications.

   b. Clearly identify each Sample as to material, Supplier, pertinent data such as catalog numbers, the use for which intended and other data as Engineer may require to enable Engineer to review the submittal for the limited purposes required by Paragraph 6.17.D.

B. Where a Shop Drawing or Sample is required by the Contract Documents or the Schedule of Submittals, any related Work performed prior to Engineer's review and approval of the pertinent submittal will be at the sole expense and responsibility of Contractor.

C. *Submittal Procedures:*

1. Before submitting each Shop Drawing or Sample, Contractor shall have:

   a. reviewed and coordinated each Shop Drawing or Sample with other Shop Drawings and Samples and with the requirements of the Work and the Contract Documents;

   b. determined and verified all field measurements, quantities, dimensions, specified performance and design criteria, installation requirements, materials, catalog numbers, and similar information with respect thereto;

   c. determined and verified the suitability of all materials offered with respect to the indicated application, fabrication, shipping, handling, storage, assembly, and installation pertaining to the performance of the Work; and

   d. determined and verified all information relative to Contractor's responsibilities for means, methods, techniques, sequences, and procedures of construction, and safety precautions and programs incident thereto.

2. Each submittal shall bear a stamp or specific written certification that Contractor has satisfied Contractor's obligations under the Contract Documents with respect to Contractor's review and approval of that submittal.

3. With each submittal, Contractor shall give Engineer specific written notice of any variations that the Shop Drawing or Sample may have from the requirements of the Contract Documents. This notice shall be both a written communication separate from the Shop

Copyright © 2007 National Society of Professional Engineers for EJCDC. All rights reserved.

Drawings or Sample submittal; and, in addition, by a specific notation made on each Shop Drawing or Sample submitted to Engineer for review and approval of each such variation.

D. *Engineer's Review:*

1. Engineer will provide timely review of Shop Drawings and Samples in accordance with the Schedule of Submittals acceptable to Engineer. Engineer's review and approval will be only to determine if the items covered by the submittals will, after installation or incorporation in the Work, conform to the information given in the Contract Documents and be compatible with the design concept of the completed Project as a functioning whole as indicated by the Contract Documents.

2. Engineer's review and approval will not extend to means, methods, techniques, sequences, or procedures of construction (except where a particular means, method, technique, sequence, or procedure of construction is specifically and expressly called for by the Contract Documents) or to safety precautions or programs incident thereto. The review and approval of a separate item as such will not indicate approval of the assembly in which the item functions.

3. Engineer's review and approval shall not relieve Contractor from responsibility for any variation from the requirements of the Contract Documents unless Contractor has complied with the requirements of Paragraph 6.17.C.3 and Engineer has given written approval of each such variation by specific written notation thereof incorporated in or accompanying the Shop Drawing or Sample. Engineer's review and approval shall not relieve Contractor from responsibility for complying with the requirements of Paragraph 6.17.C.1.

E. *Resubmittal Procedures:*

1. Contractor shall make corrections required by Engineer and shall return the required number of corrected copies of Shop Drawings and submit, as required, new Samples for review and approval. Contractor shall direct specific attention in writing to revisions other than the corrections called for by Engineer on previous submittals.

6.18 *Continuing the Work*

A. Contractor shall carry on the Work and adhere to the Progress Schedule during all disputes or disagreements with Owner. No Work shall be delayed or postponed pending resolution of any disputes or disagreements, except as permitted by Paragraph 15.04 or as Owner and Contractor may otherwise agree in writing.

6.19 *Contractor's General Warranty and Guarantee*

A. Contractor warrants and guarantees to Owner that all Work will be in accordance with the Contract Documents and will not be defective. Engineer and its officers, directors, members, partners, employees, agents, consultants, and subcontractors shall be entitled to rely on representation of Contractor's warranty and guarantee.

B. Contractor's warranty and guarantee hereunder excludes defects or damage caused by:

Copyright © 2007 National Society of Professional Engineers for EJCDC. All rights reserved.

1. abuse, modification, or improper maintenance or operation by persons other than Contractor, Subcontractors, Suppliers, or any other individual or entity for whom Contractor is responsible; or

2. normal wear and tear under normal usage.

C. Contractor's obligation to perform and complete the Work in accordance with the Contract Documents shall be absolute. None of the following will constitute an acceptance of Work that is not in accordance with the Contract Documents or a release of Contractor's obligation to perform the Work in accordance with the Contract Documents:

1. observations by Engineer;

2. recommendation by Engineer or payment by Owner of any progress or final payment;

3. the issuance of a certificate of Substantial Completion by Engineer or any payment related thereto by Owner;

4. use or occupancy of the Work or any part thereof by Owner;

5. any review and approval of a Shop Drawing or Sample submittal or the issuance of a notice of acceptability by Engineer;

6. any inspection, test, or approval by others; or

7. any correction of defective Work by Owner.

6.20 *Indemnification*

A. To the fullest extent permitted by Laws and Regulations, Contractor shall indemnify and hold harmless Owner and Engineer, and the officers, directors, members, partners, employees, agents, consultants and subcontractors of each and any of them from and against all claims, costs, losses, and damages (including but not limited to all fees and charges of engineers, architects, attorneys, and other professionals and all court or arbitration or other dispute resolution costs) arising out of or relating to the performance of the Work, provided that any such claim, cost, loss, or damage is attributable to bodily injury, sickness, disease, or death, or to injury to or destruction of tangible property (other than the Work itself), including the loss of use resulting therefrom but only to the extent caused by any negligent act or omission of Contractor, any Subcontractor, any Supplier, or any individual or entity directly or indirectly employed by any of them to perform any of the Work or anyone for whose acts any of them may be liable .

B. In any and all claims against Owner or Engineer or any of their officers, directors, members, partners, employees, agents, consultants, or subcontractors by any employee (or the survivor or personal representative of such employee) of Contractor, any Subcontractor, any Supplier, or any individual or entity directly or indirectly employed by any of them to perform any of the Work, or anyone for whose acts any of them may be liable, the indemnification obligation under Paragraph 6.20.A shall not be limited in any way by any limitation on the amount or type of damages, compensation, or benefits payable by or for Contractor or any such Subcontractor,

Copyright © 2007 National Society of Professional Engineers for EJCDC. All rights reserved.

Supplier, or other individual or entity under workers' compensation acts, disability benefit acts, or other employee benefit acts.

C. The indemnification obligations of Contractor under Paragraph 6.20.A shall not extend to the liability of Engineer and Engineer's officers, directors, members, partners, employees, agents, consultants and subcontractors arising out of:

1. the preparation or approval of, or the failure to prepare or approve maps, Drawings, opinions, reports, surveys, Change Orders, designs, or Specifications; or

2. giving directions or instructions, or failing to give them, if that is the primary cause of the injury or damage.

6.21 *Delegation of Professional Design Services*

A. Contractor will not be required to provide professional design services unless such services are specifically required by the Contract Documents for a portion of the Work or unless such services are required to carry out Contractor's responsibilities for construction means, methods, techniques, sequences and procedures. Contractor shall not be required to provide professional services in violation of applicable law.

B. If professional design services or certifications by a design professional related to systems, materials or equipment are specifically required of Contractor by the Contract Documents, Owner and Engineer will specify all performance and design criteria that such services must satisfy. Contractor shall cause such services or certifications to be provided by a properly licensed professional, whose signature and seal shall appear on all drawings, calculations, specifications, certifications, Shop Drawings and other submittals prepared by such professional. Shop Drawings and other submittals related to the Work designed or certified by such professional, if prepared by others, shall bear such professional's written approval when submitted to Engineer.

C. Owner and Engineer shall be entitled to rely upon the adequacy, accuracy and completeness of the services, certifications or approvals performed by such design professionals, provided Owner and Engineer have specified to Contractor all performance and design criteria that such services must satisfy.

D. Pursuant to this Paragraph 6.21, Engineer's review and approval of design calculations and design drawings will be only for the limited purpose of checking for conformance with performance and design criteria given and the design concept expressed in the Contract Documents. Engineer's review and approval of Shop Drawings and other submittals (except design calculations and design drawings) will be only for the purpose stated in Paragraph 6.17.D.1.

E. Contractor shall not be responsible for the adequacy of the performance or design criteria required by the Contract Documents.

Copyright © 2007 National Society of Professional Engineers for EJCDC. All rights reserved.

ARTICLE 7 – OTHER WORK AT THE SITE

7.01 *Related Work at Site*

A. Owner may perform other work related to the Project at the Site with Owner's employees, or through other direct contracts therefor, or have other work performed by utility owners. If such other work is not noted in the Contract Documents, then:

1. written notice thereof will be given to Contractor prior to starting any such other work; and

2. if Owner and Contractor are unable to agree on entitlement to or on the amount or extent, if any, of any adjustment in the Contract Price or Contract Times that should be allowed as a result of such other work, a Claim may be made therefor as provided in Paragraph 10.05.

B. Contractor shall afford each other contractor who is a party to such a direct contract, each utility owner, and Owner, if Owner is performing other work with Owner's employees, proper and safe access to the Site, provide a reasonable opportunity for the introduction and storage of materials and equipment and the execution of such other work, and properly coordinate the Work with theirs. Contractor shall do all cutting, fitting, and patching of the Work that may be required to properly connect or otherwise make its several parts come together and properly integrate with such other work. Contractor shall not endanger any work of others by cutting, excavating, or otherwise altering such work; provided, however, that Contractor may cut or alter others' work with the written consent of Engineer and the others whose work will be affected. The duties and responsibilities of Contractor under this Paragraph are for the benefit of such utility owners and other contractors to the extent that there are comparable provisions for the benefit of Contractor in said direct contracts between Owner and such utility owners and other contractors.

C. If the proper execution or results of any part of Contractor's Work depends upon work performed by others under this Article 7, Contractor shall inspect such other work and promptly report to Engineer in writing any delays, defects, or deficiencies in such other work that render it unavailable or unsuitable for the proper execution and results of Contractor's Work. Contractor's failure to so report will constitute an acceptance of such other work as fit and proper for integration with Contractor's Work except for latent defects and deficiencies in such other work.

7.02 *Coordination*

A. If Owner intends to contract with others for the performance of other work on the Project at the Site, the following will be set forth in Supplementary Conditions:

1. the individual or entity who will have authority and responsibility for coordination of the activities among the various contractors will be identified;

2. the specific matters to be covered by such authority and responsibility will be itemized; and

3. the extent of such authority and responsibilities will be provided.

B. Unless otherwise provided in the Supplementary Conditions, Owner shall have sole authority and responsibility for such coordination.

Copyright © 2007 National Society of Professional Engineers for EJCDC. All rights reserved.

7.03 *Legal Relationships*

A. Paragraphs 7.01.A and 7.02 are not applicable for utilities not under the control of Owner.

B. Each other direct contract of Owner under Paragraph 7.01.A shall provide that the other contractor is liable to Owner and Contractor for the reasonable direct delay and disruption costs incurred by Contractor as a result of the other contractor's wrongful actions or inactions.

C. Contractor shall be liable to Owner and any other contractor under direct contract to Owner for the reasonable direct delay and disruption costs incurred by such other contractor as a result of Contractor's wrongful action or inactions.

ARTICLE 8 – OWNER'S RESPONSIBILITIES

8.01 *Communications to Contractor*

A. Except as otherwise provided in these General Conditions, Owner shall issue all communications to Contractor through Engineer.

8.02 *Replacement of Engineer*

A. In case of termination of the employment of Engineer, Owner shall appoint an engineer to whom Contractor makes no reasonable objection, whose status under the Contract Documents shall be that of the former Engineer.

8.03 *Furnish Data*

A. Owner shall promptly furnish the data required of Owner under the Contract Documents.

8.04 *Pay When Due*

A. Owner shall make payments to Contractor when they are due as provided in Paragraphs 14.02.C and 14.07.C.

8.05 *Lands and Easements; Reports and Tests*

A. Owner's duties with respect to providing lands and easements and providing engineering surveys to establish reference points are set forth in Paragraphs 4.01 and 4.05. Paragraph 4.02 refers to Owner's identifying and making available to Contractor copies of reports of explorations and tests of subsurface conditions and drawings of physical conditions relating to existing surface or subsurface structures at the Site.

8.06 *Insurance*

A. Owner's responsibilities, if any, with respect to purchasing and maintaining liability and property insurance are set forth in Article 5.

8.07 *Change Orders*

A. Owner is obligated to execute Change Orders as indicated in Paragraph 10.03.

Copyright © 2007 National Society of Professional Engineers for EJCDC. All rights reserved.

8.08 *Inspections, Tests, and Approvals*

A. Owner's responsibility with respect to certain inspections, tests, and approvals is set forth in Paragraph 13.03.B.

8.09 *Limitations on Owner's Responsibilities*

A. The Owner shall not supervise, direct, or have control or authority over, nor be responsible for, Contractor's means, methods, techniques, sequences, or procedures of construction, or the safety precautions and programs incident thereto, or for any failure of Contractor to comply with Laws and Regulations applicable to the performance of the Work. Owner will not be responsible for Contractor's failure to perform the Work in accordance with the Contract Documents.

8.10 *Undisclosed Hazardous Environmental Condition*

A. Owner's responsibility in respect to an undisclosed Hazardous Environmental Condition is set forth in Paragraph 4.06.

8.11 *Evidence of Financial Arrangements*

A. Upon request of Contractor, Owner shall furnish Contractor reasonable evidence that financial arrangements have been made to satisfy Owner's obligations under the Contract Documents.

8.12 *Compliance with Safety Program*

A. While at the Site, Owner's employees and representatives shall comply with the specific applicable requirements of Contractor's safety programs of which Owner has been informed pursuant to Paragraph 6.13.D.

ARTICLE 9 – ENGINEER'S STATUS DURING CONSTRUCTION

9.01 *Owner's Representative*

A. Engineer will be Owner's representative during the construction period. The duties and responsibilities and the limitations of authority of Engineer as Owner's representative during construction are set forth in the Contract Documents.

9.02 *Visits to Site*

A. Engineer will make visits to the Site at intervals appropriate to the various stages of construction as Engineer deems necessary in order to observe as an experienced and qualified design professional the progress that has been made and the quality of the various aspects of Contractor's executed Work. Based on information obtained during such visits and observations, Engineer, for the benefit of Owner, will determine, in general, if the Work is proceeding in accordance with the Contract Documents. Engineer will not be required to make exhaustive or continuous inspections on the Site to check the quality or quantity of the Work. Engineer's efforts will be directed toward providing for Owner a greater degree of confidence that the completed Work will conform generally to the Contract Documents. On the basis of such visits

Copyright © 2007 National Society of Professional Engineers for EJCDC. All rights reserved.

and observations, Engineer will keep Owner informed of the progress of the Work and will endeavor to guard Owner against defective Work.

B. Engineer's visits and observations are subject to all the limitations on Engineer's authority and responsibility set forth in Paragraph 9.09. Particularly, but without limitation, during or as a result of Engineer's visits or observations of Contractor's Work, Engineer will not supervise, direct, control, or have authority over or be responsible for Contractor's means, methods, techniques, sequences, or procedures of construction, or the safety precautions and programs incident thereto, or for any failure of Contractor to comply with Laws and Regulations applicable to the performance of the Work.

9.03 *Project Representative*

A. If Owner and Engineer agree, Engineer will furnish a Resident Project Representative to assist Engineer in providing more extensive observation of the Work. The authority and responsibilities of any such Resident Project Representative and assistants will be as provided in the Supplementary Conditions, and limitations on the responsibilities thereof will be as provided in Paragraph 9.09. If Owner designates another representative or agent to represent Owner at the Site who is not Engineer's consultant, agent or employee, the responsibilities and authority and limitations thereon of such other individual or entity will be as provided in the Supplementary Conditions.

9.04 *Authorized Variations in Work*

A. Engineer may authorize minor variations in the Work from the requirements of the Contract Documents which do not involve an adjustment in the Contract Price or the Contract Times and are compatible with the design concept of the completed Project as a functioning whole as indicated by the Contract Documents. These may be accomplished by a Field Order and will be binding on Owner and also on Contractor, who shall perform the Work involved promptly. If Owner or Contractor believes that a Field Order justifies an adjustment in the Contract Price or Contract Times, or both, and the parties are unable to agree on entitlement to or on the amount or extent, if any, of any such adjustment, a Claim may be made therefor as provided in Paragraph 10.05.

9.05 *Rejecting Defective Work*

A. Engineer will have authority to reject Work which Engineer believes to be defective, or that Engineer believes will not produce a completed Project that conforms to the Contract Documents or that will prejudice the integrity of the design concept of the completed Project as a functioning whole as indicated by the Contract Documents. Engineer will also have authority to require special inspection or testing of the Work as provided in Paragraph 13.04, whether or not the Work is fabricated, installed, or completed.

9.06 *Shop Drawings, Change Orders and Payments*

A. In connection with Engineer's authority, and limitations thereof, as to Shop Drawings and Samples, see Paragraph 6.17.

Copyright © 2007 National Society of Professional Engineers for EJCDC. All rights reserved.

B. In connection with Engineer's authority, and limitations thereof, as to design calculations and design drawings submitted in response to a delegation of professional design services, if any, see Paragraph 6.21.

C. In connection with Engineer's authority as to Change Orders, see Articles 10, 11, and 12.

D. In connection with Engineer's authority as to Applications for Payment, see Article 14.

9.07 *Determinations for Unit Price Work*

A. Engineer will determine the actual quantities and classifications of Unit Price Work performed by Contractor. Engineer will review with Contractor the Engineer's preliminary determinations on such matters before rendering a written decision thereon (by recommendation of an Application for Payment or otherwise). Engineer's written decision thereon will be final and binding (except as modified by Engineer to reflect changed factual conditions or more accurate data) upon Owner and Contractor, subject to the provisions of Paragraph 10.05.

9.08 *Decisions on Requirements of Contract Documents and Acceptability of Work*

A. Engineer will be the initial interpreter of the requirements of the Contract Documents and judge of the acceptability of the Work thereunder. All matters in question and other matters between Owner and Contractor arising prior to the date final payment is due relating to the acceptability of the Work, and the interpretation of the requirements of the Contract Documents pertaining to the performance of the Work, will be referred initially to Engineer in writing within 30 days of the event giving rise to the question.

B. Engineer will, with reasonable promptness, render a written decision on the issue referred. If Owner or Contractor believes that any such decision entitles them to an adjustment in the Contract Price or Contract Times or both, a Claim may be made under Paragraph 10.05. The date of Engineer's decision shall be the date of the event giving rise to the issues referenced for the purposes of Paragraph 10.05.B.

C. Engineer's written decision on the issue referred will be final and binding on Owner and Contractor, subject to the provisions of Paragraph 10.05.

D. When functioning as interpreter and judge under this Paragraph 9.08, Engineer will not show partiality to Owner or Contractor and will not be liable in connection with any interpretation or decision rendered in good faith in such capacity.

9.09 *Limitations on Engineer's Authority and Responsibilities*

A. Neither Engineer's authority or responsibility under this Article 9 or under any other provision of the Contract Documents nor any decision made by Engineer in good faith either to exercise or not exercise such authority or responsibility or the undertaking, exercise, or performance of any authority or responsibility by Engineer shall create, impose, or give rise to any duty in contract, tort, or otherwise owed by Engineer to Contractor, any Subcontractor, any Supplier, any other individual or entity, or to any surety for or employee or agent of any of them.

Copyright © 2007 National Society of Professional Engineers for EJCDC. All rights reserved.

B. Engineer will not supervise, direct, control, or have authority over or be responsible for Contractor's means, methods, techniques, sequences, or procedures of construction, or the safety precautions and programs incident thereto, or for any failure of Contractor to comply with Laws and Regulations applicable to the performance of the Work. Engineer will not be responsible for Contractor's failure to perform the Work in accordance with the Contract Documents.

C. Engineer will not be responsible for the acts or omissions of Contractor or of any Subcontractor, any Supplier, or of any other individual or entity performing any of the Work.

D. Engineer's review of the final Application for Payment and accompanying documentation and all maintenance and operating instructions, schedules, guarantees, bonds, certificates of inspection, tests and approvals, and other documentation required to be delivered by Paragraph 14.07.A will only be to determine generally that their content complies with the requirements of, and in the case of certificates of inspections, tests, and approvals that the results certified indicate compliance with, the Contract Documents.

E. The limitations upon authority and responsibility set forth in this Paragraph 9.09 shall also apply to the Resident Project Representative, if any, and assistants, if any.

9.10 *Compliance with Safety Program*

A. While at the Site, Engineer's employees and representatives shall comply with the specific applicable requirements of Contractor's safety programs of which Engineer has been informed pursuant to Paragraph 6.13.D.

ARTICLE 10 – CHANGES IN THE WORK; CLAIMS

10.01 *Authorized Changes in the Work*

A. Without invalidating the Contract and without notice to any surety, Owner may, at any time or from time to time, order additions, deletions, or revisions in the Work by a Change Order, or a Work Change Directive. Upon receipt of any such document, Contractor shall promptly proceed with the Work involved which will be performed under the applicable conditions of the Contract Documents (except as otherwise specifically provided).

B. If Owner and Contractor are unable to agree on entitlement to, or on the amount or extent, if any, of an adjustment in the Contract Price or Contract Times, or both, that should be allowed as a result of a Work Change Directive, a Claim may be made therefor as provided in Paragraph 10.05.

10.02 *Unauthorized Changes in the Work*

A. Contractor shall not be entitled to an increase in the Contract Price or an extension of the Contract Times with respect to any work performed that is not required by the Contract Documents as amended, modified, or supplemented as provided in Paragraph 3.04, except in the case of an emergency as provided in Paragraph 6.16 or in the case of uncovering Work as provided in Paragraph 13.04.D.

Copyright © 2007 National Society of Professional Engineers for EJCDC. All rights reserved.

10.03 *Execution of Change Orders*

A. Owner and Contractor shall execute appropriate Change Orders recommended by Engineer covering:

1. changes in the Work which are: (i) ordered by Owner pursuant to Paragraph 10.01.A, (ii) required because of acceptance of defective Work under Paragraph 13.08.A or Owner's correction of defective Work under Paragraph 13.09, or (iii) agreed to by the parties;

2. changes in the Contract Price or Contract Times which are agreed to by the parties, including any undisputed sum or amount of time for Work actually performed in accordance with a Work Change Directive; and

3. changes in the Contract Price or Contract Times which embody the substance of any written decision rendered by Engineer pursuant to Paragraph 10.05; provided that, in lieu of executing any such Change Order, an appeal may be taken from any such decision in accordance with the provisions of the Contract Documents and applicable Laws and Regulations, but during any such appeal, Contractor shall carry on the Work and adhere to the Progress Schedule as provided in Paragraph 6.18.A.

10.04 *Notification to Surety*

A. If the provisions of any bond require notice to be given to a surety of any change affecting the general scope of the Work or the provisions of the Contract Documents (including, but not limited to, Contract Price or Contract Times), the giving of any such notice will be Contractor's responsibility. The amount of each applicable bond will be adjusted to reflect the effect of any such change.

10.05 *Claims*

A. *Engineer's Decision Required*: All Claims, except those waived pursuant to Paragraph 14.09, shall be referred to the Engineer for decision. A decision by Engineer shall be required as a condition precedent to any exercise by Owner or Contractor of any rights or remedies either may otherwise have under the Contract Documents or by Laws and Regulations in respect of such Claims.

B. *Notice:* Written notice stating the general nature of each Claim shall be delivered by the claimant to Engineer and the other party to the Contract promptly (but in no event later than 30 days) after the start of the event giving rise thereto. The responsibility to substantiate a Claim shall rest with the party making the Claim. Notice of the amount or extent of the Claim, with supporting data shall be delivered to the Engineer and the other party to the Contract within 60 days after the start of such event (unless Engineer allows additional time for claimant to submit additional or more accurate data in support of such Claim). A Claim for an adjustment in Contract Price shall be prepared in accordance with the provisions of Paragraph 12.01.B. A Claim for an adjustment in Contract Times shall be prepared in accordance with the provisions of Paragraph 12.02.B. Each Claim shall be accompanied by claimant's written statement that the adjustment claimed is the entire adjustment to which the claimant believes it is entitled as a result of said event. The

Copyright © 2007 National Society of Professional Engineers for EJCDC. All rights reserved.

opposing party shall submit any response to Engineer and the claimant within 30 days after receipt of the claimant's last submittal (unless Engineer allows additional time).

C. *Engineer's Action*: Engineer will review each Claim and, within 30 days after receipt of the last submittal of the claimant or the last submittal of the opposing party, if any, take one of the following actions in writing:

1. deny the Claim in whole or in part;

2. approve the Claim; or

3. notify the parties that the Engineer is unable to resolve the Claim if, in the Engineer's sole discretion, it would be inappropriate for the Engineer to do so. For purposes of further resolution of the Claim, such notice shall be deemed a denial.

D. In the event that Engineer does not take action on a Claim within said 30 days, the Claim shall be deemed denied.

E. Engineer's written action under Paragraph 10.05.C or denial pursuant to Paragraphs 10.05.C.3 or 10.05.D will be final and binding upon Owner and Contractor, unless Owner or Contractor invoke the dispute resolution procedure set forth in Article 16 within 30 days of such action or denial.

F. No Claim for an adjustment in Contract Price or Contract Times will be valid if not submitted in accordance with this Paragraph 10.05.

ARTICLE 11 – COST OF THE WORK; ALLOWANCES; UNIT PRICE WORK

11.01 *Cost of the Work*

A. *Costs Included:* The term Cost of the Work means the sum of all costs, except those excluded in Paragraph 11.01.B, necessarily incurred and paid by Contractor in the proper performance of the Work. When the value of any Work covered by a Change Order or when a Claim for an adjustment in Contract Price is determined on the basis of Cost of the Work, the costs to be reimbursed to Contractor will be only those additional or incremental costs required because of the change in the Work or because of the event giving rise to the Claim. Except as otherwise may be agreed to in writing by Owner, such costs shall be in amounts no higher than those prevailing in the locality of the Project, shall not include any of the costs itemized in Paragraph 11.01.B, and shall include only the following items:

1. Payroll costs for employees in the direct employ of Contractor in the performance of the Work under schedules of job classifications agreed upon by Owner and Contractor. Such employees shall include, without limitation, superintendents, foremen, and other personnel employed full time on the Work. Payroll costs for employees not employed full time on the Work shall be apportioned on the basis of their time spent on the Work. Payroll costs shall include, but not be limited to, salaries and wages plus the cost of fringe benefits, which shall include social security contributions, unemployment, excise, and payroll taxes, workers' compensation, health and retirement benefits, bonuses, sick leave, vacation and holiday pay applicable thereto. The expenses of performing Work outside of regular working hours, on

Copyright © 2007 National Society of Professional Engineers for EJCDC. All rights reserved.

Saturday, Sunday, or legal holidays, shall be included in the above to the extent authorized by Owner.

2. Cost of all materials and equipment furnished and incorporated in the Work, including costs of transportation and storage thereof, and Suppliers' field services required in connection therewith. All cash discounts shall accrue to Contractor unless Owner deposits funds with Contractor with which to make payments, in which case the cash discounts shall accrue to Owner. All trade discounts, rebates and refunds and returns from sale of surplus materials and equipment shall accrue to Owner, and Contractor shall make provisions so that they may be obtained.

3. Payments made by Contractor to Subcontractors for Work performed by Subcontractors. If required by Owner, Contractor shall obtain competitive bids from subcontractors acceptable to Owner and Contractor and shall deliver such bids to Owner, who will then determine, with the advice of Engineer, which bids, if any, will be acceptable. If any subcontract provides that the Subcontractor is to be paid on the basis of Cost of the Work plus a fee, the Subcontractor's Cost of the Work and fee shall be determined in the same manner as Contractor's Cost of the Work and fee as provided in this Paragraph 11.01.

4. Costs of special consultants (including but not limited to engineers, architects, testing laboratories, surveyors, attorneys, and accountants) employed for services specifically related to the Work.

5. Supplemental costs including the following:

   a. The proportion of necessary transportation, travel, and subsistence expenses of Contractor's employees incurred in discharge of duties connected with the Work.

   b. Cost, including transportation and maintenance, of all materials, supplies, equipment, machinery, appliances, office, and temporary facilities at the Site, and hand tools not owned by the workers, which are consumed in the performance of the Work, and cost, less market value, of such items used but not consumed which remain the property of Contractor.

   c. Rentals of all construction equipment and machinery, and the parts thereof whether rented from Contractor or others in accordance with rental agreements approved by Owner with the advice of Engineer, and the costs of transportation, loading, unloading, assembly, dismantling, and removal thereof. All such costs shall be in accordance with the terms of said rental agreements. The rental of any such equipment, machinery, or parts shall cease when the use thereof is no longer necessary for the Work.

   d. Sales, consumer, use, and other similar taxes related to the Work, and for which Contractor is liable, as imposed by Laws and Regulations.

   e. Deposits lost for causes other than negligence of Contractor, any Subcontractor, or anyone directly or indirectly employed by any of them or for whose acts any of them may be liable, and royalty payments and fees for permits and licenses.

Copyright © 2007 National Society of Professional Engineers for EJCDC. All rights reserved.

f. Losses and damages (and related expenses) caused by damage to the Work, not compensated by insurance or otherwise, sustained by Contractor in connection with the performance of the Work (except losses and damages within the deductible amounts of property insurance established in accordance with Paragraph 5.06.D), provided such losses and damages have resulted from causes other than the negligence of Contractor, any Subcontractor, or anyone directly or indirectly employed by any of them or for whose acts any of them may be liable. Such losses shall include settlements made with the written consent and approval of Owner. No such losses, damages, and expenses shall be included in the Cost of the Work for the purpose of determining Contractor's fee.

g. The cost of utilities, fuel, and sanitary facilities at the Site.

h. Minor expenses such as telegrams, long distance telephone calls, telephone service at the Site, express and courier services, and similar petty cash items in connection with the Work.

i. The costs of premiums for all bonds and insurance Contractor is required by the Contract Documents to purchase and maintain.

B. *Costs Excluded:* The term Cost of the Work shall not include any of the following items:

1. Payroll costs and other compensation of Contractor's officers, executives, principals (of partnerships and sole proprietorships), general managers, safety managers, engineers, architects, estimators, attorneys, auditors, accountants, purchasing and contracting agents, expediters, timekeepers, clerks, and other personnel employed by Contractor, whether at the Site or in Contractor's principal or branch office for general administration of the Work and not specifically included in the agreed upon schedule of job classifications referred to in Paragraph 11.01.A.1 or specifically covered by Paragraph 11.01.A.4, all of which are to be considered administrative costs covered by the Contractor's fee.

2. Expenses of Contractor's principal and branch offices other than Contractor's office at the Site.

3. Any part of Contractor's capital expenses, including interest on Contractor's capital employed for the Work and charges against Contractor for delinquent payments.

4. Costs due to the negligence of Contractor, any Subcontractor, or anyone directly or indirectly employed by any of them or for whose acts any of them may be liable, including but not limited to, the correction of defective Work, disposal of materials or equipment wrongly supplied, and making good any damage to property.

5. Other overhead or general expense costs of any kind and the costs of any item not specifically and expressly included in Paragraphs 11.01.A.

C. *Contractor's Fee:* When all the Work is performed on the basis of cost-plus, Contractor's fee shall be determined as set forth in the Agreement. When the value of any Work covered by a Change Order or when a Claim for an adjustment in Contract Price is determined on the basis of Cost of the Work, Contractor's fee shall be determined as set forth in Paragraph 12.01.C.

Copyright © 2007 National Society of Professional Engineers for EJCDC. All rights reserved.

D. *Documentation:* Whenever the Cost of the Work for any purpose is to be determined pursuant to Paragraphs 11.01.A and 11.01.B, Contractor will establish and maintain records thereof in accordance with generally accepted accounting practices and submit in a form acceptable to Engineer an itemized cost breakdown together with supporting data.

11.02 *Allowances*

A. It is understood that Contractor has included in the Contract Price all allowances so named in the Contract Documents and shall cause the Work so covered to be performed for such sums and by such persons or entities as may be acceptable to Owner and Engineer.

B. *Cash Allowances:*

1. Contractor agrees that:

a. the cash allowances include the cost to Contractor (less any applicable trade discounts) of materials and equipment required by the allowances to be delivered at the Site, and all applicable taxes; and

b. Contractor's costs for unloading and handling on the Site, labor, installation, overhead, profit, and other expenses contemplated for the cash allowances have been included in the Contract Price and not in the allowances, and no demand for additional payment on account of any of the foregoing will be valid.

C. *Contingency Allowance:*

1. Contractor agrees that a contingency allowance, if any, is for the sole use of Owner to cover unanticipated costs.

D. Prior to final payment, an appropriate Change Order will be issued as recommended by Engineer to reflect actual amounts due Contractor on account of Work covered by allowances, and the Contract Price shall be correspondingly adjusted.

11.03 *Unit Price Work*

A. Where the Contract Documents provide that all or part of the Work is to be Unit Price Work, initially the Contract Price will be deemed to include for all Unit Price Work an amount equal to the sum of the unit price for each separately identified item of Unit Price Work times the estimated quantity of each item as indicated in the Agreement.

B. The estimated quantities of items of Unit Price Work are not guaranteed and are solely for the purpose of comparison of Bids and determining an initial Contract Price. Determinations of the actual quantities and classifications of Unit Price Work performed by Contractor will be made by Engineer subject to the provisions of Paragraph 9.07.

C. Each unit price will be deemed to include an amount considered by Contractor to be adequate to cover Contractor's overhead and profit for each separately identified item.

Copyright © 2007 National Society of Professional Engineers for EJCDC. All rights reserved.

D. Owner or Contractor may make a Claim for an adjustment in the Contract Price in accordance with Paragraph 10.05 if:

1. the quantity of any item of Unit Price Work performed by Contractor differs materially and significantly from the estimated quantity of such item indicated in the Agreement; and

2. there is no corresponding adjustment with respect to any other item of Work; and

3. Contractor believes that Contractor is entitled to an increase in Contract Price as a result of having incurred additional expense or Owner believes that Owner is entitled to a decrease in Contract Price and the parties are unable to agree as to the amount of any such increase or decrease.

ARTICLE 12 – CHANGE OF CONTRACT PRICE; CHANGE OF CONTRACT TIMES

12.01 *Change of Contract Price*

A. The Contract Price may only be changed by a Change Order. Any Claim for an adjustment in the Contract Price shall be based on written notice submitted by the party making the Claim to the Engineer and the other party to the Contract in accordance with the provisions of Paragraph 10.05.

B. The value of any Work covered by a Change Order or of any Claim for an adjustment in the Contract Price will be determined as follows:

1. where the Work involved is covered by unit prices contained in the Contract Documents, by application of such unit prices to the quantities of the items involved (subject to the provisions of Paragraph 11.03); or

2. where the Work involved is not covered by unit prices contained in the Contract Documents, by a mutually agreed lump sum (which may include an allowance for overhead and profit not necessarily in accordance with Paragraph 12.01.C.2); or

3. where the Work involved is not covered by unit prices contained in the Contract Documents and agreement to a lump sum is not reached under Paragraph 12.01.B.2, on the basis of the Cost of the Work (determined as provided in Paragraph 11.01) plus a Contractor's fee for overhead and profit (determined as provided in Paragraph 12.01.C).

C. *Contractor's Fee:* The Contractor's fee for overhead and profit shall be determined as follows:

1. a mutually acceptable fixed fee; or

2. if a fixed fee is not agreed upon, then a fee based on the following percentages of the various portions of the Cost of the Work:

a. for costs incurred under Paragraphs 11.01.A.1 and 11.01.A.2, the Contractor's fee shall be 15 percent;

b. for costs incurred under Paragraph 11.01.A.3, the Contractor's fee shall be five percent;

Copyright © 2007 National Society of Professional Engineers for EJCDC. All rights reserved.

c. where one or more tiers of subcontracts are on the basis of Cost of the Work plus a fee and no fixed fee is agreed upon, the intent of Paragraphs 12.01.C.2.a and 12.01.C.2.b is that the Subcontractor who actually performs the Work, at whatever tier, will be paid a fee of 15 percent of the costs incurred by such Subcontractor under Paragraphs 11.01.A.1 and 11.01.A.2 and that any higher tier Subcontractor and Contractor will each be paid a fee of five percent of the amount paid to the next lower tier Subcontractor;

d. no fee shall be payable on the basis of costs itemized under Paragraphs 11.01.A.4, 11.01.A.5, and 11.01.B;

e. the amount of credit to be allowed by Contractor to Owner for any change which results in a net decrease in cost will be the amount of the actual net decrease in cost plus a deduction in Contractor's fee by an amount equal to five percent of such net decrease; and

f. when both additions and credits are involved in any one change, the adjustment in Contractor's fee shall be computed on the basis of the net change in accordance with Paragraphs 12.01.C.2.a through 12.01.C.2.e, inclusive.

12.02 *Change of Contract Times*

A. The Contract Times may only be changed by a Change Order. Any Claim for an adjustment in the Contract Times shall be based on written notice submitted by the party making the Claim to the Engineer and the other party to the Contract in accordance with the provisions of Paragraph 10.05.

B. Any adjustment of the Contract Times covered by a Change Order or any Claim for an adjustment in the Contract Times will be determined in accordance with the provisions of this Article 12.

12.03 *Delays*

A. Where Contractor is prevented from completing any part of the Work within the Contract Times due to delay beyond the control of Contractor, the Contract Times will be extended in an amount equal to the time lost due to such delay if a Claim is made therefor as provided in Paragraph 12.02.A. Delays beyond the control of Contractor shall include, but not be limited to, acts or neglect by Owner, acts or neglect of utility owners or other contractors performing other work as contemplated by Article 7, fires, floods, epidemics, abnormal weather conditions, or acts of God.

B. If Owner, Engineer, or other contractors or utility owners performing other work for Owner as contemplated by Article 7, or anyone for whom Owner is responsible, delays, disrupts, or interferes with the performance or progress of the Work, then Contractor shall be entitled to an equitable adjustment in the Contract Price or the Contract Times, or both. Contractor's entitlement to an adjustment of the Contract Times is conditioned on such adjustment being essential to Contractor's ability to complete the Work within the Contract Times.

C. If Contractor is delayed in the performance or progress of the Work by fire, flood, epidemic, abnormal weather conditions, acts of God, acts or failures to act of utility owners not under the

Copyright © 2007 National Society of Professional Engineers for EJCDC. All rights reserved.

control of Owner, or other causes not the fault of and beyond control of Owner and Contractor, then Contractor shall be entitled to an equitable adjustment in Contract Times, if such adjustment is essential to Contractor's ability to complete the Work within the Contract Times. Such an adjustment shall be Contractor's sole and exclusive remedy for the delays described in this Paragraph 12.03.C.

D. Owner, Engineer, and their officers, directors, members, partners, employees, agents, consultants, or subcontractors shall not be liable to Contractor for any claims, costs, losses, or damages (including but not limited to all fees and charges of engineers, architects, attorneys, and other professionals and all court or arbitration or other dispute resolution costs) sustained by Contractor on or in connection with any other project or anticipated project.

E. Contractor shall not be entitled to an adjustment in Contract Price or Contract Times for delays within the control of Contractor. Delays attributable to and within the control of a Subcontractor or Supplier shall be deemed to be delays within the control of Contractor.

ARTICLE 13 – TESTS AND INSPECTIONS; CORRECTION, REMOVAL OR ACCEPTANCE OF DEFECTIVE WORK

13.01 *Notice of Defects*

A. Prompt notice of all defective Work of which Owner or Engineer has actual knowledge will be given to Contractor. Defective Work may be rejected, corrected, or accepted as provided in this Article 13.

13.02 *Access to Work*

A. Owner, Engineer, their consultants and other representatives and personnel of Owner, independent testing laboratories, and governmental agencies with jurisdictional interests will have access to the Site and the Work at reasonable times for their observation, inspection, and testing. Contractor shall provide them proper and safe conditions for such access and advise them of Contractor's safety procedures and programs so that they may comply therewith as applicable.

13.03 *Tests and Inspections*

A. Contractor shall give Engineer timely notice of readiness of the Work for all required inspections, tests, or approvals and shall cooperate with inspection and testing personnel to facilitate required inspections or tests.

B. Owner shall employ and pay for the services of an independent testing laboratory to perform all inspections, tests, or approvals required by the Contract Documents except:

1. for inspections, tests, or approvals covered by Paragraphs 13.03.C and 13.03.D below;

2. that costs incurred in connection with tests or inspections conducted pursuant to Paragraph 13.04.B shall be paid as provided in Paragraph 13.04.C; and

3. as otherwise specifically provided in the Contract Documents.

Copyright © 2007 National Society of Professional Engineers for EJCDC. All rights reserved.

C. If Laws or Regulations of any public body having jurisdiction require any Work (or part thereof) specifically to be inspected, tested, or approved by an employee or other representative of such public body, Contractor shall assume full responsibility for arranging and obtaining such inspections, tests, or approvals, pay all costs in connection therewith, and furnish Engineer the required certificates of inspection or approval.

D. Contractor shall be responsible for arranging and obtaining and shall pay all costs in connection with any inspections, tests, or approvals required for Owner's and Engineer's acceptance of materials or equipment to be incorporated in the Work; or acceptance of materials, mix designs, or equipment submitted for approval prior to Contractor's purchase thereof for incorporation in the Work. Such inspections, tests, or approvals shall be performed by organizations acceptable to Owner and Engineer.

E. If any Work (or the work of others) that is to be inspected, tested, or approved is covered by Contractor without written concurrence of Engineer, Contractor shall, if requested by Engineer, uncover such Work for observation.

F. Uncovering Work as provided in Paragraph 13.03.E shall be at Contractor's expense unless Contractor has given Engineer timely notice of Contractor's intention to cover the same and Engineer has not acted with reasonable promptness in response to such notice.

13.04 *Uncovering Work*

A. If any Work is covered contrary to the written request of Engineer, it must, if requested by Engineer, be uncovered for Engineer's observation and replaced at Contractor's expense.

B. If Engineer considers it necessary or advisable that covered Work be observed by Engineer or inspected or tested by others, Contractor, at Engineer's request, shall uncover, expose, or otherwise make available for observation, inspection, or testing as Engineer may require, that portion of the Work in question, furnishing all necessary labor, material, and equipment.

C. If it is found that the uncovered Work is defective, Contractor shall pay all claims, costs, losses, and damages (including but not limited to all fees and charges of engineers, architects, attorneys, and other professionals and all court or arbitration or other dispute resolution costs) arising out of or relating to such uncovering, exposure, observation, inspection, and testing, and of satisfactory replacement or reconstruction (including but not limited to all costs of repair or replacement of work of others); and Owner shall be entitled to an appropriate decrease in the Contract Price. If the parties are unable to agree as to the amount thereof, Owner may make a Claim therefor as provided in Paragraph 10.05.

D. If the uncovered Work is not found to be defective, Contractor shall be allowed an increase in the Contract Price or an extension of the Contract Times, or both, directly attributable to such uncovering, exposure, observation, inspection, testing, replacement, and reconstruction. If the parties are unable to agree as to the amount or extent thereof, Contractor may make a Claim therefor as provided in Paragraph 10.05.

Copyright © 2007 National Society of Professional Engineers for EJCDC. All rights reserved.

13.05 *Owner May Stop the Work*

A. If the Work is defective, or Contractor fails to supply sufficient skilled workers or suitable materials or equipment, or fails to perform the Work in such a way that the completed Work will conform to the Contract Documents, Owner may order Contractor to stop the Work, or any portion thereof, until the cause for such order has been eliminated; however, this right of Owner to stop the Work shall not give rise to any duty on the part of Owner to exercise this right for the benefit of Contractor, any Subcontractor, any Supplier, any other individual or entity, or any surety for, or employee or agent of any of them.

13.06 *Correction or Removal of Defective Work*

A. Promptly after receipt of written notice, Contractor shall correct all defective Work, whether or not fabricated, installed, or completed, or, if the Work has been rejected by Engineer, remove it from the Project and replace it with Work that is not defective. Contractor shall pay all claims, costs, losses, and damages (including but not limited to all fees and charges of engineers, architects, attorneys, and other professionals and all court or arbitration or other dispute resolution costs) arising out of or relating to such correction or removal (including but not limited to all costs of repair or replacement of work of others).

B. When correcting defective Work under the terms of this Paragraph 13.06 or Paragraph 13.07, Contractor shall take no action that would void or otherwise impair Owner's special warranty and guarantee, if any, on said Work.

13.07 *Correction Period*

A. If within one year after the date of Substantial Completion (or such longer period of time as may be prescribed by the terms of any applicable special guarantee required by the Contract Documents) or by any specific provision of the Contract Documents, any Work is found to be defective, or if the repair of any damages to the land or areas made available for Contractor's use by Owner or permitted by Laws and Regulations as contemplated in Paragraph 6.11.A is found to be defective, Contractor shall promptly, without cost to Owner and in accordance with Owner's written instructions:

1. repair such defective land or areas; or

2. correct such defective Work; or

3. if the defective Work has been rejected by Owner, remove it from the Project and replace it with Work that is not defective, and

4. satisfactorily correct or repair or remove and replace any damage to other Work, to the work of others or other land or areas resulting therefrom.

B. If Contractor does not promptly comply with the terms of Owner's written instructions, or in an emergency where delay would cause serious risk of loss or damage, Owner may have the defective Work corrected or repaired or may have the rejected Work removed and replaced. All claims, costs, losses, and damages (including but not limited to all fees and charges of engineers, architects, attorneys, and other professionals and all court or arbitration or other dispute

Copyright © 2007 National Society of Professional Engineers for EJCDC. All rights reserved.

resolution costs) arising out of or relating to such correction or repair or such removal and replacement (including but not limited to all costs of repair or replacement of work of others) will be paid by Contractor.

C. In special circumstances where a particular item of equipment is placed in continuous service before Substantial Completion of all the Work, the correction period for that item may start to run from an earlier date if so provided in the Specifications.

D. Where defective Work (and damage to other Work resulting therefrom) has been corrected or removed and replaced under this Paragraph 13.07, the correction period hereunder with respect to such Work will be extended for an additional period of one year after such correction or removal and replacement has been satisfactorily completed.

E. Contractor's obligations under this Paragraph 13.07 are in addition to any other obligation or warranty. The provisions of this Paragraph 13.07 shall not be construed as a substitute for, or a waiver of, the provisions of any applicable statute of limitation or repose.

13.08 *Acceptance of Defective Work*

A. If, instead of requiring correction or removal and replacement of defective Work, Owner (and, prior to Engineer's recommendation of final payment, Engineer) prefers to accept it, Owner may do so. Contractor shall pay all claims, costs, losses, and damages (including but not limited to all fees and charges of engineers, architects, attorneys, and other professionals and all court or arbitration or other dispute resolution costs) attributable to Owner's evaluation of and determination to accept such defective Work (such costs to be approved by Engineer as to reasonableness) and for the diminished value of the Work to the extent not otherwise paid by Contractor pursuant to this sentence. If any such acceptance occurs prior to Engineer's recommendation of final payment, a Change Order will be issued incorporating the necessary revisions in the Contract Documents with respect to the Work, and Owner shall be entitled to an appropriate decrease in the Contract Price, reflecting the diminished value of Work so accepted. If the parties are unable to agree as to the amount thereof, Owner may make a Claim therefor as provided in Paragraph 10.05. If the acceptance occurs after such recommendation, an appropriate amount will be paid by Contractor to Owner.

13.09 *Owner May Correct Defective Work*

A. If Contractor fails within a reasonable time after written notice from Engineer to correct defective Work, or to remove and replace rejected Work as required by Engineer in accordance with Paragraph 13.06.A, or if Contractor fails to perform the Work in accordance with the Contract Documents, or if Contractor fails to comply with any other provision of the Contract Documents, Owner may, after seven days written notice to Contractor, correct, or remedy any such deficiency.

B. In exercising the rights and remedies under this Paragraph 13.09, Owner shall proceed expeditiously. In connection with such corrective or remedial action, Owner may exclude Contractor from all or part of the Site, take possession of all or part of the Work and suspend Contractor's services related thereto, take possession of Contractor's tools, appliances, construction equipment and machinery at the Site, and incorporate in the Work all materials and

Copyright © 2007 National Society of Professional Engineers for EJCDC. All rights reserved.

equipment stored at the Site or for which Owner has paid Contractor but which are stored elsewhere. Contractor shall allow Owner, Owner's representatives, agents and employees, Owner's other contractors, and Engineer and Engineer's consultants access to the Site to enable Owner to exercise the rights and remedies under this Paragraph.

C. All claims, costs, losses, and damages (including but not limited to all fees and charges of engineers, architects, attorneys, and other professionals and all court or arbitration or other dispute resolution costs) incurred or sustained by Owner in exercising the rights and remedies under this Paragraph 13.09 will be charged against Contractor, and a Change Order will be issued incorporating the necessary revisions in the Contract Documents with respect to the Work; and Owner shall be entitled to an appropriate decrease in the Contract Price. If the parties are unable to agree as to the amount of the adjustment, Owner may make a Claim therefor as provided in Paragraph 10.05. Such claims, costs, losses and damages will include but not be limited to all costs of repair, or replacement of work of others destroyed or damaged by correction, removal, or replacement of Contractor's defective Work.

D. Contractor shall not be allowed an extension of the Contract Times because of any delay in the performance of the Work attributable to the exercise by Owner of Owner's rights and remedies under this Paragraph 13.09.

ARTICLE 14 – PAYMENTS TO CONTRACTOR AND COMPLETION

14.01 *Schedule of Values*

A. The Schedule of Values established as provided in Paragraph 2.07.A will serve as the basis for progress payments and will be incorporated into a form of Application for Payment acceptable to Engineer. Progress payments on account of Unit Price Work will be based on the number of units completed.

14.02 *Progress Payments*

A. *Applications for Payments:*

1. At least 20 days before the date established in the Agreement for each progress payment (but not more often than once a month), Contractor shall submit to Engineer for review an Application for Payment filled out and signed by Contractor covering the Work completed as of the date of the Application and accompanied by such supporting documentation as is required by the Contract Documents. If payment is requested on the basis of materials and equipment not incorporated in the Work but delivered and suitably stored at the Site or at another location agreed to in writing, the Application for Payment shall also be accompanied by a bill of sale, invoice, or other documentation warranting that Owner has received the materials and equipment free and clear of all Liens and evidence that the materials and equipment are covered by appropriate property insurance or other arrangements to protect Owner's interest therein, all of which must be satisfactory to Owner.

2. Beginning with the second Application for Payment, each Application shall include an affidavit of Contractor stating that all previous progress payments received on account of the

Copyright © 2007 National Society of Professional Engineers for EJCDC. All rights reserved.

Work have been applied on account to discharge Contractor's legitimate obligations associated with prior Applications for Payment.

3. The amount of retainage with respect to progress payments will be as stipulated in the Agreement.

B. *Review of Applications:*

1. Engineer will, within 10 days after receipt of each Application for Payment, either indicate in writing a recommendation of payment and present the Application to Owner or return the Application to Contractor indicating in writing Engineer's reasons for refusing to recommend payment. In the latter case, Contractor may make the necessary corrections and resubmit the Application.

2. Engineer's recommendation of any payment requested in an Application for Payment will constitute a representation by Engineer to Owner, based on Engineer's observations of the executed Work as an experienced and qualified design professional, and on Engineer's review of the Application for Payment and the accompanying data and schedules, that to the best of Engineer's knowledge, information and belief:

   a. the Work has progressed to the point indicated;

   b. the quality of the Work is generally in accordance with the Contract Documents (subject to an evaluation of the Work as a functioning whole prior to or upon Substantial Completion, the results of any subsequent tests called for in the Contract Documents, a final determination of quantities and classifications for Unit Price Work under Paragraph 9.07, and any other qualifications stated in the recommendation); and

   c. the conditions precedent to Contractor's being entitled to such payment appear to have been fulfilled in so far as it is Engineer's responsibility to observe the Work.

3. By recommending any such payment Engineer will not thereby be deemed to have represented that:

   a. inspections made to check the quality or the quantity of the Work as it has been performed have been exhaustive, extended to every aspect of the Work in progress, or involved detailed inspections of the Work beyond the responsibilities specifically assigned to Engineer in the Contract Documents; or

   b. there may not be other matters or issues between the parties that might entitle Contractor to be paid additionally by Owner or entitle Owner to withhold payment to Contractor.

4. Neither Engineer's review of Contractor's Work for the purposes of recommending payments nor Engineer's recommendation of any payment, including final payment, will impose responsibility on Engineer:

   a. to supervise, direct, or control the Work, or

Copyright © 2007 National Society of Professional Engineers for EJCDC. All rights reserved.

b. for the means, methods, techniques, sequences, or procedures of construction, or the safety precautions and programs incident thereto, or

c. for Contractor's failure to comply with Laws and Regulations applicable to Contractor's performance of the Work, or

d. to make any examination to ascertain how or for what purposes Contractor has used the moneys paid on account of the Contract Price, or

e. to determine that title to any of the Work, materials, or equipment has passed to Owner free and clear of any Liens.

5. Engineer may refuse to recommend the whole or any part of any payment if, in Engineer's opinion, it would be incorrect to make the representations to Owner stated in Paragraph 14.02.B.2. Engineer may also refuse to recommend any such payment or, because of subsequently discovered evidence or the results of subsequent inspections or tests, revise or revoke any such payment recommendation previously made, to such extent as may be necessary in Engineer's opinion to protect Owner from loss because:

a. the Work is defective, or completed Work has been damaged, requiring correction or replacement;

b. the Contract Price has been reduced by Change Orders;

c. Owner has been required to correct defective Work or complete Work in accordance with Paragraph 13.09; or

d. Engineer has actual knowledge of the occurrence of any of the events enumerated in Paragraph 15.02.A.

C. *Payment Becomes Due:*

1. Ten days after presentation of the Application for Payment to Owner with Engineer's recommendation, the amount recommended will (subject to the provisions of Paragraph 14.02.D) become due, and when due will be paid by Owner to Contractor.

D. *Reduction in Payment:*

1. Owner may refuse to make payment of the full amount recommended by Engineer because:

a. claims have been made against Owner on account of Contractor's performance or furnishing of the Work;

b. Liens have been filed in connection with the Work, except where Contractor has delivered a specific bond satisfactory to Owner to secure the satisfaction and discharge of such Liens;

c. there are other items entitling Owner to a set-off against the amount recommended; or

Copyright © 2007 National Society of Professional Engineers for EJCDC. All rights reserved.

d. Owner has actual knowledge of the occurrence of any of the events enumerated in Paragraphs 14.02.B.5.a through 14.02.B.5.c or Paragraph 15.02.A.

2. If Owner refuses to make payment of the full amount recommended by Engineer, Owner will give Contractor immediate written notice (with a copy to Engineer) stating the reasons for such action and promptly pay Contractor any amount remaining after deduction of the amount so withheld. Owner shall promptly pay Contractor the amount so withheld, or any adjustment thereto agreed to by Owner and Contractor, when Contractor remedies the reasons for such action.

3. Upon a subsequent determination that Owner's refusal of payment was not justified, the amount wrongfully withheld shall be treated as an amount due as determined by Paragraph 14.02.C.1 and subject to interest as provided in the Agreement.

14.03 *Contractor's Warranty of Title*

A. Contractor warrants and guarantees that title to all Work, materials, and equipment covered by any Application for Payment, whether incorporated in the Project or not, will pass to Owner no later than the time of payment free and clear of all Liens.

14.04 *Substantial Completion*

A. When Contractor considers the entire Work ready for its intended use Contractor shall notify Owner and Engineer in writing that the entire Work is substantially complete (except for items specifically listed by Contractor as incomplete) and request that Engineer issue a certificate of Substantial Completion.

B. Promptly after Contractor's notification, Owner, Contractor, and Engineer shall make an inspection of the Work to determine the status of completion. If Engineer does not consider the Work substantially complete, Engineer will notify Contractor in writing giving the reasons therefor.

C. If Engineer considers the Work substantially complete, Engineer will deliver to Owner a tentative certificate of Substantial Completion which shall fix the date of Substantial Completion. There shall be attached to the certificate a tentative list of items to be completed or corrected before final payment. Owner shall have seven days after receipt of the tentative certificate during which to make written objection to Engineer as to any provisions of the certificate or attached list. If, after considering such objections, Engineer concludes that the Work is not substantially complete, Engineer will, within 14 days after submission of the tentative certificate to Owner, notify Contractor in writing, stating the reasons therefor. If, after consideration of Owner's objections, Engineer considers the Work substantially complete, Engineer will, within said 14 days, execute and deliver to Owner and Contractor a definitive certificate of Substantial Completion (with a revised tentative list of items to be completed or corrected) reflecting such changes from the tentative certificate as Engineer believes justified after consideration of any objections from Owner.

D. At the time of delivery of the tentative certificate of Substantial Completion, Engineer will deliver to Owner and Contractor a written recommendation as to division of responsibilities

Copyright © 2007 National Society of Professional Engineers for EJCDC. All rights reserved.

pending final payment between Owner and Contractor with respect to security, operation, safety, and protection of the Work, maintenance, heat, utilities, insurance, and warranties and guarantees. Unless Owner and Contractor agree otherwise in writing and so inform Engineer in writing prior to Engineer's issuing the definitive certificate of Substantial Completion, Engineer's aforesaid recommendation will be binding on Owner and Contractor until final payment.

E. Owner shall have the right to exclude Contractor from the Site after the date of Substantial Completion subject to allowing Contractor reasonable access to remove its property and complete or correct items on the tentative list.

14.05 *Partial Utilization*

A. Prior to Substantial Completion of all the Work, Owner may use or occupy any substantially completed part of the Work which has specifically been identified in the Contract Documents, or which Owner, Engineer, and Contractor agree constitutes a separately functioning and usable part of the Work that can be used by Owner for its intended purpose without significant interference with Contractor's performance of the remainder of the Work, subject to the following conditions:

1. Owner at any time may request Contractor in writing to permit Owner to use or occupy any such part of the Work which Owner believes to be ready for its intended use and substantially complete. If and when Contractor agrees that such part of the Work is substantially complete, Contractor, Owner, and Engineer will follow the procedures of Paragraph 14.04.A through D for that part of the Work.

2. Contractor at any time may notify Owner and Engineer in writing that Contractor considers any such part of the Work ready for its intended use and substantially complete and request Engineer to issue a certificate of Substantial Completion for that part of the Work.

3. Within a reasonable time after either such request, Owner, Contractor, and Engineer shall make an inspection of that part of the Work to determine its status of completion. If Engineer does not consider that part of the Work to be substantially complete, Engineer will notify Owner and Contractor in writing giving the reasons therefor. If Engineer considers that part of the Work to be substantially complete, the provisions of Paragraph 14.04 will apply with respect to certification of Substantial Completion of that part of the Work and the division of responsibility in respect thereof and access thereto.

4. No use or occupancy or separate operation of part of the Work may occur prior to compliance with the requirements of Paragraph 5.10 regarding property insurance.

14.06 *Final Inspection*

A. Upon written notice from Contractor that the entire Work or an agreed portion thereof is complete, Engineer will promptly make a final inspection with Owner and Contractor and will notify Contractor in writing of all particulars in which this inspection reveals that the Work is incomplete or defective. Contractor shall immediately take such measures as are necessary to complete such Work or remedy such deficiencies.

Copyright © 2007 National Society of Professional Engineers for EJCDC. All rights reserved.

14.07 *Final Payment*

A. *Application for Payment:*

1. After Contractor has, in the opinion of Engineer, satisfactorily completed all corrections identified during the final inspection and has delivered, in accordance with the Contract Documents, all maintenance and operating instructions, schedules, guarantees, bonds, certificates or other evidence of insurance, certificates of inspection, marked-up record documents (as provided in Paragraph 6.12), and other documents, Contractor may make application for final payment following the procedure for progress payments.

2. The final Application for Payment shall be accompanied (except as previously delivered) by:

   a. all documentation called for in the Contract Documents, including but not limited to the evidence of insurance required by Paragraph 5.04.B.6;

   b. consent of the surety, if any, to final payment;

   c. a list of all Claims against Owner that Contractor believes are unsettled; and

   d. complete and legally effective releases or waivers (satisfactory to Owner) of all Lien rights arising out of or Liens filed in connection with the Work.

3. In lieu of the releases or waivers of Liens specified in Paragraph 14.07.A.2 and as approved by Owner, Contractor may furnish receipts or releases in full and an affidavit of Contractor that: (i) the releases and receipts include all labor, services, material, and equipment for which a Lien could be filed; and (ii) all payrolls, material and equipment bills, and other indebtedness connected with the Work for which Owner might in any way be responsible, or which might in any way result in liens or other burdens on Owner's property, have been paid or otherwise satisfied. If any Subcontractor or Supplier fails to furnish such a release or receipt in full, Contractor may furnish a bond or other collateral satisfactory to Owner to indemnify Owner against any Lien.

B. *Engineer's Review of Application and Acceptance:*

1. If, on the basis of Engineer's observation of the Work during construction and final inspection, and Engineer's review of the final Application for Payment and accompanying documentation as required by the Contract Documents, Engineer is satisfied that the Work has been completed and Contractor's other obligations under the Contract Documents have been fulfilled, Engineer will, within ten days after receipt of the final Application for Payment, indicate in writing Engineer's recommendation of payment and present the Application for Payment to Owner for payment. At the same time Engineer will also give written notice to Owner and Contractor that the Work is acceptable subject to the provisions of Paragraph 14.09. Otherwise, Engineer will return the Application for Payment to Contractor, indicating in writing the reasons for refusing to recommend final payment, in which case Contractor shall make the necessary corrections and resubmit the Application for Payment.

C. *Payment Becomes Due:*

Copyright © 2007 National Society of Professional Engineers for EJCDC. All rights reserved.

1. Thirty days after the presentation to Owner of the Application for Payment and accompanying documentation, the amount recommended by Engineer, less any sum Owner is entitled to set off against Engineer's recommendation, including but not limited to liquidated damages, will become due and will be paid by Owner to Contractor.

14.08 *Final Completion Delayed*

A. If, through no fault of Contractor, final completion of the Work is significantly delayed, and if Engineer so confirms, Owner shall, upon receipt of Contractor's final Application for Payment (for Work fully completed and accepted) and recommendation of Engineer, and without terminating the Contract, make payment of the balance due for that portion of the Work fully completed and accepted. If the remaining balance to be held by Owner for Work not fully completed or corrected is less than the retainage stipulated in the Agreement, and if bonds have been furnished as required in Paragraph 5.01, the written consent of the surety to the payment of the balance due for that portion of the Work fully completed and accepted shall be submitted by Contractor to Engineer with the Application for such payment. Such payment shall be made under the terms and conditions governing final payment, except that it shall not constitute a waiver of Claims.

14.09 *Waiver of Claims*

A. The making and acceptance of final payment will constitute:

1. a waiver of all Claims by Owner against Contractor, except Claims arising from unsettled Liens, from defective Work appearing after final inspection pursuant to Paragraph 14.06, from failure to comply with the Contract Documents or the terms of any special guarantees specified therein, or from Contractor's continuing obligations under the Contract Documents; and

2. a waiver of all Claims by Contractor against Owner other than those previously made in accordance with the requirements herein and expressly acknowledged by Owner in writing as still unsettled.

ARTICLE 15 – SUSPENSION OF WORK AND TERMINATION

15.01 *Owner May Suspend Work*

A. At any time and without cause, Owner may suspend the Work or any portion thereof for a period of not more than 90 consecutive days by notice in writing to Contractor and Engineer which will fix the date on which Work will be resumed. Contractor shall resume the Work on the date so fixed. Contractor shall be granted an adjustment in the Contract Price or an extension of the Contract Times, or both, directly attributable to any such suspension if Contractor makes a Claim therefor as provided in Paragraph 10.05.

15.02 *Owner May Terminate for Cause*

A. The occurrence of any one or more of the following events will justify termination for cause:

Copyright © 2007 National Society of Professional Engineers for EJCDC. All rights reserved.

1. Contractor's persistent failure to perform the Work in accordance with the Contract Documents (including, but not limited to, failure to supply sufficient skilled workers or suitable materials or equipment or failure to adhere to the Progress Schedule established under Paragraph 2.07 as adjusted from time to time pursuant to Paragraph 6.04);

2. Contractor's disregard of Laws or Regulations of any public body having jurisdiction;

3. Contractor's repeated disregard of the authority of Engineer; or

4. Contractor's violation in any substantial way of any provisions of the Contract Documents.

B. If one or more of the events identified in Paragraph 15.02.A occur, Owner may, after giving Contractor (and surety) seven days written notice of its intent to terminate the services of Contractor:

1. exclude Contractor from the Site, and take possession of the Work and of all Contractor's tools, appliances, construction equipment, and machinery at the Site, and use the same to the full extent they could be used by Contractor (without liability to Contractor for trespass or conversion);

2. incorporate in the Work all materials and equipment stored at the Site or for which Owner has paid Contractor but which are stored elsewhere; and

3. complete the Work as Owner may deem expedient.

C. If Owner proceeds as provided in Paragraph 15.02.B, Contractor shall not be entitled to receive any further payment until the Work is completed. If the unpaid balance of the Contract Price exceeds all claims, costs, losses, and damages (including but not limited to all fees and charges of engineers, architects, attorneys, and other professionals and all court or arbitration or other dispute resolution costs) sustained by Owner arising out of or relating to completing the Work, such excess will be paid to Contractor. If such claims, costs, losses, and damages exceed such unpaid balance, Contractor shall pay the difference to Owner. Such claims, costs, losses, and damages incurred by Owner will be reviewed by Engineer as to their reasonableness and, when so approved by Engineer, incorporated in a Change Order. When exercising any rights or remedies under this Paragraph, Owner shall not be required to obtain the lowest price for the Work performed.

D. Notwithstanding Paragraphs 15.02.B and 15.02.C, Contractor's services will not be terminated if Contractor begins within seven days of receipt of notice of intent to terminate to correct its failure to perform and proceeds diligently to cure such failure within no more than 30 days of receipt of said notice.

E. Where Contractor's services have been so terminated by Owner, the termination will not affect any rights or remedies of Owner against Contractor then existing or which may thereafter accrue. Any retention or payment of moneys due Contractor by Owner will not release Contractor from liability.

Copyright © 2007 National Society of Professional Engineers for EJCDC. All rights reserved.

F. If and to the extent that Contractor has provided a performance bond under the provisions of Paragraph 5.01.A, the termination procedures of that bond shall supersede the provisions of Paragraphs 15.02.B and 15.02.C.

15.03 *Owner May Terminate For Convenience*

A. Upon seven days written notice to Contractor and Engineer, Owner may, without cause and without prejudice to any other right or remedy of Owner, terminate the Contract. In such case, Contractor shall be paid for (without duplication of any items):

1. completed and acceptable Work executed in accordance with the Contract Documents prior to the effective date of termination, including fair and reasonable sums for overhead and profit on such Work;

2. expenses sustained prior to the effective date of termination in performing services and furnishing labor, materials, or equipment as required by the Contract Documents in connection with uncompleted Work, plus fair and reasonable sums for overhead and profit on such expenses;

3. all claims, costs, losses, and damages (including but not limited to all fees and charges of engineers, architects, attorneys, and other professionals and all court or arbitration or other dispute resolution costs) incurred in settlement of terminated contracts with Subcontractors, Suppliers, and others; and

4. reasonable expenses directly attributable to termination.

B. Contractor shall not be paid on account of loss of anticipated profits or revenue or other economic loss arising out of or resulting from such termination.

15.04 *Contractor May Stop Work or Terminate*

A. If, through no act or fault of Contractor, (i) the Work is suspended for more than 90 consecutive days by Owner or under an order of court or other public authority, or (ii) Engineer fails to act on any Application for Payment within 30 days after it is submitted, or (iii) Owner fails for 30 days to pay Contractor any sum finally determined to be due, then Contractor may, upon seven days written notice to Owner and Engineer, and provided Owner or Engineer do not remedy such suspension or failure within that time, terminate the Contract and recover from Owner payment on the same terms as provided in Paragraph 15.03.

B. In lieu of terminating the Contract and without prejudice to any other right or remedy, if Engineer has failed to act on an Application for Payment within 30 days after it is submitted, or Owner has failed for 30 days to pay Contractor any sum finally determined to be due, Contractor may, seven days after written notice to Owner and Engineer, stop the Work until payment is made of all such amounts due Contractor, including interest thereon. The provisions of this Paragraph 15.04 are not intended to preclude Contractor from making a Claim under Paragraph 10.05 for an adjustment in Contract Price or Contract Times or otherwise for expenses or damage directly attributable to Contractor's stopping the Work as permitted by this Paragraph.

Copyright © 2007 National Society of Professional Engineers for EJCDC. All rights reserved.

ARTICLE 16 – DISPUTE RESOLUTION

16.01 *Methods and Procedures*

A. Either Owner or Contractor may request mediation of any Claim submitted to Engineer for a decision under Paragraph 10.05 before such decision becomes final and binding. The mediation will be governed by the Construction Industry Mediation Rules of the American Arbitration Association in effect as of the Effective Date of the Agreement. The request for mediation shall be submitted in writing to the American Arbitration Association and the other party to the Contract. Timely submission of the request shall stay the effect of Paragraph 10.05.E.

B. Owner and Contractor shall participate in the mediation process in good faith. The process shall be concluded within 60 days of filing of the request. The date of termination of the mediation shall be determined by application of the mediation rules referenced above.

C. If the Claim is not resolved by mediation, Engineer's action under Paragraph 10.05.C or a denial pursuant to Paragraphs 10.05.C.3 or 10.05.D shall become final and binding 30 days after termination of the mediation unless, within that time period, Owner or Contractor:

1. elects in writing to invoke any dispute resolution process provided for in the Supplementary Conditions; or

2. agrees with the other party to submit the Claim to another dispute resolution process; or

3. gives written notice to the other party of the intent to submit the Claim to a court of competent jurisdiction.

ARTICLE 17 – MISCELLANEOUS

17.01 *Giving Notice*

A. Whenever any provision of the Contract Documents requires the giving of written notice, it will be deemed to have been validly given if:

1. delivered in person to the individual or to a member of the firm or to an officer of the corporation for whom it is intended; or

2. delivered at or sent by registered or certified mail, postage prepaid, to the last business address known to the giver of the notice.

17.02 *Computation of Times*

A. When any period of time is referred to in the Contract Documents by days, it will be computed to exclude the first and include the last day of such period. If the last day of any such period falls on a Saturday or Sunday or on a day made a legal holiday by the law of the applicable jurisdiction, such day will be omitted from the computation.

Copyright © 2007 National Society of Professional Engineers for EJCDC. All rights reserved.

17.03 *Cumulative Remedies*

A. The duties and obligations imposed by these General Conditions and the rights and remedies available hereunder to the parties hereto are in addition to, and are not to be construed in any way as a limitation of, any rights and remedies available to any or all of them which are otherwise imposed or available by Laws or Regulations, by special warranty or guarantee, or by other provisions of the Contract Documents. The provisions of this Paragraph will be as effective as if repeated specifically in the Contract Documents in connection with each particular duty, obligation, right, and remedy to which they apply.

17.04 *Survival of Obligations*

A. All representations, indemnifications, warranties, and guarantees made in, required by, or given in accordance with the Contract Documents, as well as all continuing obligations indicated in the Contract Documents, will survive final payment, completion, and acceptance of the Work or termination or completion of the Contract or termination of the services of Contractor.

17.05 *Controlling Law*

A. This Contract is to be governed by the law of the state in which the Project is located.

17.06 *Headings*

A. Article and paragraph headings are inserted for convenience only and do not constitute parts of these General Conditions.

Copyright © 2007 National Society of Professional Engineers for EJCDC. All rights reserved.

Chapter II.7
SUBMITTAL REQUIREMENTS

This chapter provides details about the various submittal requirements (in additional to plans) for reviews. It is arranged into the following sections:

1.0 DESIGN SUBMITTAL REQUIREMENTS
2.0 CONSTRUCTION SUBMITTAL REQUIREMENTS
3.0 TIME LIMITATION OF APPROVAL
4.0 INFORMATION FOR PLAN PREPARATION
5.0 PLAN SHEET SEQUENCE
6.0 STORM DRAIN PLAN PREPARATION -RESERVED
7.0 LANDSCAPING PLANS
8.0 MATCHING INTO EXISTING ADJACENT IMPROVEMENTS -RESERVED
9.0 RIGHT-OF-WAY MAPS AND PLANS -RESERVED
10.0 ROADWAY CROSS SECTIONS - RESERVED
11.0 REPORT FORMAT
12.0 CAD STANDARDS

1.0 DESIGN SUBMITTAL REQUIREMENTS

1.1 In Addition to the Required Plans, Review Submittals Shall Include the Following Information (As it Applies to the Project):

- Drainage Report
- Drainage Implementation Plan
- Geotechnical Report
- Traffic Impact Study (TIS)
- Water and Sewer Availability
- Other items as required

Note: The Report Format can be found in Section 11 of this Chapter.

1.2 REVIEW SETS FOR RESIDENTIAL/COMMERCIAL DEVELOPMENTS

Each plan set submitted for review shall consist of the following:

1. Eight full size (24" x 36") copy of the design plans.
2. Appropriate supporting documentation & calculations (See Section 1.1 of this

Chapter).

3. Project/Plan Submittal Letter, See Appendix A, from the Design Engineer and the original redlined plans/reports, if applicable, supplied to the Consultant by the reviewer. Submittals without a submittal letter or the original redline comments will not be accepted, and will be returned for resubmittal.

NOTE: All submittals shall be reviewed for quality control by the applicant before they are submitted for review. Submittals that do not address the redline comments made by the reviewer at a previous submittal will be returned without further review to the Design Engineer. At any point during the review process - if the City reviewer determines that a significant change has occurred to the project plans or the design - then a new review process may be started.

1.3 FINAL SUBMITTAL OF APPROVED CONSTRUCTION DOCUMENTS

Once the City has accepted all letters, reports, and construction plans indicating that they are acceptable for quality, the following information shall be submitted to the City.

1.4 RESIDENTIAL/COMMERCIAL DEVELOPMENTS

The final submittal for Developer Sponsored projects shall consist of the following information:

1. Signed and sealed Mylars with Final Approved Plat of the Construction Project Plans for City signature.

Once the Mylars have been signed by the City and returned to the Design Engineer, the following information shall be submitted:

1. Electronic PDF version (600 DPI minimum resolution) of all accepted plan sheets and supporting documentation on CD/DVD. (i.e. construction plans, estimates, all reports, and etc.)
2. One (1) full size (24" x 36"), copies of the accepted construction plans.
3. Two (2) half size (11" x 17"), copies of the design plans.

1.5 CAPITAL PROJECTS

The final submittal for Capital Projects shall consist of the following information:

1. Signed and sealed Mylars of the Construction Project Plans for City signature.

Once the Mylars have been signed by the City and returned to the Design Engineer, the following information shall be submitted:

1. Electronic PDF version (600 DPI minimum resolution) of all accepted plan sheets and supporting documentation on CD/DVD. (i.e. construction plans, estimates, all reports, and etc.)

2.0 CONSTRUCTION SUBMITTAL REQUIREMENTS

When the project is completed the following information will need to be submitted to the City.

2.1 "RECORD DRAWINGS" SUBMITTAL REQUIREMENTS

Construction "Record Drawings" will be required for all improvements within City of Rio Rancho's right-of-way or easements. All submittals will be reviewed and accepted in accordance with the following procedures:

2.1.1 Developer Projects:

1. "Working Record Drawing" plans shall be submitted, by the Contractor, as redline drawings with correct survey data, as stated in Section 2.2.1 of this Chapter, for review, once a month, to the Developer's Engineer of Record. These drawings will need to be initialed and dated by the reviewer for them to be valid. The reviewed plans will be on one 24" x 36" set.
2. At the end of the project/subdivision, the Contractor will provide the Developer's Engineer of Record the valid redline drawings with correct survey data, as stated in Section 2.2.1 of this Chapter. The Developer's Engineer of Record will then make digital changes to the original Construction Plans. A set of Mylar Final Record Drawings stamped and sealed by a Professional Engineer or Registered Land Surveyor with the "Record Drawing Certification (Appendix C)" approval block included will then be submitted to the City along with a CD/DVD containing one multipage PDF (600 DPI minimum resolution) of the Final Record Drawings. On any sheet where a change to the original construction drawings has been made Redrawn for Record shall be placed on that sheet.
3. The Developer will also provide the City with the digital changes in accordance with Section 2.2 of this Chapter.

2.1.2 Capital Projects:

1. "Working Record Drawing" plans shall be submitted, by the Contractor, as redline drawings with correct survey data, as stated in Section 2.2.1 of this Chapter, for review, once a month, to the Construction Management Team. If the "Working Record Drawing" plans are not adequate then that month's progress payment will be denied until the deficiency is corrected. These drawings will need to be initialed and dated by the reviewer for them to be valid. The reviewed plans will be on one 24" x 36" set.
2. At the end of the project, the Contractor will provide the Construction Management Team the valid redline drawings with correct survey data, as stated in Section 2.2.1 of this Chapter. The Construction Management Team will then make digital changes to the original Construction Plans unless the City includes these changes in Contractor's Contract. A set of Mylar Final Record Drawings stamped and sealed by a Professional Engineer or Registered Land Surveyor with

the "Record Drawing Certification (Appendix C)" approval block included will then be submitted to the City along with a CD/DVD containing one multipage PDF (600 DPI minimum resolution) of the Final Record Drawings. On any sheet where a change to the original construction drawings has been made Redrawn for Record shall be placed on that sheet.

3. The Construction Management Team will also provide the City with the digital changes in accordance with Section 2.2 of this Chapter.

Note: The Construction Management Team will be the Firm hired by the City to perform Construction Management Duties unless otherwise specified.

2.2 DIGITAL RECORD DRAWING AND FILE REQUIREMENTS

1. Once the Final Record Drawings have been approved and accepted by the method stated in Section 2 of this Chapter, a CD/DVD containing either GIS compatible files (shapefiles) or AutoCAD drawing files (through release 2004) and InRoads files used to create the Record Drawings (AutoCAD, and PDF) shall be submitted to the City. These submitted files shall include all survey data as stated in Section 2.2.1 of this Chapter and shall be in the City's schema for structure (attribute table shall match the City's). Please contact the City Project Manager or the Records & GIS Section for the appropriate file schema.

   a. If GIS files will be submitted in lieu of the AutoCAD documentation, the shapefiles required shall be, but not limited to,:

      i. Lot Lines (Parcels)
      ii. Easements as listed on the Project Plat
      iii. Road Centerlines
      iv. Curb & Gutter
      v. Sidewalks
      vi. Water & Sewer Utilities (Must be separate files)

         1. These files shall include any infrastructure related to water and sewer. Therefore if a lift station, booster station, etc. was installed as part of the project this needs to be shown.

         2. Manholes, valves, pressure release valves (PRVs), and fire hydrants shall all be included in these files where applicable.

      vii. Traffic Infrastructure

         1. Signs

         2. Signal Infrastructure

      viii. Drainage

         1. Strom Drain Infrastructure
         2. Ponds
         3. Box Culverts

2.2.1 Survey Data Required for all Hardcopy or Electronic Files

i. Street, Storm Drains, and Grading & Drainage Plans

1. Station for all grade breaks.
2. Back of curb offset dimension at all changes in alignment.
3. Top of curb, gutter and pavement centerline elevations at all grade breaks, curb return, valley gutters, plus any other location necessary to adequately show drainage.
4. Survey monuments.
5. Street centerline station and offset dimensions to the storm drain mainline at all changes in alignment and/or changes in grade.
6. Street centerline station and offset dimension to all structures and changes in alignment.
7. Rim and invert elevations for each manhole, catch basin, and miscellaneous structures.
8. The pipe material and diameter that was actually installed shall be shown on all plan and/or profile sheets.
9. Station, location and limits of utility encasements, caps, pipe supports, etc.
10. Station, location, limits and dimensions of facilities which are abandoned in place, including the size, depth and type of materials remaining.
11. Elevations shall be provided at all drainage control points (i.e. detention overflow point, tops and bottoms of detention basins, drain rim, valley gutters, curbs, etc.).
12. Dimensions shall be provided for all detention areas.
13. Drainage Control (detention) Basin Calculations revised, with written approval, to the as-built condition; and certification of compliance.
14. Location of all existing structures (i.e. buildings, drainage structures) shall be provided.
15. Dimensions and elevations of all pipe, culvert, scupper, catch basin, channel top width and bottom width, channel longitudinal slope changes, grate and invert elevations.
16. Elevations at the end of laterals and one elevation shot midpoint between manholes.
17. Elevations at the center of the building pad, all four corners, and four elevation shots for lot slope and drainage.
18. Elevations of the tops and toes of all slopes at intervals of 50 feet.

ii. Water Plans

1. Street centerline station and offset dimensions to:
    a. All fire hydrants and fittings (i.e. valves, bend, tees).
    b. Main line at all changes in horizontal and vertical alignment.
    c. All horizontal control points (i.e. centerline intersects, PC, PT).

2. Dimension to all operating nuts referenced to the water main on valves with offset operating devices.
3. If the designed topography does not allow for the service standards to be used, centerline station and offset to each service tap; size of tap and dimension to nearest side property line are required. If topography allows for the standard to be used, then a survey point is only required at the end of the service for location purposes.
4. Note centerline station, offset and elevations to all changes in vertical alignment (i.e. dips, bends, etc. required to avoid conflicts with other utilities).
5. The installed water pipe material and diameter shall be shown on as-built plan and/or profile sheets.
6. Station, location and limits of utility encasements, caps, pipe supports, etc.
7. Station, location, limits and dimensions of facilities which are abandoned in place, including the size, depth and type of materials remaining.
8. As long as the pipe depth follows current City standards as specified in DPM Chapter II.1, survey points for the water line are only required at the fittings for grade changes. If the pipe does not follow the aforementioned, two top of pipe elevation shots equal distance between valves are required.

iii. Sewer Plans

1. Street centerline station and offset dimension from street centerline to main line at manholes and all changes in alignment.
2. Sewer line station at centerline of each manhole.
3. Calculated slope between manholes.
4. Sewer line stationing at centerline of each service tap at 90 degrees to main; if not installed 90 degrees to main, station and offset to end of each service tap.
5. The installed sewer pipe material and diameter shall be shown on all plan and/or profile sheets.
6. Station, location and limits of utility encasements, caps, pipe supports, etc.
7. Station, location, limits and dimensions of facilities which are abandoned in place, including the size, depth and type of materials remaining.
8. Rim and invert elevations.
9. If the designed topography does not allow for the service standards to be used, elevations at the end of the laterals are required. If topography allows for the standard to be used, then a survey point is only required at the end of the service lateral for location purposes.
10. One elevation shot midpoint between manholes.

iv. Traffic Plans

1. Foundation location and modifications to the structural details noted.
2. Conduit location, size, alignments, and type noted.
3. Cabinet location, dimensions, and type.
4. Size, type, and location of battery backup for power pedestals.
5. Power Service Address.
6. Phone or fiber optic communication line location and connection with applicable service address and phone number.
7. Pole location and types.
8. Mast arm type, length and pendent locations.
9. Head locations and types.
10. Loop detector location, length, and type.
11. Changes to items in the schedules.
11. Interconnect conduit location and pull box type and location.
12. Sign base location, size or type changes from the approved plan.
13. Striping layout changes from the approved plan noted.
14. Changes to location, spacing, and type of raised pavement markers.
15. Traffic Conduit: All manholes and pull boxes.
16. Locations of all streetlights pull boxes, and service locations.

v. **General**

1. Street Centerlines
2. All right of way and easement lines with docket or recordation numbers are shown on included approved plat.

a. The CD/DVD shall be labeled with the Contractor's name, the Engineer's name, the Project/Subdivision name, the Project/Subdivision location, and the Final Inspection date. The AutoCAD file shall be the file used to generate the final Record Drawings (hard copy). The AutoCAD file shall depict the final Mylar Record Drawings with the rights-of-way and the project/subdivision tied to the state plane coordinates.

Note: The elevations required in Section 2.2.1 must be performed under the supervision of a Registered Land Surveyor.

2.3 OTHER SUBMITTAL REQUIREMENTS

1. Materials List of all items installed during the project.
2. New Street Data Sheet Appendix D. This will need to be completed by the Contractor on the Final Inspection. City concurrence is required before submitting this form as part of the project closeout.
3. Certificate of Completion and Acceptance. Certification of Acceptance of Infrastructure completed pursuant to a Subdivision Improvements Agreement (SIA) and/or Development Agreement (DA), and Release from Financial Guarantee shall be obtained from the City's Development Review Section-Engineering Division and submitted as part of the project closeout package.
4. Actual Cost Information. Actual cost information corresponding with the itemized Materials List of capital contributed. Actual cost information is required by the

City as a condition of acceptance and/or release of financial guarantee related to the development. Such cost information include, but is not limited to, final invoices of the developer's prime contractor for infrastructure improvements and contract pricing for land and right of way dedications.

3.0 TIME LIMITATION OF APPROVAL

The City approval of residential developments, commercial developments, and road construction plans shall be valid for a time period of one (1) year. Plans NOT under construction within this time period are to be resubmitted and approved by the City prior to construction.

4.0 INFORMATION FOR PLAN PREPARATION

4.1 GENERAL PLAN INFORMATION

Plans shall be prepared using the current City of Rio Rancho standards and drawings first, then NMDOT standards and drawings, unless directed by the Project Manager. Bridge standard details and specifications shall be the latest version of NMDOT standards and drawings unless a City of Rio Rancho equivalent exists.

4.2 GENERAL PLAN PREPARATION

4.2.1 Cover Sheet

The Cover Sheet, included in the City's AutoCAD Standard borders, shall contain the following information:

1. The Consultant's seal
2. Key Map
3. The appropriate signatory blocks.
4. A project vicinity map. Standard Zone Atlas maps may be used in preparing the vicinity map.
5. Identification of a minimum of two City benchmarks.

    a. Identify the City benchmarks by number, description, brief location, and elevation.

6. A plan sheet index listing shall be provided, either on the cover sheet or a separate sheet located near the front of the plan set. *Note: Plan and Profile sheets may be summarized in the sheet index (example: "Sheets 3 through 7").*

4.3 TITLE BLOCKS FOR NON-COVER SHEETS

All original drawing sheets shall have a title block along the right hand side of the sheet. This title block, included in the City's AutoCAD Standards, shall have the following information clearly displayed:

1. Name of Engineering Consulting Firm preparing the plans.
2. The Project Name.
3. The sheet number and the total number of sheets in the plan set.
1. The appropriate type of plan sheet (i.e. typical sections, details, plan & profile, etc.) shall be indicated.
2. City of Rio Rancho logo.

4.4 LEGEND AND GENERAL NOTES

The Legend and General Notes shall be located on the second sheet or near the front of the plan set. The Design Engineer can obtain the latest version of the General Notes Sheet from the Department of Public Work's website. The Consultant can add notes as they pertain to each project as necessary. The note additions must be identified under the header "SPECIAL NOTES". Notes relieving the Engineer from utility coordination and/or line location will not be allowed (all due diligence shall be completed to show existing utilities on the plans).

The Standard Legend can also be found on the Department of Public Work's website.

The Consultant shall use the symbols & abbreviations found on this sheet consistently throughout the entire plan set.

4.5 PLAN SHEET ORIENTATION AND LAYOUT

In general, project work shall be oriented on the sheets such that north will be pointing "up" or "to the right" on the sheet. Normally, no more than 1,000 feet of street length should be shown per plan sheet. This allows room on the right hand side of the plan sheet for the Construction Notes or Keyed Notes.

For curvilinear streets, the drawing shall be oriented so that the north arrow points to the top or the right edge of the sheet as appropriate to a practical representation of the curved portion of the street depicted. If the orientation of the street is northwest-southeast or southwest-northeast, place the western-most end of the street segment near the left edge of the sheet.

Construction centerline stationing, at intervals of 100 feet, shall be shown on both the plan and profile views and shall run from left to right. Subsequently, stationing is read from west to east or from south to north.

Portions of the same street or intersection shall not be shown beyond match lines on separate sheets. Match line information shall provide stationing and matching sheet number.

4.6 GENERAL PLAN AND PROFILE SHEETS

In general, most plan/profile layouts shall be shown on standard half plan/half profile sheets. In the case where steep grades or wide plan views prohibit plotting on these sheets, separate full plan and full profile sheets may be used.

Plan views shall show the limits of existing ROW and call out new ROW limits as well as construction easement areas.

Sheet number references for storm drain plans, connector pipe plans, etc. shall be noted on the plans.

All points of connection to existing facilities shall be clearly shown and the appropriate elevations indicated on the plans.

4.7 HORIZONTAL GEOMETRICS

As a general rule, the following pertains to roadway geometrics:

Roadway centerline bearings and distances shall be shown on the plans.

All tangent points, point of intersection (P.I.) of curvilinear sections, beginning and ending taper points and monument lines of all intersecting streets shall be labeled and stationed.

Provide top of curb and flow line elevations at returns and valley gutters.

On curved sections, construction centerline stationing shall be shown along the centerline of the curve, and not the tangent lines. Curve data shall be shown on same sheet as the curve.

The plans shall show dimensions from monument line/construction centerline to ROW and to existing curbs.

4.8 SURVEY CONTROL

See DPM Chapter II.6.

4.9 TOPOGRAPHY AND NOTATION

(a) All subdivision names, block numbers, lot numbers, names of major business, schools, fire stations, and other public facilities shall be shown on the plans.

(b) The Final ROW and easement limits shall be shown on the plans as a heavy line. Existing ROW where it differs from the new ROW line shall not be shown for Major Street projects.

(c) Label all existing features. Include description and dimension as needed,

(g) All topography to at least 10 feet beyond the ultimate ROW or easements shall be shown. Standard symbols shall be used where applicable.

(n) Where certain items such as monuments, water valves, etc., are supposed to be, according to plan records, but cannot be found in the field, they shall be labeled "NOT FOUND" or "NF" on the plans.

5.0 PLAN SHEET SEQUENCE

5.1 PLAN SHEET SEQUENCE FOR RESIDENTIAL/COMMERCIAL DEVELOPMENT

Sheet 1: Signature Cover Sheet, including Index of Sheets
Sheet 2: General Notes Sheet
Sheet 3: Standard Legend and Abbreviations
Sheet 4: Subdivision Plat
Sheet 5: Overall Grading Plan
Sheet 6: Yard/Retaining Wall Plan & Profiles
Sheet 7: Yard/Retaining Wall Details
Sheet 8: Typical Sections, Pavement Structural Sections, etc.
Sheet 9: Plan/Profile and other sheets as needed in the following order:

1) Median Island Details
2) Plan and Profile of Paving
3) Intersection Design Sheets for Major Intersections
6) Plan and Profile of Storm Drain
7) Profiles of Catch Basins and Connector Pipes
8) City Standard Details (no less than 8 and no more than 10 details per sheet)
9) Special Detail Sheets
10) Bridge and Structural Detail Plans (see page 27-14 for plan sheet order)
11) Landscaping/Irrigation Plans
12) Erosion and Sediment Control Plan
13) Erosion and Sediment Control Details/calculations
14) Traffic Signing & Striping Plans
15) Traffic Signal Plans
16) Street Lighting Plans
17) Traffic Control Plans

Sheet X: Typical Section showing location of water and sewer line
Sheet X: Plan/Profile and other sheets as needed in the following order:

1) Plan and Profile
2) City Standard Details (no less than 8 and no more than 10 details per sheet)
3) Special Detail Sheets

5.2 SHEET SEQUENCE BRIDGE AND STRUCTURAL PLANS

Typical sheets for a bridge or structural plans are as follows:

1. Typical Legend, Notes, and Detail Sheets, plus notes specific to the bridge project
2. Paving plans and profile sheet (if bridge is also part of a paving project)
3. Detour Plan and Profile, if required, showing all details required for the detour in plan and profile.
4. Plan and Profile for any water, sewer or irrigation alterations to be included as a part of the bridge construction
5. Soil boring log sheet showing all obtained soils information
6. Abutment details
7. Pier details
8. Deck details

9. Miscellaneous details
10. Handrail details.

5.3 SHEET SEQUENCE FOR WATER AND SANITARY SEWER PLANS

All designs requiring water or sanitary sewer shall be designed in accordance with Chapter II.4 – Water and Wastewater Infrastructure Design of the CORR Development Process Manual.

If separate from roadway, drainage, or traffic improvements, as in offsite plans, then water and sewer designs shall be under a separate cover sheet following the sequence below:

Sheet 1: Signature Cover Sheet, including Index of Sheets
Sheet 2: Legend, Abbreviations, and Notes Sheet
Sheet 3: Plan Sheet Key Map (place on Cover Sheet if size permits)
Sheet 4: Water/Sewer Quantity Summary Sheet
Sheet 5: Typical Section showing location of water and sewer line
Sheet 6: Plan/Profile and other sheets as needed in the following order:
4) Plan and Profile
5) City Standard Details (no less than 8 and no more than 10 details per sheet)
6) Special Detail Sheets

6.0 STORM DRAIN PLAN PREPARATION -RESERVED

7.0 LANDSCAPING PLANS

7.1 SHEET SEQUENCE

Refer to Subsection 5.1 for sequence of plan sheets.

8.0 MATCHING INTO EXISTING ADJACENT IMPROVEMENTS –RESERVED

9.0 RIGHT-OF-WAY MAPS AND PLANS – RESERVED

10.0 ROADWAY CROSS SECTIONS - RESERVED

11.0 REPORT FORMAT

11.1 GENERAL FORMATTING GUIDELINES

Here are some general formatting guidelines that apply to the entire report:

- Use a 1-inch margin at the top, bottom, left, and right.
- Use single spaced typing
- The entire document should be fully justified.

The following pages and headings should be incorporated into the document at a minimum:

Title Page – Project Name, Type of Report, Author's name, who it is prepared for, Approval Block, and the date. Indicate whether the report is a "preliminary" or "final" submittal.

Table of Contents – include all sections and subsections w/ appropriate page numbers.

List of Appendices - can be provided on the same page as the List of Tables, include page numbers.

Introduction – Introduces the reader to the material and the area of interest. This section should provide a project description and purpose of the report.

Methods and Procedures – Provide schematic diagrams where appropriate. Organize methods/procedures used in the analysis in chronological order.

Conclusions - Summarize the results of the study in terms of original motivation, and important conclusions from the analysis.

References – Use full citations including titles of reports. If using numbered references, numbers should be according to chronological appearance in the text.

Appendices - Appendices may include derivations or tabulated data which you feel the reader should have access to, but are not appropriate for the body of the article.

All the supporting data, calculations, analysis, and information contained in the appendix of the report should be discussed and summarized in the body of the report. The information contained on the aapendix is only for reference to be used by the reviewer if needed.

All information, including exhibits, tables, and calculations, shall be presented in the report in a well organized and easy to follow format.

12.0 CAD STANDARDS

12.1 Coordinates:
See Chapter II.6.

12.2 Drawing / Sheet Naming Convention:
Follow the drawing/plan sheet naming convention as outlined on the City of Rio Rancho Department of Public Works CAD Standards sheet found in Appendix H.

CHAPTER II.7 – APPENDICES

Appendix A	Project/Plan Submittal Letter
Appendix B	Final Project Submittal Checklist
Appendix C	City of Rio Rancho Standard "Record Drawings Certification Statement"
Appendix D	New Street Data Sheet
Appendix E	Street Light Layout Checklist
Appendix F	City of Rio Rancho Right-of-Way Acquisition Area Calculation Form
Appendix G	CAD File Layering Conventions
Appendix H	Sheet Naming Conventions

Appendix A
Project/Plan Submittal Letter
Public Works Department

Project Manager Name
Department of Public Works – Development Section
3200 Civic Center Circle
Rio Rancho, NM 87144

Date: XXXXXX

PROJECT/SUBDIVISION NAME
LEGAL DESCRIPTION (IF APPLICABLE)

Dear Project Manager's Name:

With this Project/Plan Submittal Letter I, the Engineer of Record for the said PROJECT/SUBDIVISION, do hereby certify the following:

1. That all submitted plans, reports, and etc. comply with current City of Rio Rancho Development Process Manual Chapters, City of Rio Rancho Standard Details, and Codes and Ordinances;
2. That all previous redline comments have been included in this submittal or that a valid accepted consensus has been reached where a comment cannot be incorporated (attach documentation);
3. That the submittal is complete and ready for review. If it is found that the submittal is incomplete, the City will return without any review.
4. The submittal requires one of the following (circle one):
    a. No Variances;
    b. Attached Variances.

Certification to the aforementioned by: ENGINEER OF RECORD

Seal and Sign
Using P.E. Stamp

Appendix B
Final Project Submittal Checklist
Department of Public Works

Unless otherwise noted below, submittal documentation should be on a CD/DVD. One complete copy of the entire submittal package is required. (City should use the checklist previously developed.)

Project Name:_____ Date:_____

Documents: (*2 sets of CD/DVDs per submittal)*

___ Final Drainage Report with all amendments and approved changes
___ Sewer Report with all amendments and approved changes
___ Water Report with all amendments and approved changes
___ Traffic Impact Study with all amendments and approved changes
___ Geotechnical Report
___ Pad Certifications
___ All physical construction test results (compaction, concrete, asphalt, etc.)
___ All construction permits
___ All Operation and Maintenance Manuals (including shop drawings)
___ **Detention Basin Capacity Certifications** (certified by a registered surveyor or engineer for all detention basins. The certification should reference the volume in acre feet referenced in the drainage report; a sketch of the Record Drawings basin; calculations of the as- built volume in acre feet.

Approval letters from Utilities or Agencies where applicable: *(2 sets of CD/DVDs per submittal)*

___ Proof of payment of all fees as stipulated in the approval of Final Plat
___ Water Availability Letter issued by the Department of Public Works Utilities Division *
___ Sewer Availability Letter issued by the Department of Public Works Utilities Division *
___ Southern Sandoval County Arroyo Flood Control Authority *
___ Sandoval County Environmental Services Department Approval of Construction

**Letter shall state the agency has approved the construction and the Record Drawings.*

Recorded Plat/Map of Dedication: **(Required on CD/DVD and HARD COPY – 1 set of each per submittal)**

___ 24" by 36" black line
___ Half size (no larger than 11" X 17") black line
___ Submitted on CD/DVD

Record Drawings as Pertains to your Project: **(Required on 2 CD/DVDs - 1 Bond set AND 1 MYLAR set as listed below)**

___ Record Drawings plans – Grading and Drainage
___ Record Drawings plans – Water
___ Record Drawings plans – Sewer
___ Record Drawings plans – Paving
___ Record Drawings plans – Storm Drain

Additional Items: **(2 sets of CD/DVDs per submittal)**

___ Copy of the Punch List signed off by the inspector (***Must accompany the submittal*** **in order to be accepted)**
___ Proof of payment for Traffic Signals (if applicable)

NOTE: Required Hard Copy Size Requirements:

___ Record Drawings plans - printed - on 4 mil double matte for **mylar requirements**
___ Record Drawings plans - size 24" X 36" (absolute maximum size) black line bond
___ Record Drawings plans - half-size (no larger than 11" X 17") black line bond

Appendix C
Standard Engineer's "Record Drawings" Certification Statement

"Record Drawings" Engineer's Certification

I, (Engineer's Name), a Registered Professional Engineer in the State of New Mexico, have reviewed the Final Plat of (Project's/Subdivision's Name) and related relevant drainage plans, street plans and profiles, design and construction plans, and other improvement plans. I do hereby certify that I have made an inspection of those improvements described herein and find same to be built in accordance with the Preliminary and Final Plat except for the modifications specifically noted. I have attached hereto reasons for the modifications and relevant "Record Drawings" plans detailing the modifications.

Registered Professional Engineer Date

(List below, improvements certified, noting modifications.)

Released for Permitting

This set of plans has been reviewed for compliance with City of Rio Rancho requirements prior to issuance of construction permits. The City neither accepts nor assumes any liability for errors or omissions. This compliance review shall not prevent the City Public Works Director or City Engineer from requiring correction of errors or omissions in plans found to be in violation of any law, ordinance, or standard.

City Engineer Date

Appendix D
New Street Data Sheet

New Street Data Sheet (To Be Completed on Final Inspection)

Street Name (Plat): _____

Subdivision Name: _____

Number of Unique Street Sections: _____ (Due to: Different Construction Dates, Cross Section Variations, Asphalt Thickness, & etc.)

Note: If more sections are needed, please use another form.

Note: If the road section cannot be taken from street to street, it must be given an address or legal description for where the section ends. See example below.

Section 1:

From: _____

To: _____

Section Width (Asphalt Only): _____

Section Length (Along Centerline): _____

Section Thickness/Treatment: _____

Construction Date: _____

Section Classification (Circle One): Arterial Collector Residential

Section 2:

From: _____

To: _____

Section Width (Asphalt Only): _____

Section Length (Along Centerline): _____

Section Thickness/Treatment: _____

Construction Date: _____

Section Classification (Circle One): Arterial Collector Residential

Section 3:

From: _____

To: _____

Section Width (Asphalt Only): _____

Section Length (Along Centerline): _____

Section Thickness/Treatment: _____

Construction Date: _____

Section Classification (Circle One): Arterial Collector Residential

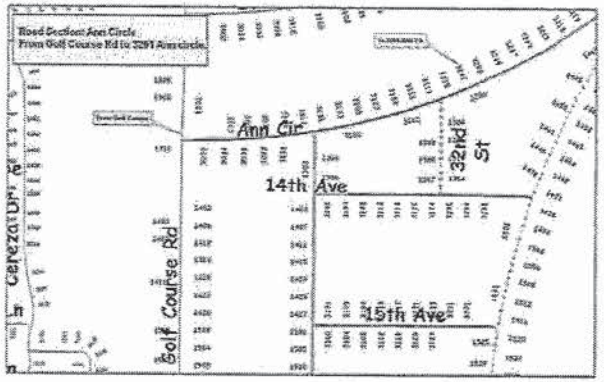

Completed by Contractor on final walkthrough with City Inspector.

Acceptance that all above data is complete and correct.

_____
Contractor Signature and Date

_____
City Inspector Signature and Date

Appendix E
Street Light Layout Checklist

Department of Public Works

(This form is not needed in my opinion. Check with Traffic Operations staff.)

Date: _____

Project Name: _____

Engineering Consulting Firm/Developer: _____

Department of Public Works Job No: _____

The purpose of this checklist is to guide the developers on street light layouts on residential subdivisions, apartments, condominiums, commercial and industrial projects.

This checklist serves to minimize redline comments on the check prints and to maintain consistency of the plan review process for streetlight layouts in the public right-of way. Plan approval and issuing permits depend on the compliance with the comments made on the check prints and this checklist. The engineer of record shall satisfy themselves of the completeness and accuracy of the design.

Please submit this checklist and the check prints with your next submittal.

If construction has not started within (1) year of the date of plan approval, or if there is a halt in construction of more than one (1) year, approval will become void and public streetlight plans shall be resubmitted for updating and re-approval.

GENERAL REQUIREMENTS

[ ] The street light plans must be submitted on 24' x 36" sheets.

[ ] City of Rio Rancho Standard border with approval block must be used.

[ ] The scale must be shown on the plans 1" = 20' or 1" = 40'

[ ] Graphic Scale

[ ] A north arrow is required on each sheet

[ ] A vicinity or site location map is required on the cover sheet

[ ] The developer's name, address and phone number must be shown on the cover sheet

[ ] The Street Light Design Professional name, address and phone number must be shown on the cover sheet

[ ] Project title block filled out with name and location of project

[ ] Project Number, Project Title

[ ] An index of sheets is required

[ ] Show and label all abutting streets

[ ] Show landscape and abutting street(s)

[ ] Show setbacks and proposed landscape concept

[ ] Show location of detentions basins and retaining walls

[ ] Identify location – show site and adjacent parcels

[ ] Show dimensions for FOC on all intersection street legs

[ ] Show existing and proposed driveway locations

[ ] Label adjacent zoning and land use

[ ] Show lot lines and dimensions

[ ] The current CORR General Notes must be shown on the cover or detail sheet

[ ] All plan sheets shall display construction notes pertinent to each sheet

[ ] Construction notes indicating all equipment to be installed, removed or relocated

[ ] The following information is required for each proposed and existing street within and adjacent to the development:
a. Name
b. Right-of-way width
c. Improved width of street, typically street centerline to back-of-curb dimensions
d. Tract " " for private streets

[ ] All existing and proposed waterlines and fire hydrants shall be shown

[ ] All existing and proposed overhead and underground utilities shall be shown

[ ] Locate proposed trees at least 20' from a proposed street light pole location

[ ] There should be a minimum six (6') feet of clearance between streetlight poles and fire hydrants, city water facilities, or city sewer facilities. Provide dimensional ties to fire hydrants where potential conflicts may occur (within 10' of street light pole)

[ ] All proposed and existing street lights within 300' from the first proposed streetlight should be shown with stationing and dimensional ties to the street centerline

[ ] Proposed streetlights in residential areas should be located within 5' of property lines. Lights located in residential areas but not adjacent to homes may be shown by station and offset only

[ ] Show all project phasing on the plans

[ ] Provide a quantity tabulation of the number of streetlight poles on the cover sheet

[ ] Identify utility provider on the plan set

[ ] Provide a legend on the plans identifying the following items:
a. Luminaire description

1. Local street – 100 watt, 9,500 lumen, high pressure sodium
2. Collector street – 150 watt, 16,000 lumen, high pressure sodium
3. Arterial street – 250 watt, 30,000 lumen, high pressure sodium

b. Luminaire mounting height

c. Pull Box size and type

d. Existing luminaire type, pole, and wattage

e. Traffic Signal Mounted Luminaire type, pole, and wattage

[ ] Coordinate streetlight plan with the engineer preparing other offsite improvement plans

[ ] Provide stations at all intersections

[ ] Utility provider must be shown with all applicable utility notes

[ ] Label specific locations, sizes, and dimension from center line and/or monument line along with the following:

a. Existing and proposed underground utilities

b. Existing and proposed overhead utilities

c. Face of curb

d. Width of sidewalk

e. Width on any PUE

f. Edge of right-of-way

g. Edge of pavement

[ ] Quantities must be tabulated separately by phase. Private streetlights must be tabulated separately from public streetlights.

[ ] Street light General Notes must be shown

[ ] On residential, collector and arterial streets, all existing and/or proposed driveways and American Disability Act (ADA) ramps shall be shown on the streetlight plans

Appendix F
Right-of-Way Acquisition Area Calculation Form

(Form Not Needed)

Project Name: _____

Project Description: _____

_____

County Assessor Parcel No.: _____

Unit, Lot, and Block: _____

Street Address: _____

Area Calculation Table						
Type of Acquisition	Area of Existing Parcel		Area to be Acquired		Area Remaining	
	Sq. Ft.	Acres	Sq. Ft.	Acres	Sq. Ft.	Acres
Existing Parcel						
Fee R/W						
Slope Easement						
Drainage Easement						
Temporary Construction Easement						

Vicinity Map

Appendix G
CAD File Layering Conventions
Public Works Department

(FORM NOT NEEDED)

Layer Name	Layer Description
0	
C-BLDG	Building
C-BLDG-TEXT	Building Text
C-BRDG	Bridge
C-BRDG-DECK	Bridge Deck
C-BRDG-EXST	Existing Bridge
C-BRDG-SECT	Cross Section Of Bridge
C-ONECALL	One Call Symbol
C-CURB	Curb, Gutter, Sidewalk
C-CURB-DW	Driveway
C-CURB-DW-EXST	Existing Driveway
C-CURB-EXST	Existing Curb, Gutter, Sidewalk
C-ESMT	Easement Lines
C-ESMT-CNTR	Easement Centerlines
C-ESMT-CNTR-DIMS	Easement Centerline Bearing, Distant & Curve Dimensions
C-ESMT-DIMS	Easement Line Bearing, Distant & Curve Dimensions
C-ESMT-TEMP	Temporary Easement
C-ESMT-TYPE	Easement Type Callouts
C-ESMT-WDTH	Easement Width Dimensions
C-FIRE-FHYD-SYM	Water Fire Hydrant Symbol
C-FIRE-UNDR-MAIN	Watermain to Fire Hydrant
C-FIRE-UNDR-MAIN-FLIN	Watermain - Fireline
C-FIRE-VALV-PNT	Fire Hydrant Water Valve Point
C-FIRE-VALV-SYM	Fire Hydrant Water Valve Symbol
C-GOVT-CNTY-BNDY	County Line
C-GOVT-CTLM-BNDY	City Limits
C-GOVT-DIST-BNDY	Council Districts
C-GOVT-PRCT-BNDY	Voting Precinct
C-LOGO	City Logo
C-MISC-CHRT	Miscellaneous Chart
C-MISC-CURB	Miscellaneous Curb
C-MISC-DETL	Miscellaneous Detail
C-MISC-DETL-CNTR	

C-MISC-DETL-HIDN	
C-MISC-DIMS	Dimensions
C-MISC-TEXT	Miscellaneous Text
C-PATT-DECO-PVMT	Hatch - Decorative Pavement
C-PATT-DECO-XSEC	Hatch- Decorative - Cross Section
C-PATT-DET	Hatch - Decorative - Detail Sheets
C-PATT-DW	Hatch - Proposed Driveway
C-PATT-PVMT	Hatch - Proposed Pavement
C-PATT-SW	Hatch - Proposed Sidewalk
C-PATT-SW-EXST	Hatch - Existing Sidewalk
C-PROF	Proposed Profile
C-PROF-CNTR	Proposed Profile Centerline
C-PROF-DOTS	Profile - Dots
C-PROF-GRID	Profile - Grid
C-PROF-GRND-EXST	
C-PROF-NOTES	Profile Notes
C-PROF-NOTES-HORZ	Profile Notes - Horizontal
C-PROF-NOTES-VERT	Profile Notes - Vertical
C-PROF-TEXT	Proposed Profile Text
C-PROP	A`Property Lines (Parcel Boundaries)
C-PROP-ACRE	Lot & Tract Acreages
C-PROP-ADDR	Street Addresses
C-PROP-BLDG-SBAC	Building Setback
C-PROP-DIMS	Property Line Bearing, Distant & Curve Dimensions
C-PROP-EXST	Old/Existing Property Lines
C-PROP-MON	Property Line Monuments
C-PROP-NUMB	Lot Numbers & Tracts
C-PROP-NUMB-DISP	County Parcel Numbers for display purposes only
C-PROP-SPLT	Property Split Lines
C-PVMT-EDGE	Edge Of Pavement
C-PVMT-EDGE-EXST	Existing-Edge Of Pavement
C-PVMT-SC	Saw Cut Line
C-RCLM-ANNO-TXT	Reclaim Text
C-RCLM-BOOS-PNT	Reclaim Booster Station Point
C-RCLM-BOOS-SYM	Reclaim Booster Station Symbol
C-RCLM-PRVL-PNT	Reclaim Pressure Relief Valve Point
C-RCLM-PRVL-SYM	Reclaim Pressure Relief Valve Symbol
C-RCLM-STOR-PNT	Reclaim Storage Point
C-RCLM-STOR-SYM	Reclaim Storage Symbol
C-RCLM-UNDR-FIT	Reclaim Fittings

C-RCLM-UNDR-MAIN	
C-RCLM-UNDR-MAIN	Reclaim Water Main - Standard
C-RCLM-UNDR-REDR-P	
C-RCLM-UNDR-REDR-PNT	Reclaimline Reducer Point
C-RCLM-UNDR-REDR-S	
C-RCLM-UNDR-REDR-SYM	Reclaim Reducer Symbol
C-RCLM-UNDR-SERV	Reclaim Service Tap
C-RCLM-VAL-PNT	Reclaim Water Valve Point
C-RCLM-VALV-SYM	Reclaim Water Valve Symbol
C-RIV-CNTR	Rivers/Creeks/Streams/Washes Center Lines
C-RIV-EDGE	Rivers/Creeks/Streams/Washes Edge Lines
C-RIV-NAME	Rivers/Creeks/Streams/Washes Names
C-ROW	Street Right-of-Way Lines
C-ROWC	Canal Right-of-Way Lines
C-ROWC-CNTR	Canal Right-of-Way Centerlines
C-ROWC-CNTR-DIMS	Canal Centerline Bearing, Distant & Curve Dimensions
C-ROWC-CNTR-MON	Canal Centerline Monuments
C-ROWC-CNTR-NAME	Canal Names
C-ROWC-CNTR-WDTH	Canal Right-of-Way Width Dimensions
C-ROWC-DIMS	Canal Right-of-Way Line Bearing, Distant & Curve Data
C-ROWC-MON	Canal Right-of-Way Monuments
C-ROW-CNST-CNTR	Construction Center Line
C-ROW-CNTR	Street Right-of-Way Centerlines
C-ROW-CNTR-DIMS	Street Centerline Bearing, Distant & Curve Dimensions
C-ROW-CNTR-MON	Street Centerline Monuments
C-ROW-CNTR-NAME	Street Names
C-ROW-CNTR-WDTH	Street Right-of-Way Width Dimensions
C-ROW-DIMS	Street Right-of-Way Line Bearing, Distant & Curve
C-ROW-EXST	Existing-Street Right-of-Way Lines
C-ROWF	Freeway Right-of-Way Lines
C-ROWF-CNTR	Freeway Right-of-Way Centerlines
C-ROWF-CNTR-DIMS	Freeway Centerline Bearing, Distant & Curve Dimensions
C-ROWF-CNTR-MON	Freeway Centerline Monuments
C-ROWF-CNTR-NAME	Freeway Names
C-ROWF-CNTR-WDTH	Freeway Right-of-Way Width Dimensions
C-ROWF-DIMS	Freeway Right-of-Way Line Bearing, Distant & Curve Data
C-ROWF-MON	Freeway Right-of-Way Monuments
C-ROW-MON	Street Right-of-Way Monuments
C-ROWP	Private Street Right-of-Way Lines
C-ROWP-CNTR	Private Street Right-of-Way Centerlines

C-ROWP-CNTR-DIMS	Private Street Centerline Bearing, Distant & Curve Data
C-ROWP-CNTR-MON	Private Street Centerline Monuments
C-ROWP-CNTR-NAME	Private Street Names
C-ROWP-CNTR-WDTH	Private Street Right-of-Way Width Dimensions
C-ROWP-DIMS	Private Street Right-of-Way Line Bearing, Distant & Curve Data
C-ROWP-MON	Private Street Right-of-Way Monuments
C-ROWR	Railroad Right-of-Way Lines
C-ROWR-CNTR	Railroad Right-of-Way Centerlines
C-ROWR-CNTR-DIMS	Railroad Centerline Bearing, Distant & Curve Dimensions
C-ROWR-CNTR-MON	Railroad Centerline Monuments
C-ROWR-CNTR-NAME	Railroad Names
C-ROWR-CNTR-WDTH	Railroad Right-of-Way Width Dimensions
C-ROWR-DIMS	Railroad Right-of-Way Line Bearing, Distant & Curve Data
C-ROWR-MON	Railroad Right-of-Way Monuments
C-SECT-COR-MON	Section Corner Monuments
C-SECT-COR-TEXT	Section & Quarter Corner Information
C-SECT-LINE	Section Lines
C-SECT-LINE-DIMS	Section Line Bearing & Distant Dimensions
C-SHBD	Sheet Border
C-SHBD-MTCH	Match Line
C-SHBD-MTCH-TEXT	Match Line Text
C-SHBD-TEXT	General Text
C-SHBD-TEXT-BLD	Bold Size Text
C-SHBD-TEXT-MED	Medium Size Text
C-SHBD-TTLB Title	Title Block & North Arrow
C-SHBD-TTLB-TEXT	Title Block Text
C-SSWR-ANNO-TXT	Sewer Text
C-SSWR-CLNO-PNT	Cleanout Point
C-SSWR-CLNO-SYM	Cleanout Symbol
C-SSWR-HEAD-PNT	Sewer Headwork Point
C-SSWR-HEAD-SYM	Sewer Headwork Symbol
C-SSWR-LSTA-PNT	Sewer Lift Station Point
C-SSWR-LSTA-SYM	Sewer Lift Station Symbol
C-SSWR-MAHN-PNT	
C-SSWR-MAH-SYM	
C-SSWR-MANH-PNT	Manhole Point
C-SSWR-MANH-SYML	Manhole Symbol
C-SSWR-MSTA-PNT	Sewer Metering Station Point
C-SSWR-MSTA-SYM	Sewer Metering Station Symbol
C-SSWR-UNDR-MAIN-STAN	Sewermain - Standard

C-SSWR-UNDR-SERV	Sewer Service
C-SSWR-VALV-PNT	Sewer Valve Point
C-SSWR-VALV-SYM	Sewer Valve Symbol
C-SSWR-WEIR-SYM	Sewer Weir Box Symbol
C-SSWR-WIER-PNT	Sewer Weir Box Point
C-SSWR-WIER-SYM	
C-STRM-AREA-CTCH	Catchment Area, Area that Flows to an Outfall
C-STRM-AREA-DET	Detention Area
C-STRM-AREA-STOR	Storage Pond
C-STRM-CB	Catch Basin
C-STRM-MNMD-CANL	Canal, Large Water Conveyance that Interacts w/Storm Drains
C-STRM-MNMD-CHAN	Channel, Concrete Lined Conveyance
C-STRM-MNMD-CNTR	Centerline, Carries the Attributes for the Items Listed Above
C-STRM-MNMD-DTCH	Ditch, Unlined Conveyance
C-STRM-MNMD-IRRG	Irrigation, Small Water Conveyance that Interacts
C-STRM-MNMD-SPWY	Spillway, Allows Surface Flow to Channels/Ditches
C-STRM-NTRL-CNTR	Centerline, Carries the Attributes for the Items Listed Above
C-STRM-NTRL-CREK	Creek
C-STRM-NTRL-RIV	River
C-STRM-NTRL-WASH	Wash
C-STRM-STRC-DIVR	Diversion Structure, Diverts Canal Water to Storm Drain System
C-STRM-STRC-FLGT	Flapgate, Restricts Flow to one Direction
C-STRM-STRC-HDWL	Headwall, Transition from Openflow to Pipe & Visa Versa
C-STRM-STRC-INLT	Inlet, Collects Surface Flow
C-STRM-STRC-JBOX	Junction Box Irrigation Control
C-STRM-STRC-MH	Manhole, Point of Entry to the Storm Drain System
C-STRM-STRC-ORFC	Orifice, Restricts Flow
C-STRM-STRC-OUTF	Outfall, Structures that Release Storm Water to Receiving Water
C-STRM-STRC-PMP	Pump, Moves Water Between Different Elements of the System
C-STRM-STRC-STAN	Stand Pipe, Irrigation Device
C-STRM-STRC-STAN-EXST	
C-STRM-STRC-VAL	Valve, Controls Rate or Direction of Flow
C-STRM-STRC-WIER	Weir, Restricts or Changes Direction of Flow
C-STRM-UNDR	Storm Drain Lines-Underground
C-STRM-UNDR-BDET	Bleed Off, Detention, Flow from Detention Area to Pipe System
C-STRM-UNDR-BPMP	Bleed Off, Pump, Flow from Pump to Pipe Systems
C-STRM-UNDR-CLVT	Culvert, Structure to Allow Flow Under Roads, etc.
C-STRM-UNDR-CONR	Connector, Pipe Connects Inlets to Majors/Laterals
C-STRM-UNDR-EXST	Existing-Storm Drain Lines-Underground
C-STRM-UNDR-IRRG	Irrigation, Part of Irrigation System that Interacts w/Storm Drain

C-STRM-UNDR-LATR	Lateral, Pipe Usually Smaller, Feeds to Majors
C-STRM-UNDR-MAJR	Major, Pipe Backbone, Ends at Outfall
C-STRM-UNDR-OTHR	Other
C-STRM-UNDR-SPHN	Siphon, Allows Flow Under Obstructions
C-SUB-BND	Subdivision Boundary
C-SUB-BND-DIMS	Subdivision Boundary Bearing, Distant & Curve Dimensions
C-SUB-BND-MON	Subdivision Boundary Monuments
C-SUB-NAME	Subdivision Name
C-SWR	Sanitary Sewer-At Grade
C-SWR-EXST	Existing-Sanitary Sewer-At Grade
C-SWR-UNDR	Sanitary Sewer Lines-Underground
C-SWR-UNDR-EXST	Existing-Sanitary Sewer
C-TOPO	Results Of Survey
C-TOPO-BORE	Bore Hole Locations
C-TOPO-FENC	Fence
C-TOPO-FENC-EXST	
C-TOPO-MISC	Miscellaneous Items
C-TOPO-MISC-EXST	
C-TOPO-RTWL	Retaining Wall
C-TOPO-STLT-EXST	Streetlight Pole - Existing
C-TOPO-TEXT	Topo Text
C-TOPO-TRAF-POLE-EXST	Existing Traffic Signal Pole
C-TOPO-WALL	Freestanding Wall
C-TRAF-EQPT	Traffic Signal Equipment
C-TRAF-EQPT-EXST	Existing-Traffic Signal Equipment
C-TRAF-EQPT-MISC	Traffic Signal Equipment-Miscellaneous
C-TRAF-EQPT-TEXT	Traffic Signal Equipment Notes/Text
C-TRAF-FNDN-COND	Traffic Signal Conduit
C-TRAF-FNDN-COND-EXST	Existing-Traffic Signal Conduit
C-TRAF-FNDN-JB	Traffic Signal Junction Boxes
C-TRAF-FNDN-JB-EXS	
C-TRAF-FNDN-JB-EXST	Existing-Traffic Signal Junction Boxes
C-TRAF-FNDN-MISC	Traffic Signal Foundation-Miscellaneous
C-TRAF-FNDN-TEXT	Traffic Signal Foundation Notes/Text
C-TRAF-MISC	Street Names / Miscellaneous Text
C-TRAF-PM-SKW	Traffic-Skip White Paint
C-TRAF-PM-SKW-EXST	Existing-Traffic-Skip White Paint
C-TRAF-PM-SKY	Traffic-Skip Yellow Paint
C-TRAF-PM-SKY-EXST	EXST Existing-Traffic-Skip Yellow Paint
C-TRAF-PM-SOW	Traffic-Solid White Paint

C-TRAF-PM-SOW-EXST	Existing-Traffic-Solid White Paint
C-TRAF-PM-SOY	Traffic-Solid Yellow Paint
C-TRAF-PM-SOY-EXST	Existing-Traffic-Solid Yellow Paint
C-TRAF-POLE	Traffic Signal Poles/Foundations
C-TRAF-POLE-EXST	Existing-Traffic Signal Poles/Foundations
C-TRAF-POLE-EXST-R	
C-TRAF-POLE-EXST-RMVL	Existing-Traffic Signal Poles/Foundations-to be Removed
C-TRAF-SIGN	Traffic Signs
C-TRAF-SIGN-EXST	Existing Traffic Signs
C-TRAF-STLT	
C-UTIL-CABL	Cable-At Grade
C-UTIL-CABL-EXST	Existing-Cable-At Grade
C-UTIL-CABL-OVHD	Cable Lines-Overhead
C-UTIL-CABL-UNDR	Cable Lines-Underground
C-UTIL-CABL-UNDR-EXST	Existing-Cable Lines-Underground
C-UTIL-CWTR-UNDR	Chiller Water Lines-Underground
C-UTIL-CWTR-UNDR-EXST	Existing-Chiller Water Lines-Underground
C-UTIL-FIBR	Fiber Optic-At Grade
C-UTIL-FIBR-	Existing-Fiber Optic-At Grade
C-UTIL-FIBR-OVHD	Fiber Optic Lines-Overhead
C-UTIL-FIBR-OVHD-EXST	Existing-Fiber Optic Lines-Overhead
C-UTIL-FIBR-UNDR	Fiber Optic Lines-Underground
C-UTIL-FIBR-UNDR-	Existing-Fiber Optic Lines-Underground
C-UTIL-FUEL-UNDR	Liquid Fuel Lines-Underground
C-UTIL-FUEL-UNDR-EXST	Existing-Liquid Fuel Lines-Underground
C-UTIL-IRRG	Irrigation line w\Headwalls
C-UTIL-IRRG-ABVG	Irrigation Structures
C-UTIL-IRRG-ABVG-EXST	
C-UTIL-IRRG-EXST	Existing-Open Irrigation line w\Headwalls
C-UTIL-IRRG-UNDR	
C-UTIL-MGAS-UNDER	
C-UTIL-MGAS-UNDR	Medical Gas Lines-Underground
C-UTIL-MGAS-UNDR-EXST	Existing-Medical Gas Lines-Underground
C-UTIL-NGAS	Natural Gas-At Grade
C-UTIL-NGAS-EXST	Existing-Natural Gas-At Grade
C-UTIL-NGAS-UNDR	Natural Gas Lines-Underground
C-UTIL-NGAS-UNDR-	Existing-Natural Gas Lines-Underground
C-UTIL-POWR	Electrical Power-At Grade
C-UTIL-POWR-EXST	Existing-Electrical Power-At Grade
C-UTIL-POWR-EXST	Existing-Electrical Power-At Grade

C-UTIL-POWR-OVHD	Electrical Power Lines-Overhead
C-UTIL-POWR-OVHD-EXST	Existing-Electrical Power Lines-Overhead
C-UTIL-POWR-UNDR	Electrical Power Lines-Underground
C-UTIL-POWR-UNDR-EXST	Existing-Electrical Power Lines-Underground
C-UTIL-SSWR-UNDR-EXST	Existing-Sanitary Sewer Lines-Underground
C-UTIL-STRM-EXST	Existing-Storm Drain / All Structures and Facilities
C-UTIL-TELE-ABVG	Telephone - Aboveground
C-UTIL-TELE-UNDR	Telephone - Underground
C-UTIL-TELE-UNDR-EXST	
C-UTIL-WATR-UNDR-EXST	Existing-Domestic Water Lines-Underground
C-WALK	Walkways - Independent of Street
C-WALK-EXST	Existing-Walkways - Independent of Street
C-WATR	Domestic Water - At Grade
C-WATR-ANNO-TXT	Water Text
C-WATR-BOOS-PNT	Water Booster Station Point
C-WATR-BOOS-SYM	Water Booster Station Symbol
C-WATR-DET	Water Detail Sheet - Line Work
C-WATR-DET-CNTR	Water Detail Sheet - Center Line
C-WATR-DET-DASH	
C-WATR-DET-DDOT	
C-WATR-DET-HIDN	
C-WATR-EXST	Existing-Domestic Water - At Grade
C-WATR-MANH-PNT	Water Manhole Point
C-WATR-MANH-SYM	Water Manhole Symbol
C-WATR-MSTA-PNT	Water Metering Station Point
C-WATR-MSTA-SYM	Water Metering Station Symbol
C-WATR-PRVL-PNT	Water Pressure Relief Valve Point
C-WATR-PRVL-SYM	Water Pressure Relief Valve Symbol
C-WATR-PZON	Water Pressure Zone
C-WATR-REDR-PNT	Waterline Reducer Point
C-WATR-REDR-SYM	Waterline Reducer Symbol
C-WATR-STOR-PNT	Water Storage Point
C-WATR-STOR-SYM	Water Storage Symbol
C-WATR-UNDR	Domestic Water Lines-Underground
C-WATR-UNDR-EXST	Existing-Domestic Water Lines-Underground
C-WATR-UNDR-FIT	Water Fitting
C-WATR-UNDR-MAIN	Watermain
C-WATR-UNDR-SERV	Water Service
C-WATR-VALV-SYM	Water Valve Symbol
C-WATR-WELL-PNT	Water Well Point

C-WATR-WELL-SYM	Water Well Symbol
DEFPOINTS	
L-IRRG-EQPT	Valves, Meters, Etc.
L-IRRG-EQPT-DET	Irrigation Detail Sheet - line Work
L-IRRG-EQPT-DET-CN	
L-IRRG-EQPT-DET-CNTR	Irrigation Detail Sheet - Center Line
L-IRRG-LTRL	Irrigation - Lateral Line
L-IRRG-MAIN	Irrigation - Main Line
L-IRRG-MISC	Wire, Pull Box, Etc.
L-IRRG-PIPE	Irrigation Pipe
L-IRRG-PRIV	Private Irrigation
L-IRRG-SIZE	Irrigation Pipe Size
L-IRRG-SLEV	Irrigation Sleeves
L-IRRG-SYMB	Irrigation Tags
L-IRRG-TEXT	Annotations
L-IRRG-WATR	Irrigation with Water
L-PLNT	Plants
L-PLNT-BLDR	Site Boulders
L-PLNT-CACT	Desert Plants
L-PLNT-DEMO	Demolish / Removal
L-PLNT-EXST	Existing Plants
L-PLNT-FURN	Site Furniture
L-PLNT-HEAD	Landscape Headers
L-PLNT-SAVG	Plant Salvage
L-PLNT-SHRB	Plant - Shrub
L-PLNT-TEXT	Landscape Text
L-PLNT-TREE	Trees
Z-BLDG	Major Existing Building Outlines
Z-BLDG-DIMS	Major Building Dimensions
Z-BLDG-FUTR	Future Buildings and Additions
Z-SITE	Building Setback Lines
Z-SITE-DIMS	Building Dimensions
Z-SITE-DRVW	Driveways
Z-SITE-FENC	Fences/Walls
Z-ZONE	Existing Zoning Lines
Z-ZONE-DIMS	Zoning Dimensions
Z-ZONE-FUTR	Rezoning Proposals
Z-ZONE-FUTR-TEXT	Rezoning Proposals Text
Z-ZONE-TEXT	Zoning Identification Text

*Any existing layer not listed should be named with the layer name and "-EXST"
EXAMPLE: C-BLDG-EXST

Appendix H
Sheet Naming Conventions
Public Works Department

COVER SHEET ..... (PROJECT #)CS
LEGEND & NOTE SHEET ..... (PROJECT #)LN
KEY MAP ..... (PROJECT #)KM (If not included on Cover Sheet)
ROADWAY SUMMARY SHEET ..... (PROJECT #)RS
TYPICAL SECTIONS ..... (PROJECT #)TY
PAVING PLANS ..... (PLAN/PROFILE) (PROJECT #)PP1 THRU (PROJECT #)PP?

IF PAVING PLANS HAVE SEPARATE PLAN AND PROFILE SHEETS:

PLAN SHEETS ..... (PROJECT #)PL1 THRU (PROJECT #)PL?
PROFILE SHEETS ..... (PROJECT #)PRO1 THRU (PROJECT #)PRO?

PAVING DETAILS ..... (PROJECT #)PD1 THRU (PROJECT #)PD?

STORM DRAIN QUANTITY SUMMARY SHEET ..... (PROJECT #)SDQ
HYDRAULIC GRADE LINE SHEET ..... (PROJECT #)HGL
STORM DRAIN DESIGN SUMMARY SHEET ..... (PROJECT #)SDS
SOIL BORING LOGS ..... (PROJECT #)SB1 THRU (PROJECT #)SB?
STORM DRAIN PLANS ..... (PROJECT #)SD1 THRU (PROJECT #)SD?
CATCH BASIN CONNECTOR PIPE PROFILES ..... (PROJECT #)CPP1 THRU (PROJECT #)CPP?
STORM DRAIN DETAILS ..... (PROJECT #)SDD1 THRU (PROJECT #)SDD?

LANDSCAPE PLANS ..... (PROJECT #)LS1 THRU (PROJECT #)LS?
LANDSCAPE IRRIGATION PLANS ..... (PROJECT #)LSI1 THRU (PROJECT #)LSI?
LANDSCAPE DETAILS ..... (PROJECT #)LSD1 THRU (PROJECT #)LSD?

STREET LIGHT TRENCHING PLANS ..... (PROJECT #)SL1 THRU (PROJECT #)SL?
TRAFFIC SIGNAL PLANS ..... (PROJECT #)TS1 THRU (PROJECT #)TS?
TRAFFIC SIGNAL DETAILS ..... (PROJECT #)TSD1 THRU (PROJECT #)TSD?

BRIDGE PLANS ..... (PROJECT #)BR1 THRU (PROJECT #)BR?

WATERLINE PLANS ..... (PROJECT #)WP1 THRU (PROJECT #)WP?
WATERLINE PROFILES (If separate from Plans) ..... (PROJECT #)WPP1 THRU (PROJECT #)WPP?
WATERLINE TIE-IN DETAILS ..... (PROJECT #)WTD1 THRU (PROJECT #)WTD?
WATERLINE DETAILS ..... (PROJECT #)WD1 THRU (PROJECT #)WD?

SANITARY SEWER PLANS ..... (PROJECT #)SS1 THRU (PROJECT #)SS?
SANITARY SEWER DETAILS ..... (PROJECT #)SSD1 THRU (PROJECT #)SSD?

Note: (PROJECT #) = City Project Number

MEADOWLARK LANE
PEDESTRIAN PATH RECONSTRUCTION

CoRR PROJECT NUMBER: PW2081 NMDOT PROJECT NUMBER: C3193402

CITY OF RIO RANCHO
SANDOVAL COUNTY, NEW MEXICO

CONSTRUCTION PLANS

SHEET INDEX:

0-1	Cover Sheet
1-1	General Notes
2-1	Removals STA. 100+00 to STA. 108+68
2-2	Removals STA. 108+68 to STA. 116+51
2-3	Removals STA.116+51 to STA. 124+48
2-4	Removals STA. 124+48 to STA. 132+48
2-5	Removals STA. 132+48 to STA. to STA. 140+43
3-1	Install STA. 100+00 to STA. 108+68
3-2	Install STA. 108+68 to STA. 116+51
3-3	Install STA. 116+51 to STA. 124+48
3-4	Install STA. 124+48 to STA. 132+48
3-5	Install STA. 132+48 to STA. 140+43
3-6	Install STA. 140+43 to STA. 147+30
4-1	NMDOT Curb Ramp Sheet
4-2	NMDOT Detectable Warning Surface Sheet
4-3	Drainage Sidewalk Culvert Sheet

VINCINTY MAP

CITY OF RIO RANCHO: _____ DEPARTMENT OF PUBLIC WORKS ENGINEERING DIVISION

DATE: 4/24/2020

City of Rio Rancho

NO.	DESCRIPTION	DATE	BY
1			
2			
3			
4			
5			
6			
7			

REVISIONS (OR CHANGE NOTICES)

PUBLIC WORKS DEPARTMENT
ENGINEER DIVISION

COVER SHEET

PW2081 MEADOWLARK LANE
PEDESTRIAN PATH RECONSTRUCTION

PROJECT NO.
DESIGNED BY:
DRAWN BY:
CHECKED BY:
DATE:
DPI CHK:

SHEET: 0-1

GENERAL NOTES

1. All construction shall be performed in accordance with 1) the project construction plans, 2) the project specifications, 3) the current edition of the City of Rio Rancho standard details, 4) the current edition of the NMDOT Standard Specifications for Highway and Bridge Construction, and 5) the New Mexico Standard Specifications for Public Works Construction and details, as prepared by the New Mexico Chapter, American Public Works Association and addendum. In the case of conflicting specifications, the City of Rio Rancho will determine which specification governs.

2. The Contractor agrees to assume the sole and complete responsibility for the job site conditions during the course of construction of the project, including safety of all persons and property. This requirement shall apply continuously and not be limited to normal working hours, and the Contractor shall defend, indemnify and hold the City and Engineer harmless from any and all liability, real or alleged, in connection with the performance of the work on this project, except for liability arising from the sole negligence of the City or Engineer.

3. No modifications to these plans shall be made without the written consent of the City, Engineer, and all approval signatories. The Engineer shall not be responsible for construction methods or techniques or for the prosecution of the work as shown on these plans. The Engineer shall not be held responsible for the acts or omissions of the Contractor, Subcontractors, or other persons performing any work, as shown in the project Contract Documents.

4. A Right-of-Way Use Permit and Traffic Control Plan (TCP) are required for all work performed within the public Right-of-Way. Provisions contained within Chapter 96 of the City of Rio Rancho Municipal Code shall govern. All construction signing, barricading, and channelization devices shall conform to the latest edition of the Manual on Uniform Traffic Control Devices (MUTCD). The Contractor is responsible for the setup and maintenance of all traffic control devices. Any modifications to the approved traffic control plan must by approved by the City prior to any changes being implemented. A Traffic Control Supervisor must be available for the duration of the project 24 hours a day and seven days a week. Access to residents and businesses must be maintained at all times.

5. The Contractor shall designate at least one emergency contact person, and shall provide telephone numbers where this person can be contacted at any time. This information shall be provided to the City's Project Manager.

6. The Contractor is responsible for obtaining all necessary permits from all jurisdictional authorities before the start of construction.

7. All work on this project shall be performed in accordance with applicable federal, state, and local laws, rules and regulations concerning construction safety, health, and environmental protection.

8. Existing site improvements which are damaged or displaced by the Contractor shall be removed and replaced by the Contractor at the Contractor's own expense. The work shall be approved by the City before construction of the repairs. Repairs must be accepted by the City before final payment.

9. The Contractor shall only utilize the designated staging areas for storage of all equipment and materials. The City assumes no responsibility or liability for the Contractor's equipment and material in the staging area. Security shall be the sole responsibility of the Contractor. If no staging area is designated on these plans, an offsite staging area shall be provided by the Contractor at the Contractor's expense, or the Contractor may negotiate with the City to use an onsite area.

10. Unless otherwise noted, all roadway stationing is along the centerline of the roadway right-of-way.

11. Unless otherwise noted, stationing of channels and/or pipes in drainage easements is along the centerline of the channel/pipe.

12. The Contractor shall be responsible for determining, in advance of their construction operations, if overhead utility lines, support structures, poles, guys, etc., are an obstruction to construction operations. If any obstruction is evident, the Contractor shall be responsible for coordinating with the appropriate utility owner to remove or support the utility obstruction. All costs for these requirements are incidental to the Contract.

13. Facilities which are not specifically located with actual vertical and horizontal controls on the construction documents, are shown approximate and in accordance with the best available information provided by various owners of the facilities, and supplemented by visual surface information where appropriate. Accuracy, location, and completeness of this information is the sole responsibility of the Contractor and should be verified, by any means necessary, before the initiation of construction. Should a conflict exist, the Contractor shall notify the City, Engineer, and the City's Project Manager immediately.

14. It is mandatory that a preconstruction meeting be held before commencing construction. The Contractor is responsible for contacting the City's Project Manager to determine the time and location of the preconstruction meeting.

15. At the preconstruction meeting, the Contractor shall submit a detailed construction schedule to the City's Project Manager. The schedule will be updated on a monthly basis and submitted with the monthly invoice.

16. Any work performed without the approval of the City of Rio Rancho and/or all work and materials not in conformance with the specifications is subject to removal and replacement at the Contractor's expense.

17. The Contractor shall contact NM 811 at 1-800-321-2537 for utility spots in accordance with applicable state law.

18. The Contractor shall confine their work to within the construction limits and/or public right-of-way to preserve existing vegetation, landscaping, and private property. Approval of these plans does not give or imply any permission to trespass or work on private property. Permission must be granted in writing by the Owner of that property.

19. It is the sole responsibility of the Contractor to keep the job site free from trash on a daily basis, and all materials will be neatly organized. Trash and/or non-used materials shall not be buried onsite.

20. The Contractor shall park equipment and vehicles so as not to interfere with normal activities of residents, other Contractors, or Emergency Services.

21. The Contractor will provide construction staking utilizing approved construction plans, the appropriate Right-of-Way maps, recorded plats, and City of Rio Rancho standard details. Each revision to the plans shall be recorded in the plan revision block. Plans shall include a location map with legal description(s) and location grid.

22. The Contractor shall maintain an up-to-date and accurate set of Working Record Drawings, redlined drawings, in accordance with the City or Rio Rancho's Development Process Manual (DPM) Chapter II.7. These Working Record Drawings shall reflect all approved changes to the original plans throughout the construction process. At the completion of construction, the Contractor shall submit the Working Record Drawings as outlined in the City or Rio Rancho's DPM Chapter II.7. Also, the Contractor shall ensure that all submittals, permitting, and construction activities are in accordance with the City or Rio Rancho's DPM and applicable ordinances. All costs for these requirements are incidental to the Contract.

23. No work shall be performed in a floodplain without written authorization from the City's Floodplain Manager.

24. Any work performed in a drainage way, channel, arroyo, or floodplain must be protected by the means identified in the Temporary Erosion Control and Sediment plans accepted by the City.

25. Vibration monitoring will be at the Contractor's discretion and incidental to the Contract.

SOILS

1. Unless otherwise specified subgrade soils and structural fill materials shall be compacted to the following percentages of the ASTM D-1557 maximum density.

MATERIALS	PERCENT (%) COMPACTION
STRUCTURAL FILL IN THE BUILDING AREA	95
SUB BASE FOR SLAB SUPPORT	95
MISCELLANEOUS BACKFILL BELOW STRUCTURAL FILL OR ROAD	95
MISCELLANEOUS BACKFILL BELOW UNPAVED, NON-BUILDING AREAS	90
ROAD SUB GRADE	95
SIDEWALK SUB GRADE	95
CURB AND GUTTER SUBGRADE	95
ARROYOS	90

ROADWAY GENERAL NOTES

1. No paving construction activities shall be started until all underground utilities within the roadway are completed, tested, and approved. All water valve boxes and electrical, telephone, television, and sewer manholes in the construction area shall be adjusted to finished grade.

2. All signs, barricades, channelization devices, pavement markings, sign frames and erection of such devices shall conform to the requirements of the "Manual on Uniform Traffic Control Devices for streets and highways" (MUTCD), current edition.

3. All street striping altered or destroyed during construction shall be replaced by the Contractor to match the original conditions (i.e. type, spacing) at the location prior to construction, or as shown in this plan set.

4. Street grades shall be restored by the Contractor to the existing grades unless otherwise directed by the City of Rio Rancho. Smooth transitions shall be made between existing pavement which remains in place and pavement which is replaced. When abutting new pavement to existing, saw cut back existing pavement to a neat, straight line as required to remove any broken or cracked pavement. Refer to standard drawing PS-02.

5. The location of all valves and manholes must be referenced at all times by the Contractor during construction and made accessible daily upon completion of all paving activities.

EROSION CONTROL/ENVIRONMENTAL PROTECTION/STORM WATER POLLUTION PREVENTION PLAN

1. The Contractor shall be responsible for fulfilling all necessary National Pollutant Discharge Elimination System (NPDES) requirements including, but not limited to, obtaining an NPDES permit before construction, filing out the Notice of Intent (NOI) application, and filling out the Notice of Termination (NOT) application. The Contractor shall also be responsible for the implementation of and inspection reports for the Storm Water Pollution Prevention Plan (SWPPP). The Contractor shall submit the SWPPP with the proposed construction staging area and temporary sanitary facilities clearly shown. Any check dams, silt fences, or other Best Management Practices (BMP) that are required in the approved SWPPP shall be included in and are incidental to the SWPPP bid amount.

2. The Contractor is required to keep a current copy of the SWPPP at the construction site or at an easily accessible location so that it can be made available at the time of an onsite inspection or upon request by the EPA; a state, tribal, or local agency approving storm water management plans; the operator of a storm sewer system receiving discharges from the site; or representatives of the U.S. Fish and Wildlife Service (USFWS) or the National Marine Fisheries Service (NMFS).

3. The Contractor shall conform to all City, County, State and Federal dust and erosion control regulations. The Contractor shall prepare and obtain any necessary dust or erosion control permits from the regulatory agencies.

4. The Contractor shall either promptly remove any material excavated within the public Right-of-Way or install BMPs according to NPDES requirements to prevent discharge of excavated material within the public Right-of-Way during a rain or wind event. All costs for these requirements are incidental to the Contract.

5. The Contractor shall implement the approved SWPPP and ensure that no soil erodes from the site into public Right-of-Way or onto private property.

6. The Contractor shall mitigate erosion of temporary or permanent dirt swales by installing BMPs identified in the approved SWPPP in the swales perpendicular to the direction of flow, and at intervals as specified in the SWPPP.

7. Construction areas shall be watered for dust control in compliance with government ordinances. The Contractor shall be responsible for locating and supplying water as required. Watering, as required for construction and dust control, shall be considered incidental to construction and no measurement or payment shall be made therefore.

8. Any areas disturbed by construction and not covered by landscaping or an impervious surface shall be re-vegetated with native grass seeding. When construction activities cease and earth disturbing activities will not resume within 14 days, stabilization measures must be initiated. Unless indicated otherwise on these plans or on the landscaping plan, native grass seeding shall be in accordance with Section 1012 of the New Mexico Standard Specifications for Public Works Construction, APWA NM Chapter, current edition.

9. All waste products from the construction site, including items designated for removal, construction waste, construction equipment waste products (oil, gas, tires, etc.) garbage, grubbing, excess cut material, vegetative debris, etc. shall be appropriately disposed of offsite at no additional cost to the City. It shall be the Contractor's responsibility to obtain permits required to haul or dispose of waste products. It shall be the Contractor's responsibility to ensure that the waste disposal site complies with government regulations regarding the environment, endangered species, and archaeological resources.

10. The Contractor shall be responsible for the cleanup and reporting of spills of hazardous materials associated with the construction site. Hazardous materials include gasoline, diesel fuel, motor oil, solvents, chemicals, paints, etc. which may be a threat to the environment. The Contractor shall report the discovery of past or present spills to the New Mexico Environment Department Emergency Response Team at (505) 827-9329.

11. The Contractor shall comply with all applicable regulations concerning surface and underground water. Contact with surface water by construction equipment and personnel shall be minimized. Equipment maintenance and refueling operations shall be performed in an environmentally safe manner in compliance with government regulations.

12. Where storm inlets are susceptible to inflow of silt or debris from construction activities, protection shall be provided on their upstream side utilizing BMPs according to NPDES requirements. All costs for these requirements are incidental to the Contract.

13. Storm Water Pollution Prevention Plans (SWPPP) and accompanying Federal EPA Administrative Procedures shall meet the City of Rio Rancho guidelines and procedures outlined in the current addition of the New Mexico State Highway and Transportation Department Storm Water Management Guidelines for Construction and Industrial Activities Manual.

14. The Contractor shall provide adequate means for cleaning trucks and/or other equipment of mud before entering public streets. It is the Contractor's responsibility to clean streets and take whatever measures are necessary to ensure that all roads are maintained in a clean, mud and dust-free condition at all times.

15. No work may begin in a an arroyo or other drainage way until authorization has been provided by the U.S. Army Corp. of Engineers and the City of Rio Rancho Flood Plain Manager.

WATER GENERAL NOTES

1. For water connections to existing lines, the Contractor shall notify the City's Project Manager a minimum of 48 hours before the connection.

2. Compression joints may be used on copper service lines. Flared joints shall be used when connecting to plastic lines.

3. Valve boxes shall be brought to surface elevation upon completion of the surface course of pavement. Concrete collars shall be constructed to surface elevations.

4. Flushing of water lines shall be metered and reported to the City's Project Manager on a weekly basis. Preference for disposal is (1) on available land surface or (2) in storm sewers. Disposal methods shall be discussed with the City's Project Manager.

5. Flushing, disinfection and testing of water lines shall be coordinated with the City's Project Manager.

6. It will be the Contractor's sole responsibility to protect and maintain, in service, all existing utilities. The Contractor shall adequately support and protect existing utilities affected by the Contractor's trenching activity. In the event that existing utilities are damaged by the Contractor's operations, the Contractor shall arrange for and coordinate prompt repair by the respective utility and shall bear the cost of the repairs.

7. All water lines must have tracer wire and marker balls per City of Rio Rancho standard drawings.

8. The City of Rio Rancho shall approve material submittals before construction.

9. Before any water line installation, the following conditions will occur:

   a) The water line route will be cleared and grubbed and then graded to plan elevation

   b) The water line will be staked when outside an area with curb and gutter.

10. The City of Rio Rancho Utilities Operations Division shall be the only personnel authorized to operate existing valves, fire hydrants, etc. for construction purposes. All shutoffs must be coordinated with the City's Project Manager seven (7) days before proposed shutoff and shall comply with the accepted shutoff plan.

11. The Contractor is responsible for testing of all lines, including but not limited to, hydrostatic and bacteria testing, disinfecting, and flushing.The Contractor is responsible for the testing of the water line system before acceptance by the City. Testing shall be performed to demonstrate the functionality of the system. All costs for these requirements are incidental to the Contract.

12. For non-hot tap water connections to existing lines, the Contractor shall prepare and submit to the City's Project Manager, for acceptance, a water shutoff plan 48 hours before the connection is to take place.

13. The Contractor shall mark the top of the curb with a "W" for water lines following service installations and before final acceptance.

14. Potability testing shall be collected and delivered by a certified third party tester, approved by the City, to a testing laboratory certified by the New Mexico Environment Department - Drinking Water Bureau.

WASTEWATER GENERAL NOTES

1. Sewer/Water lines shall be placed in separate trenches at a distance of 15 feet typically or a minimum of 10 feet apart horizontally. The water line shall be placed a minimum of 1.5 feet higher in elevation than the sewer line. At all crossings of water and sewer lines, the water line shall be a minimum of 1.5 feet higher than the sewer line or the sewer line shall be C-900 pressurized pipe.

2. It will be the Contractor's sole responsibility to protect and maintain in service all existing utilities. The Contractor shall adequately support and protect existing utilities affected by the Contractor's trenching activity. In the event that existing utilities are damaged by the Contractor's operations, the Contractor shall arrange for and coordinate with the Project Manager, prompt repair by the respective utility and shall bear the cost of the repairs.

3. The City of Rio Rancho shall approve material submittals before construction

4. Prior to the sewer line installation, the following conditions will occur:

   a) The sewer line route will be cleared and grubbed and then graded to plan elevation

   b) The sewer line will be staked when outside an area with curb and gutter

5. All forcemain sewer lines must have marker balls per the City of Rio Rancho standard drawings. Tracer wire shall be installed if required by the City's Project Manager.

6. The City of Rio Rancho Utilities Operations Division shall be the only personnel authorized to operate existing valves, etc. for construction purposes. All shutoffs must be coordinated with the City's Project Manager seven (7) days before to proposed shutoff and shall comply with the accepted shutoff plan.

7. 30 days following installation and backfill of sewer lines, a deflection test using a hand pulled mandrel shall be performed in the presence of the City's Inspector. All costs for these requirements are incidental to the Contract.

8. Air testing of sewer lines and hydrostatic testing of force mains shall be conducted in the presence of the City's Inspector. All costs for these requirements are incidental to the Contract.

9. All sewer service lines shall be inspected by TV camera and videoed then provided to the City's Inspector for review before acceptance by the City. In the event that the first inspection or subsequent inspections after that do not pass, the Contractor will be required to perform additional inspections of the sewer service lines using a TV camera at the Contractor's expense.

10. Manholes shall meet the City of Rio Rancho standards except that there shall be no ladder rungs installed.

11. The Contractor is responsible for testing of all force main lines, including but not limited to hydrostatic and bacteria testing, disinfecting, and flushing. All costs for these requirements are incidental to the Contract.

12. If bypass pumping is required, then a bypass pumping plan must be submitted to the City's Project Manager, for acceptance, seven (7) days before bypass pumping begins.

13. The Contractor shall mark the top of the curb and pan of the gutter with "S" for sanitary sewer following service installation and before final acceptance.

14. Manholes shall be raised to surface course of pavement. Circular concrete collars shall be constructed to surface elevation.

15. No bricks shall be used to adjust manholes to finished grade.

ADA GENERAL NOTES

1. These drawings provide guidance for compliance with the current public right of way accessibility guidelines (PROWAG). These standards shall apply to all new and altered sidewalks.

2. Surfaces shall be stable, firm, and slip resistant. Sidewalk and curb ramp surfaces shall provide consistent slopes within each section.

3. All street striping altered or destroyed during construction shall be replaced by the Contractor to All broom finishes shall be perpendicular to the direction of pedestrian travel.

4. A vertical change of 1/4 inch (6mm) or less is allowed. if between 1/4 inch and 1/2 inch (6mm and 13mm), then it needs to be beveled 2:1. Changes greater than 1/2 inch shall be ramped.

5. Openings or cracks in sidewalk surfaces shall not exceed 1/2 inch (13mm). Elongated openings should be placed so that the long dimension is perpendicular or diagonal to the dominant direction of travel.

6. The least possible curb ramp slope shall be used. Curb ramps running slope shall not exceed 12:1. Where existing terrain is steep, curb ramps shall not exceed 15 feet in length.

7. Provide a flush transition between curb ramps, sidewalks, gutter, and edge of pavement, free of drainage lip, abrupt grade changes, drop-offs, or any surface irregularities. A 5% (20:1) or flatter transition taper shall be provided from the street to the gutter for curb ramps locations (this may require special treatment of the edge of OGFC) when diagonal (not in line with crosswalks) curb ramps are necessary. A 2% (50:1) transition or "lower landing" shall be provided. The gutter running slope (flow line) shall not exceed 2% measured along the bottom of the curb ramp.

8. Curb ramps shall be located to provide the most direct route of travel across the traffic lanes.

9. Two directional (in line with the crosswalks) curb ramps per corner are used in order to provide short and direct crossings for the user.

10. Sign posts, utility poles, fire hydrants, traffic signals standards, light poles, pull boxes, meters, valves, etc., shall not be located in the curb ramp including side flares and landings.

11. In order to better accommodate conditions in the field, the contractor shall obtain final approval of curb ramp locations from the project manager and the city manager and the city traffic engineer. When necessitated by existing physical conditions. Alternate curb ramps must be submitted to the project manager for approval by the city traffic engineer.

12. Landings shall be a minimum of 48" x 48". Slopes shall not exceed 2% (50:1) in all directions.

13. Detectable warnings are required at all street intersections, signalized driveways, commercial driveways 30' wide or greater, and marked mid-block crosswalks.

14. Concrete Procedural note: Before scheduling delivery of concrete, contractor shall meet with City Inspector/PM to ensure the concrete formwork is constructed to dimensions and grades shown on plans and meets PROWAG, 2011 Technical Design Criteria. Calibrate 24" electronic digital level with Contractor's electronic digital level prior to verifying measurements. Verify measurements meet requirements or require correction of all discrepancies before scheduling of concrete to ensure the finished concrete will meet PROWAG, When all measurements meet requirements then the Inspector shall permit concrete pour. Repeat the procedure after concrete pour to ensure the curb ramp meets PROWAG compliance. Final acceptance of a curb ramp does not occur until the final inspection of the project. This procedure shall be considered incidental to the installation of the ADA curb ramps.

15. The contractor shall submit a proposed work plan for pedestrian improvements to the project engineer for review and approval prior to initiating this work. This plan shall include the method proposed to maintain pedestrian access to businesses, schools, hospitals, buildings, etc. throughout the pedestrian improvements construction in particular. The contractor, at minimum, shall maintain a 48" clear path for pedestrians so as to meet ADA accessibility requirements. All temporary pedestrian facilities implemented during construction shall comply with ADA standards.

16. Sidewalk and curb ramp cross slope is recommended to be constructed for a cross slope of 1.5% typical, but shall not exceed 2.0% cross slope on the pedestrian access route.

No.	DESCRIPTION	DATE	BY
1			
2			
3			
4			
5			
6			
7			

REVISIONS (OR CHANGE NOTICES)

Designed By:

Designed For: CITY OF RIO RANCHO

PUBLIC WORKS GENERAL NOTES

RIO RANCHO, NEW MEXICO

PROJECT NO.	
DESIGNED BY:	
DRAWN BY:	BMP
CHECKED BY:	
DATE MODIFIED:	05/07/2019
DPW CHK:	

SHEET: 1 - 1

RioRancho City of Vision

PUBLIC WORKS DEPARTMENT
ENGINEERING DIVISION

BRIAN J. GOTTLIEB
NEW MEXICO
19980
4/24/2020
PROFESSIONAL ENGINEER

PW2081 MEADOWLARK LANE
PEDESTRIAN PATH RECONSTRUCTION

REMOVALS

SHEET
2 - 1

Key Notes:
[1] Remove and Dispose in accordance with CoRR Spec. #601.

RioRancho City of Vision

PUBLIC WORKS DEPARTMENT
ENGINEERING DIVISION

BRIAN J. GOTTLIEB
NEW MEXICO
19980
4/24/2020
PROFESSIONAL ENGINEER

PW2081 MEADOWLARK LANE
PEDESTRIAN PATH RECONSTRUCTION

REMOVALS

SHEET
2 - 2

RioRancho City of Vision

PUBLIC WORKS DEPARTMENT
ENGINEERING DIVISION

BRIAN J. GOTTLIEB
NEW MEXICO
19980
4/24/2020
PROFESSIONAL ENGINEER

PW2081 MEADOWLARK LANE
PEDESTRIAN PATH RECONSTRUCTION

REMOVALS

SHEET
2 - 3

RioRancho City of Vision

PUBLIC WORKS DEPARTMENT
ENGINEERING DIVISION

BRIAN J. GOTTLIEB
NEW MEXICO
19980
4/24/2020
PROFESSIONAL ENGINEER

PW2081 MEADOWLARK LANE
PEDESTRIAN PATH RECONSTRUCTION

REMOVALS

SHEET
2 - 4

Key Notes:
[1] Remove and Dispose in accordance with CoRR Spec. #601.

RioRancho City of Vision

PUBLIC WORKS DEPARTMENT
ENGINEERING DIVISION

BRIAN J. GOTTLIEB
NEW MEXICO
19980
4/24/2020
PROFESSIONAL ENGINEER

PW2081 MEADOWLARK LANE
PEDESTRIAN PATH RECONSTRUCTION

REMOVALS

SHEET
2 - 5

Key Notes:
[1] Install 12' wide concrete sidewalk per CoRR standard DWG.NO DW-01 on sheet 4-3.
[2] Install sealed expansion joint at 15 feet intervals. See Sealed Expansion Joint detail on this page.

RioRancho City of Vision

PUBLIC WORKS DEPARTMENT
ENGINEERING DIVISION

BRIAN J. GOTTLIEB
NEW MEXICO
19980
4/24/2020
PROFESSIONAL ENGINEER

PW2081 MEADOWLARK LANE PEDESTRIAN PATH RECONSTRUCTION

INSTALL

SHEET 3 - 1

Key Notes:
[1] Install 12' wide concrete sidewalk per CoRR standard DWG.NO DW-01 on sheet 4-3.
[2] Install sealed expansion joint at 15 feet intervals. See Sealed Expansion Joint detail on this page.

RioRancho City of Vision

PUBLIC WORKS DEPARTMENT
ENGINEERING DIVISION

BRIAN J. GOTTLIEB
NEW MEXICO
19980
4/24/2020
PROFESSIONAL ENGINEER

PW2081 MEADOWLARK LANE
PEDESTRIAN PATH RECONSTRUCTION

INSTALL

SHEET
3 - 2

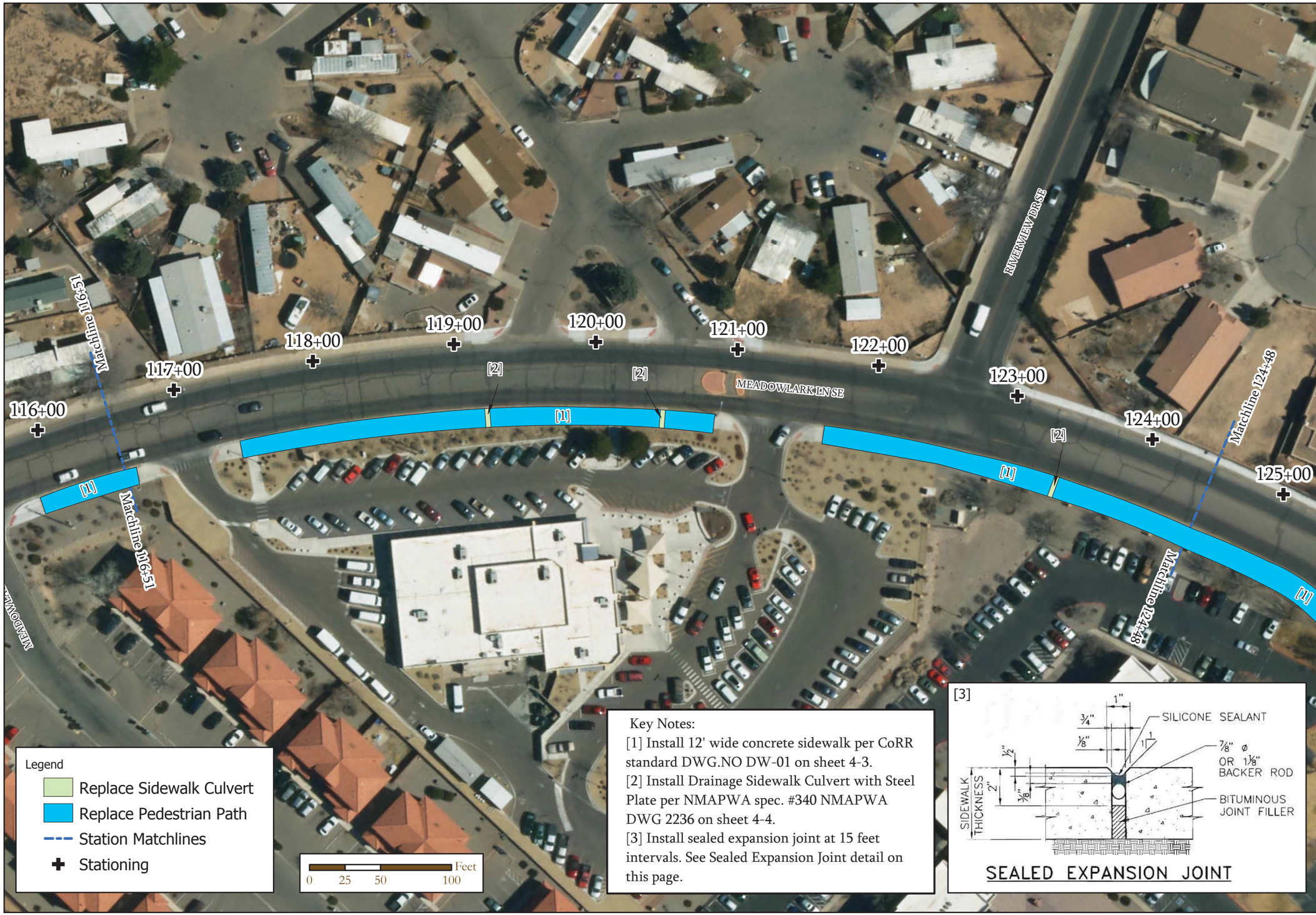

RioRancho City of Vision

PUBLIC WORKS DEPARTMENT
ENGINEERING DIVISION

BRIAN J. GOTTLIEB
NEW MEXICO
19980
4/24/2020
PROFESSIONAL ENGINEER

PW2081 MEADOWLARK LANE PEDESTRIAN PATH RECONSTRUCTION

INSTALL

SHEET
3 - 3

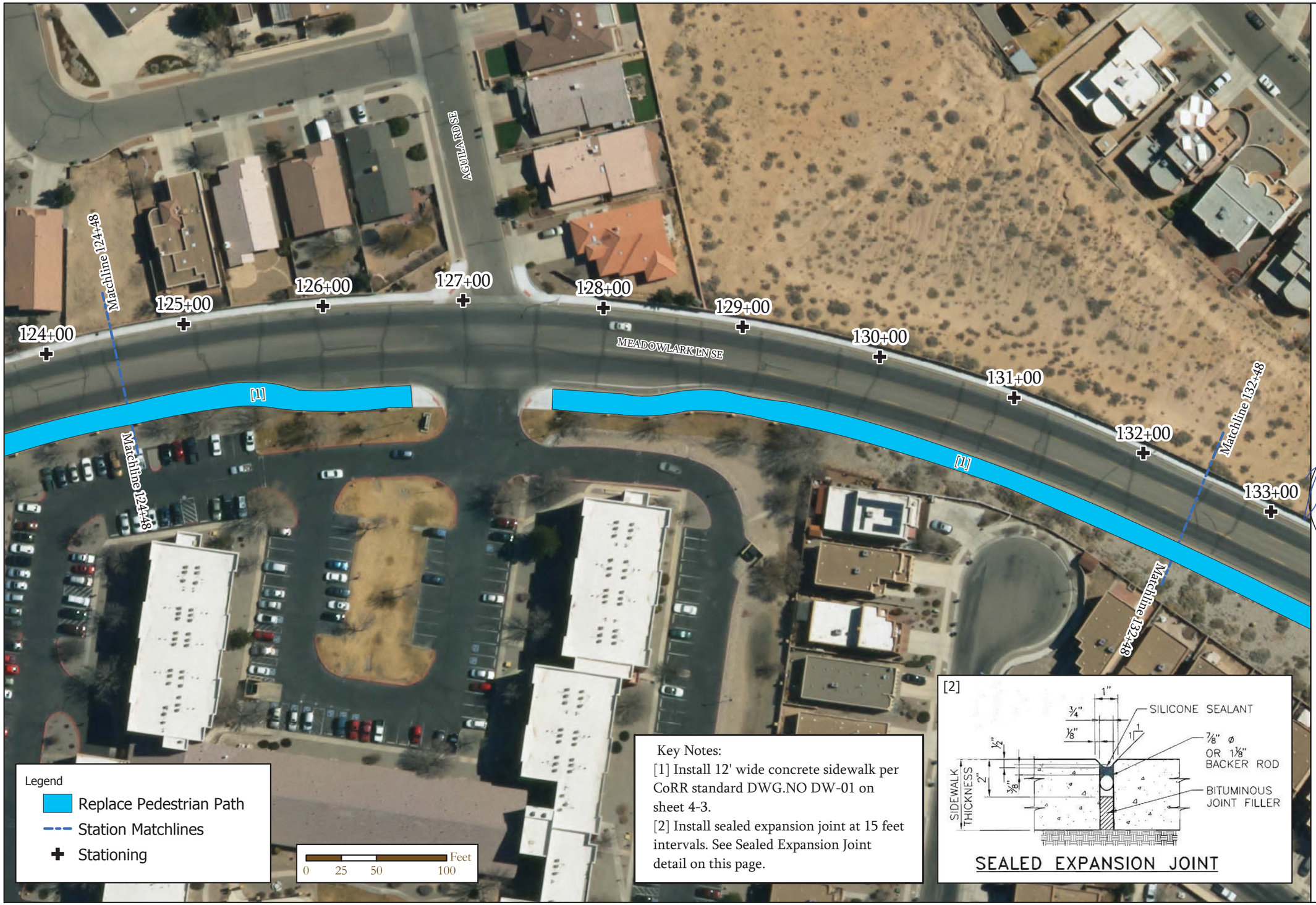

RioRancho City of Vision

PUBLIC WORKS DEPARTMENT
ENGINEERING DIVISION

BRIAN J. GOTTLIEB
NEW MEXICO
19980
4/24/2020
PROFESSIONAL ENGINEER

PW2081 MEADOWLARK LANE PEDESTRIAN PATH RECONSTRUCTION

INSTALL

SHEET 3 - 4

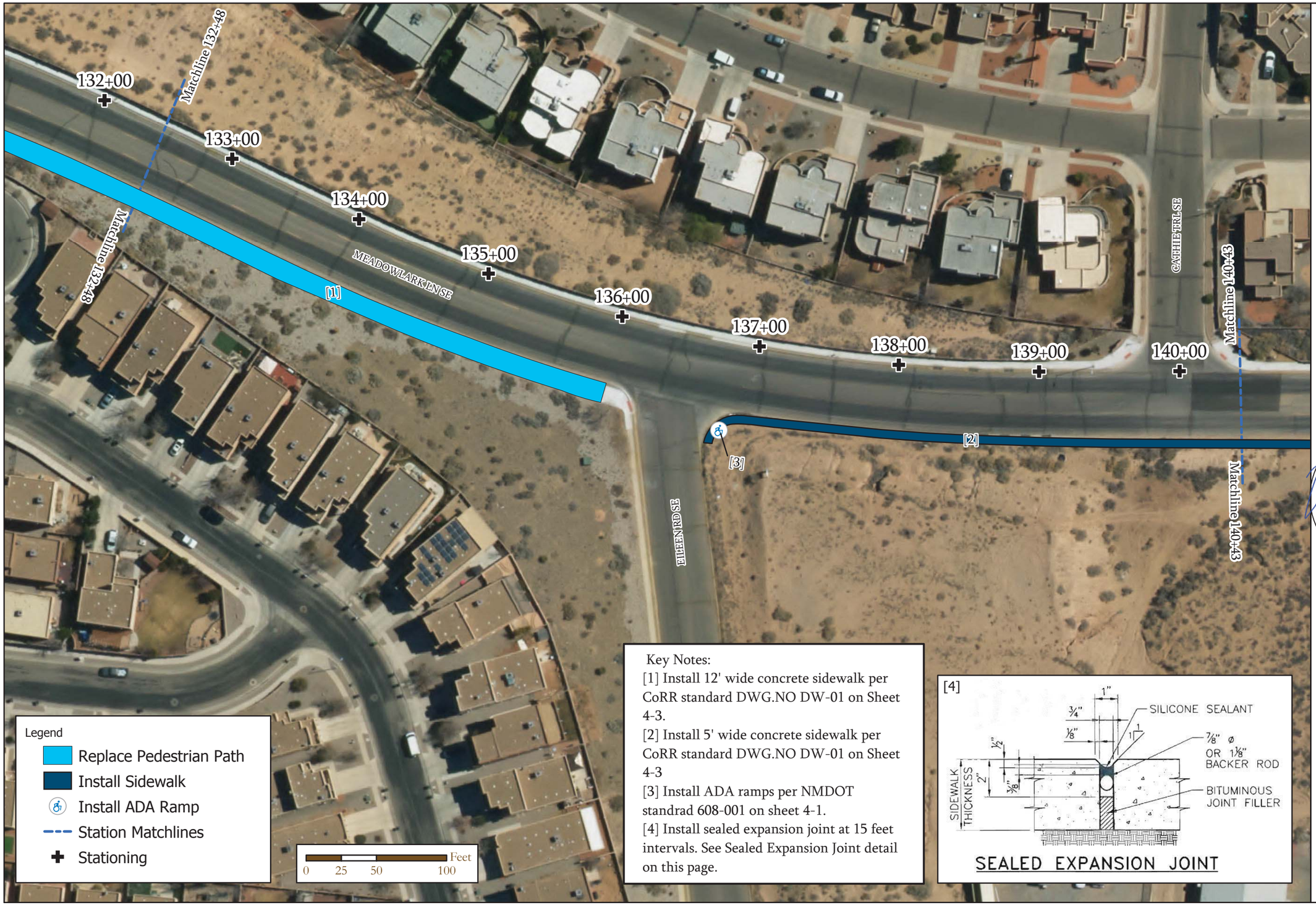

Key Notes:
[1] Install 12' wide concrete sidewalk per CoRR standard DWG.NO DW-01 on Sheet 4-3.
[2] Install 5' wide concrete sidewalk per CoRR standard DWG.NO DW-01 on Sheet 4-3
[3] Install ADA ramps per NMDOT standrad 608-001 on sheet 4-1.
[4] Install sealed expansion joint at 15 feet intervals. See Sealed Expansion Joint detail on this page.

[4]

SEALED EXPANSION JOINT

RioRancho City of Vision

PUBLIC WORKS DEPARTMENT
ENGINEERING DIVISION

BRIAN J. GOTTLIEB
NEW MEXICO
19980
4/24/2020
PROFESSIONAL ENGINEER

PW2081 MEADOWLARK LANE PEDESTRIAN PATH RECONSTRUCTION

INSTALL

SHEET
3 - 5

RioRancho City of Vision

PUBLIC WORKS DEPARTMENT
ENGINEERING DIVISION

BRIAN J. GOTTLIEB
NEW MEXICO
19980
4/24/2020
PROFESSIONAL ENGINEER

PW2081 MEADOWLARK LANE PEDESTRIAN PATH RECONSTRUCTION

INSTALL

SHEET 3 - 6

SUMMARY
FILENAME

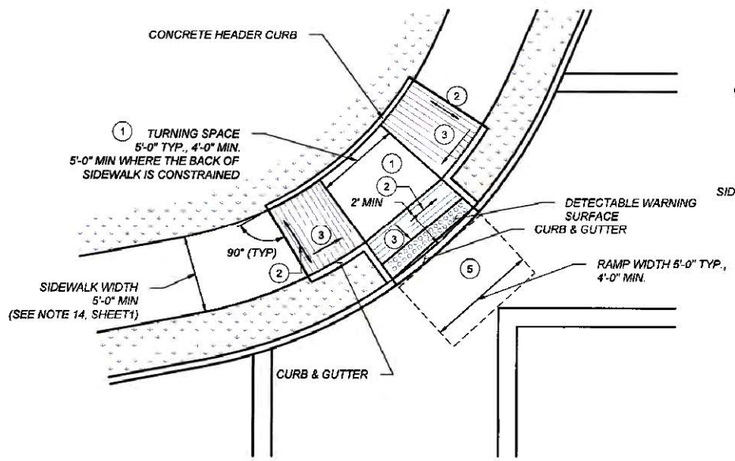

COMBINATION CURB RAMP (A)
DIAGONAL
SCALE: NONE

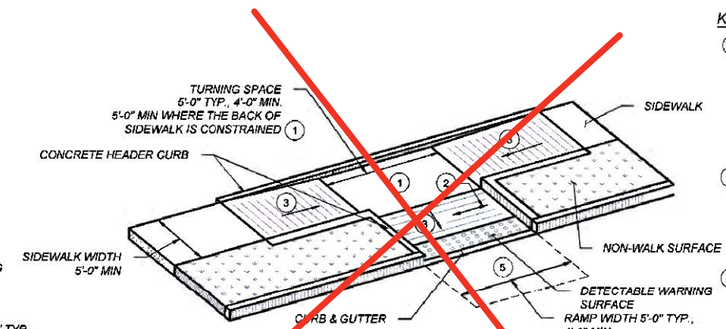

COMBINATION CURB RAMP (B)
SCALE: NONE

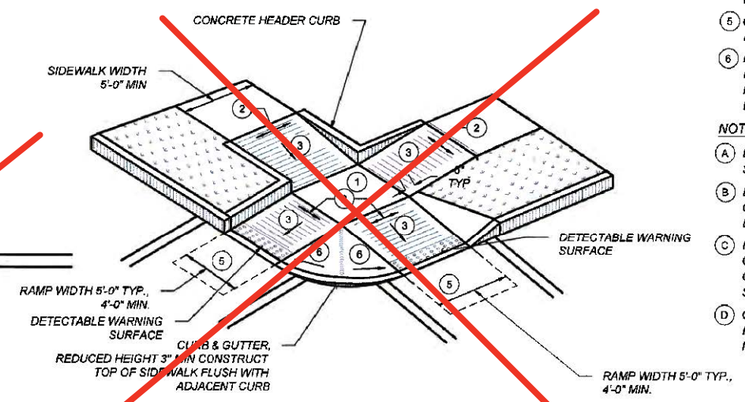

COMBINATION CURB RAMP (D)
WITH SHARED TURNING SPACE
SCALE: NONE

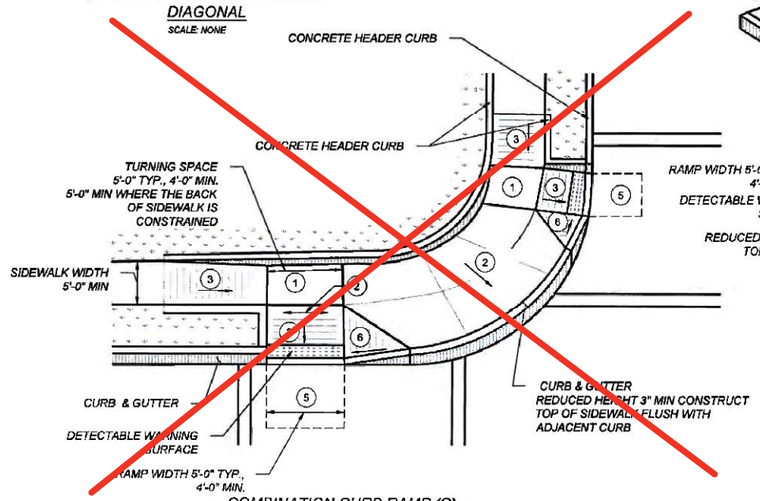

COMBINATION CURB RAMP (C)
SCALE: NONE

KEYED NOTES

1. TURNING SPACE SHALL HAVE MAXIMUM CROSS SLOPE AND LONGITUDINAL SLOPE OF 2.0% (RECOMMEND 1.5%). TURNING SPACE SHALL BE 4.0 FT BY 4.0 FT MIN (RECOMMEND 5.0 FT BY 5.0 FT) AT THE TOP OF THE CURB RAMP AND SHALL BE PERMITTED TO OVERLAP OTHER TURNING SPACES AND CLEAR SPACES. WHERE THE TURNING SPACE IS CONSTRAINED AT THE BACK OF SIDEWALK, THE TURNING SPACE SHALL BE 4.0 FT MIN BY 5.0 FT MIN. THE 5.0 FT SHALL BE PROVIDED IN THE DIRECTION OF THE RAMP RUN.
2. CROSS SLOPE SHALL BE 2.0% MAX (RECOMMENDED 1.5%). EXCEPTION: THE CROSS SLOPE OF CURB RAMPS AT PEDESTRIAN STREET CROSSING WITHOUT YIELD OR STOP CONTROL, TRAFFIC SIGNALS DESIGNED FOR THE GREEN PHASE, AND AT MIDBLOCK PEDESTRIAN STREET CROSSING, THE CROSS SLOPE IS PERMITTED TO MATCH STREET OR HIGHWAY GRADE.
3. RUNNING SLOPE OF THE CURB RAMP SHALL BE 8.3 % MAX (RECOMMENDED 7.0%) BUT SHALL NOT REQUIRE THE RAMP LENGTH TO EXCEED 15.0 FT TO AVOID CHASING THE SLOPE INDEFINITELY WHEN CONNECTING TO STEEP GRADES. WHEN APPLYING THE 15 FOOT MAX LENGTH, THE RUNNING SLOPE OF THE CURB RAMP SHALL BE EXTENDED AS FLAT AS MAXIMUM EXTENT PRACTICABLE.
4. GRADE BREAKS AT THE TOP AND BOTTOM OF CURB RAMPS RUNS SHALL BE PERPENDICULAR TO THE DIRECTION OF THE RAMP RUN. GRADE BREAKS SHALL NOT BE PERMITTED ON THE SURFACE OF RAMP RUNS AND TURNING SPACE. SURFACE SLOPES THAT MEET AT GRADE BREAKS SHALL BE FLUSH.
5. COUNTER SLOPE OF THE GUTTER OR STREET AT THE FOOT OF A CURB RAMP, RUN OR TURNING SPACE SHALL BE 5% MAX.
6. FLARED SIDES ARE TO HAVE A SLOPE OF 10% MAX (RECOMMEND 9%), MEASURED PARALLEL TO THE BACK OF THE CURB, UNLESS THE FLARED SIDES ARE PROTECTED FROM CROSS TRAVEL BY LANDSCAPING, STREET FURNITURE, CHAINS, FENCING, OR RAILINGS.

NOTES:

- (A) DO NOT SCORE OR MAKE GROOVES IN SLOPED SURFACE. LINES SHOWN ON STANDARD DETAILS ARE FOR ILLUSTRATION ONLY.
- (B) DETAILS OF THE DETECTABLE WARNING SURFACE ARE SHOWN IN THE CONSTRUCTION PLANS AND SHEET 608-001-8/12 OF THE STANDARD DRAWINGS.
- (C) IN ALTERATIONS WHERE EXISTING PHYSICAL CONSTRAINTS PREVENT COMPLIANCE TO PROVIDE A CURB RAMP FOR EACH PEDESTRIAN CROSSING A SINGLE DIAGONAL CURB RAMP SHALL BE PERMITTED TO SERVE BOTH PEDESTRIAN STREET CROSSINGS.
- (D) CONCRETE HEADER CURBS CONSTRUCTED AS PART OF THE CURB RAMP WILL BE CONSIDERED INCIDENTAL TO ITEM NUMBER 608004 AND NO SEPARATE PAYMENT WILL BE MADE.

MICHAEL J. SMELKER
NEW MEXICO
15350
LICENSED PROFESSIONAL ENGINEER
1-13-15

NO.	DATE	REV. BY	DESCRIPTION

REVISIONS (OR CHANGE NOTICES)

NEW MEXICO
DEPARTMENT OF TRANSPORTATION
STANDARD DRAWING

COMBINATION
CURB RAMPS

APPROVED: DESIGN ENGINEER 1-13-15 DATE

608-001-5 608- 5 of 12

file path

DRAWING SCALE = NOT TO SCALE

RioRancho City of Vision

PUBLIC WORKS DEPARTMENT
ENGINEERING DIVISION

PW2081 MEADOWLARK LANE
PEDESTRIAN PATH RECONSTRUCTION

DETAILS

SHEET
4 - 1

SUMMARY
FILENAME

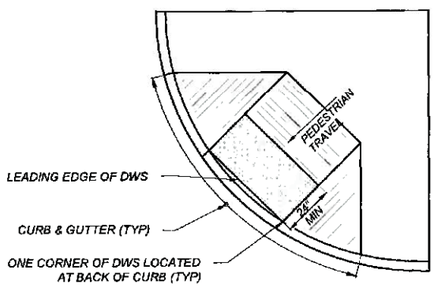

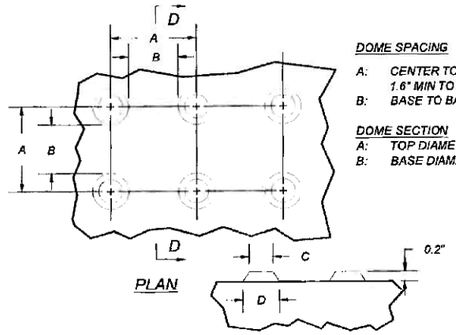

PLAN

SECTION D-D

DOME SPACING
A: CENTER TO CENTER SPACING 1.6" MIN TO 2.4" MAX
B: BASE TO BASE SPACING 0.65" MIN

DOME SECTION
A: TOP DIAMETER 50%-65% OF D
B: BASE DIAMETER 0.9" TO 1.4" MAX

DETECTABLE WARNING SURFACE (DWS)
TRUNCATED DOME DETAILS
SCALE NONE

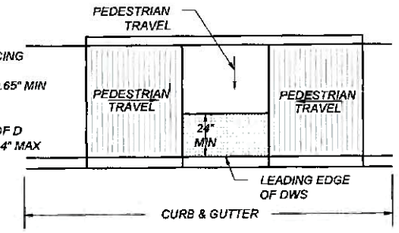

DETECTABLE WARNING SURFACE
SCALE NONE

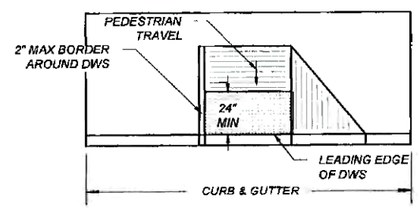

DETECTABLE WARNING SURFACE
SCALE NONE

DETECTABLE WARING SURFACE (DWS):

A STANDARDIZED TRUNCATED DOME GRID SURFACE BUILT IN OR APPLIED TO THE PEDESTRIAN ACCESS ROUTE TO WARN VISUALLY IMPAIRED PEOPLE OF HAZARDS. THE SURFACE IS PLACED WHERE DETECTABLE WARNING SURFACE (DWS): A STANDARDIZED TRUNCATED DOME GRID SURFACE BUILT IN OR APPLIED TO THE PEDESTRIAN ACCESS ROUTE TO WARN VISUALLY IMPAIRED PEOPLE OF HAZARDS. THE SURFACE IS PLACED WHERE PEDESTRIANS WILL ENCOUNTER THE PRESENCE OF HAZARDS IN THE LINE OF TRAVEL, SUCH AS THE EDGE OF ROADWAY AND AT-GRADE RAIL CROSSINGS, INDICATING THEY SHOULD STOP AND DETERMINE THE NATURE OF THE HAZARD BEFORE PROCEEDING.

LOCATION:

1. THE DETECTABLE WARNING SURFACE (DWS) SHALL BE 2.0 FT MINIMUM WIDTH AND EXTENDED THE FULL WIDTH OF THE CURB RAMP RUN, TURNING SPACE, BLENDED TRANSITION, AN EXCLUDING ANY THE FLARED SIDES
2. THE ROWS OF TRUNCATED DOMES SHALL BE ALIGNED TO BE PERPENDICULAR TO THE GRADE BREAK AT THE BACK OF THE CURB.
3. THE ROWS OF TRUNCATED DOMES SHALL BE ALIGNED TO BE PARALLEL TO THE DIRECTION OF TRAVEL.
4. IF CURB AND GUTTER ARE NOT PRESENT, SUCH AS A SHARED-USE PATH CONNECTION, THE DETECTABLE WARNING SURFACE SHALL BE PLACED AT THE PAVEMENT EDGE.
5. PEDESTRIAN REFUGE ISLANDS SHALL HAVE DETECTABLE WARNINGS. DETECTABLE WARNINGS AT CUT THROUGH ISLANDS SHALL BE SEPARATED BY A 24 INCH MINIMUM LENGTH OF THE WALKWAY WITHOUT MARKINGS.

   EXCEPTION: DETECTABLE WARNINGS SHALL NOT BE REQUIRED ON CUT THROUGH ISLANDS WHERE THE CROSSING IS LESS THAN 6 FT IN THE DIRECTION OF PEDESTRIAN TRAVEL.

NOTES:

1. DETAILS SPECIFIED ON THIS PLAN APPLY TO ALL CONSTRUCTION OR RECONSTRUCTION OF STREETS, CURBS, OR SIDEWALKS BY ALL PUBLIC AGENCIES AND BY ALL PRIVATE ORGANIZATIONS CONSTRUCTING FACILITIES FOR PUBLIC USE.
2. DETECTABLE WARNING SURFACE SHALL CONTRAST VISUALLY WITH ADJACENT GUTTER, WALKWAY SURFACES, EITHER LIGHT-ON-DARK OR DARK-ON-LIGHT FOR THE FULL WIDTH OF RAMP.
3. ALL PRODUCTS USED FOR DETECTABLE WARNING SURFACES SHALL BE ON THE DEPARTMENT'S APPROVED PRODUCT LIST.

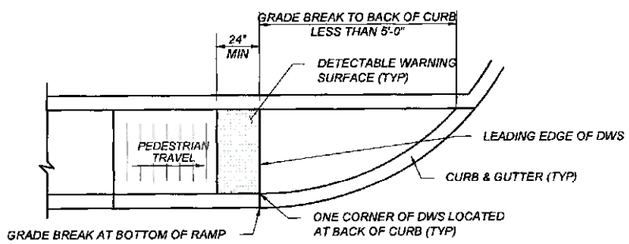

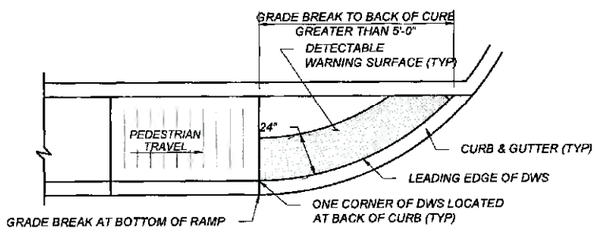

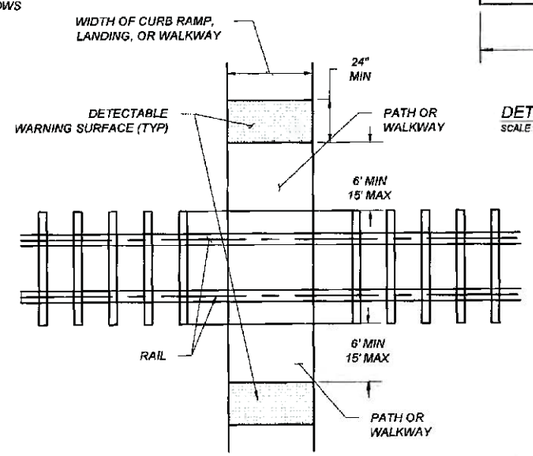

PEDESTRIAN AT-GRADE RAIL CROSSINGS
SCALE NONE

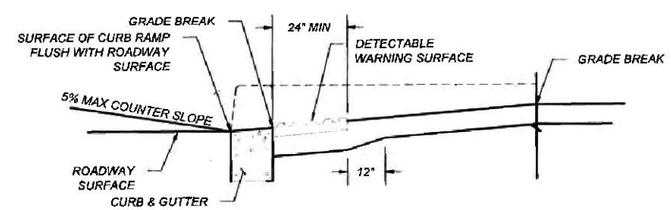

DETECTABLE WARNING SURFACE
SCALE NONE

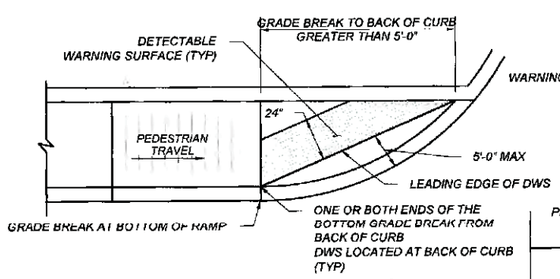

DETECTABLE WARNING SURFACE (DWS)ON CURVED SURFACES
SCALE NONE

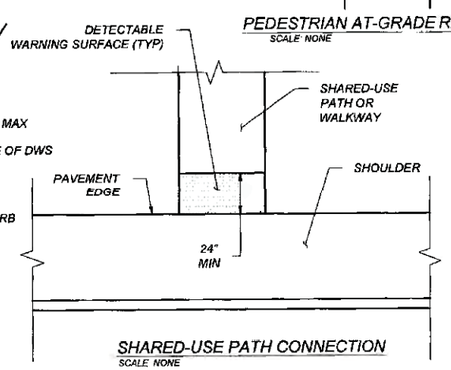

SHARED-USE PATH CONNECTION
SCALE NONE

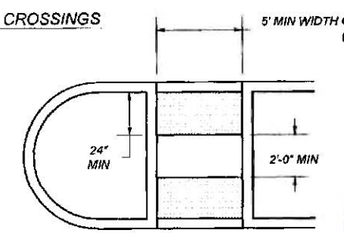

MEDIAN CUT-THROUGH
SCALE NONE

EXCEPTION: IF THE LENGTH BETWEEN TWO DWS SURFACE IS LESS THAN 2' THEN DETECTABLE WARNING SURFACE WILL NOT BE INSTALLED

MICHAEL J. SMELKER
NEW MEXICO
15350
LICENSED PROFESSIONAL ENGINEER
1-13-15

NO.	DATE	REV. BY	DESCRIPTION

REVISIONS (OR CHANGE NOTICES)

NEW MEXICO
DEPARTMENT OF TRANSPORTATION
STANDARD DRAWING

DETECTABLE WARNING SURFACE

APPROVED: DESIGN ENGINEER 1-13-15 DATE

608-001-8 608- 8 of 12

DRAWING SCALE = NOT TO SCALE

file path

RioRancho City of Vision

PUBLIC WORKS DEPARTMENT
ENGINEERING DIVISION

PW2081 MEADOWLARK LANE
PEDESTRIAN PATH RECONSTRUCTION

DETAILS

SHEET
4 - 2

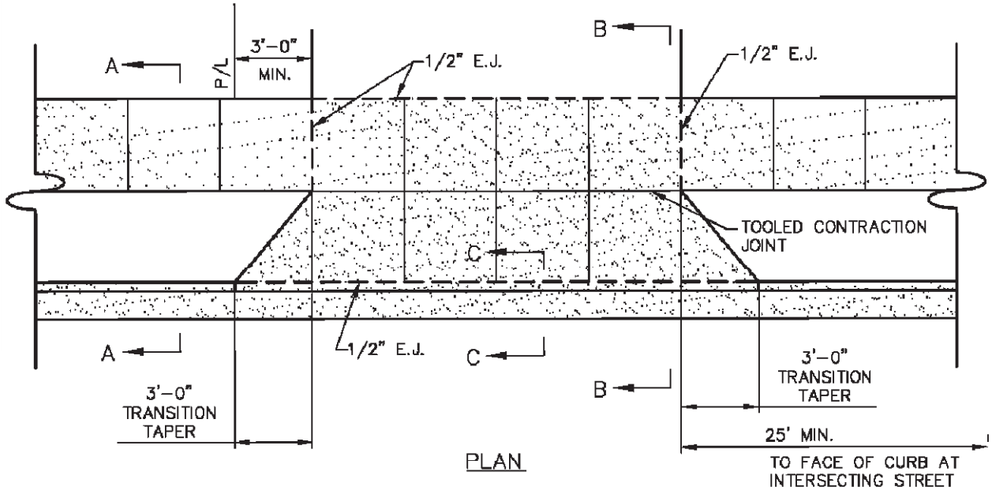

PLAN

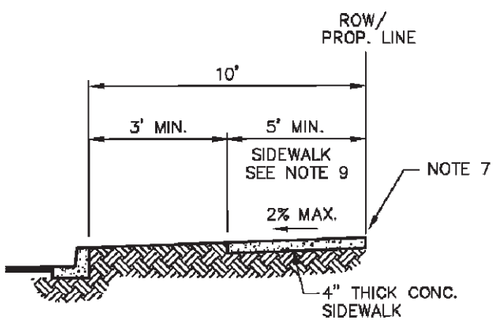

SECTION A-A

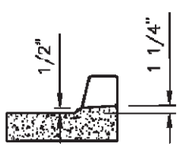

SECTION C-C

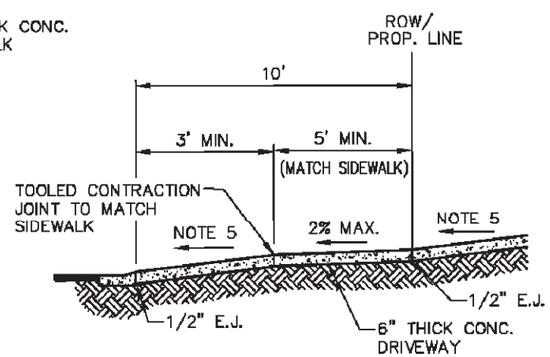

SECTION B-B

GENERAL NOTES:

1. ANY DEVIATIONS FROM THESE STANDARDS SHALL BE SUBMITTED TO THE CITY FOR PRIOR APPROVAL.
2. ALL WORK IN PUBLIC RIGHT-OF-WAY SHALL BE CONSTRUCTED BY A LICENSED CONTRACTOR AND REQUIRES PERMIT AND APPROVAL BY THE CITY.
3. WITHIN LIMITS OF THE RIGHT-OF-WAY, SIDEWALK AND DRIVEWAY SHALL BE PORTLAND CEMENT CONCRETE PLACED ON 6" PREPARED SUBGRADE. SUBGRADE SHALL BE COMPACTED TO 95% ASTM D 1557, MIN.
4. ASPHALT DRIVEWAY WILL NOT BE PERMITTED WITHIN RIGHT-OF-WAY.
5. 14% MAX. SLOPE FOR RESIDENTIAL DRIVEWAYS.
6. FOR CONC. SIDEWALK CONSTRUCT TRANSVERSE JOINTS AS FOLLOWS:
   - TOOLED CONTRACTION JOINTS AT 5' INTERVALS
   - 1/2" PRE-MOLDED BITUMINOUS EXPANSION JOINTS AT 15' INTERVALS.
7. SIDEWALK SETBACK IS REQUIRED WHERE ROW/PROPERTY WALL EXISTS OR IS PLANNED. REFER TO DWG. NO. TS-01 FOR SETBACK REQUIREMENTS.
8. SIDEWALK SHALL NOT BE TAPERED OR WARPED AT DRIVEWAY APPROACH.
9. THE MINIMUM SIDEWALK WITHIN PUBLIC RIGHT-OF-WAY IS:
   - 5' WIDE ON RES. & STD. COLLECTOR STREETS NOT ADJACENT TO COMMERCIAL PROPERTIES.
   - 6' WIDE ON ARTERIAL STREETS AND STREETS ADJACENT TO COMMERCIAL PROPERTIES
10. CONTRACTOR SHALL SET FORMS AT 1.5%.

GENERAL NOTES CONT'D:

11. ALL CONCRETE SHALL BE IN ACCORDANCE WITH SECTION 510 OF THE NMDOT STANDARD SPECIFICATIONS FOR HIGHWAY AND BRIDGE CONSTRUCTION, CURRENT EDITION. A VALID NMDOT MIX DESIGN CONFORMING TO THE REQUIREMENTS OF SECTION 509 OF THE NMDOT SPECIFICATIONS SHALL BE SUBMITTED TO THE CITY AND APPROVED PRIOR TO PLACEMENT OF CONCRETE. THE CITY MAY APPROVE A MIX DESIGN FOLLOWING NMAPWA SPECIFICATIONS

DATE MODIFIED: AUG 15, 2018

City of Rio Rancho
Department of Public Works

SIDEWALK AND DRIVEWAY TRANSITION (RESIDENTIAL)

DWG. NO. DW-01 OCT 2, 2008

RioRancho City of Vision

PUBLIC WORKS DEPARTMENT
ENGINEERING DIVISION

PW2081 MEADOWLARK LANE
PEDESTRIAN PATH RECONSTRUCTION

DETAILS

SHEET
4 - 3

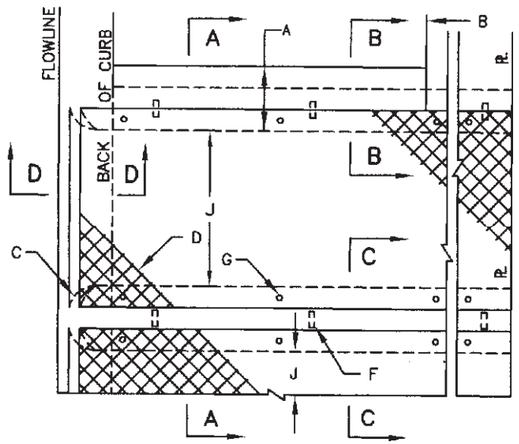

PLAN
SINGLE AND OR MULTIPLE CULVERT

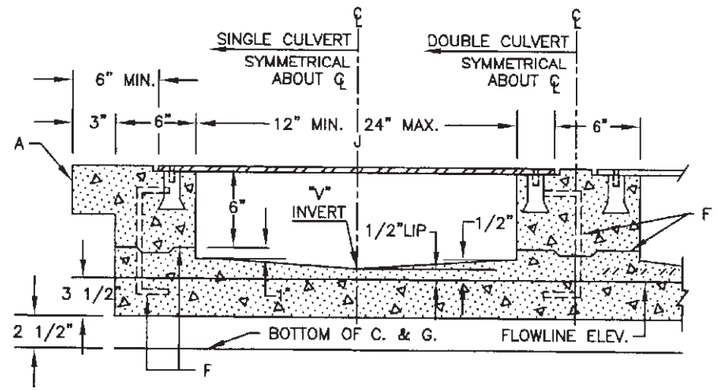

SECTION A–A

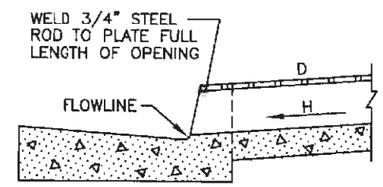

SECTION D–D

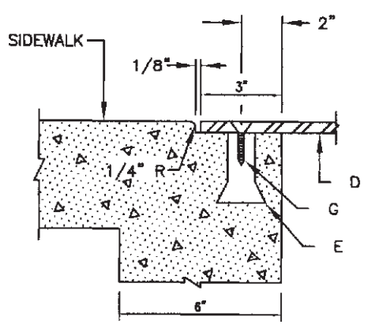

SECTION B–B

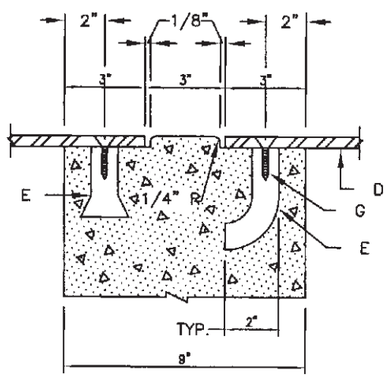

SECTION C–C

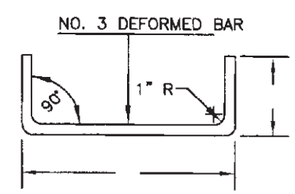

DOWEL DETAIL

DRAINAGE
SIDEWALK CULVERT WITH STEEL PLATE TOP
SCALE: NONE

SIDEWALK CULVERT NOTES:

1. PLACING OF DRAIN THRU EXIST. SIDEWALK AND CURB & GUTTER REQUIRES THAT ENTIRE SIDEWALK AND C & G STONES BE REMOVED AND REPLACED AS DETAILED HEREIN.
2. BOTTOM SLAB OF CULVERT SHALL BE POURED MONOLITHICALLY WITH NEW GUTTER.
3. THE INVERT SHALL BE TROWELED TO PRODUCE A HARD POLISHED SURFACE OF MAX. DENSITY AND SMOOTHNESS. INVERT SHALL BE V-SHAPED TO WITHIN 3" OF OUTLET, THEN WARPED TO PARALLEL FLOWLINE AT OUTLET. UNLESS OTHERWISE SHOWN.
4. ALL EXPOSED CONC. SURFACE SHALL MATCH GRADE, COLOR, FINISH AND SCORING OF ADJACENT CURB AND SIDEWALK.
5. SIDEWALK REPLACED DURING CONSTRUCTION SHALL BE POURED MONOLITHICALLY WITH CULVERT WALLS.
6. IF ROD ANCHORS ARE USED, DRILL & TAP FOR F.H. MACHINE SCREW. ATTACH ANCHORS TO PLATE AND SECURE PLATE IN PLACE PRIOR TO POURING OF WALLS.
7. LENGTH OF EACH PLATE SHALL BE SUCH THAT THE WEIGHT WILL NOT EXCEED 300 LBS. AND SHALL BE STRESS RELIEVED AFTER FABRICATION. CLEAN SURFACE OF PLATE AND FRAMING MEMBERS AND PAINT W/ ONE SHOP COAT RED OXIDE AND TWO FINISH COATS ALUMINUM PAINT (AASHTO M 69).

SIDEWALK CULVERT CONSTRUCTION NOTES:

A. MATCH NEAREST CONTROL JOINT, INSTALL 1/2" EXPANSION JOINT.
B. EDGE OF SIDEWALK OR SETBACK (VARIABLE).
C. 3" RADIUS (TYPICAL).
D. 3/8" CHECKERED STEEL PLATE (PAINT PER NOTE 7, ABOVE).
E. FOR SECURING PLATE USE 1" X 5" S.S. ROD ANCHOR, "RED HEAD MULTI-SET II SRM-38 ANCHOR" OR APPROVED EQUAL. INSTALL PER MANUFACTURER'S INSTRUCTIONS AT MAX. 24" O.C., A MINIMUM OF 2 PER SIDE AND ONE WITHIN 6" OF EACH END.
F. CONSTRUCTION JOINT IS OPTIONAL. IF USED, SPACE DOWELS AT 18" O.C. MAX., 1 1/2" MINIMUM FROM FACE OF CONCRETE.
G. 3/8" – 16 X 1 1/4" COUNTERSUNK, F.H., STAINLESS STEEL, MACHINE SCREW.
H. SLOPE 1/4" PER FT. MIN.
J. DRAIN WIDTH PER PLAN (12" MIN., 24" MAX.).

REVISIONS	NM APWA
	DRAINAGE SIDEWALK CULVERT WITH STEEL PLATE TOP DWG. 2236 FEB. 2006

Rio Rancho City of Vision

PUBLIC WORKS DEPARTMENT
ENGINEERING DIVISION

PW2081 MEADOWLARK LANE
PEDESTRIAN PATH RECONSTRUCTION

DETAILS

SHEET
4 - 4